(12) INTERNATIONAL APPLICATION PUBLISHED UNDER THE PATENT COOPERATION TREATY (PCT)

(19) World Intellectual Property Organization
International Bureau

(43) International Publication Date
29 November 2007 (29.11.2007)

PCT

(10) International Publication Number
WO 2007/135504 A1

(51) International Patent Classification:
F04C 19/00 (2006.01)

(21) International Application Number:
PCT/IB2007/001250

(22) International Filing Date: 15 May 2007 (15.05.2007)

(25) Filing Language: English

(26) Publication Language: English

(30) Priority Data:
60/801,913 19 May 2006 (19.05.2006) US
11/549,094 12 October 2006 (12.10.2006) US

(71) Applicant *(for all designated States except US)*: **L'AIR LIQUIDE-SOCIETE ANONYME POUR L'ETUDE ET L'EXPLOITATION DES PROCEDES GEORGES CLAUDE** [FR/FR]; 75 quai d'Orsay, F-75321 Paris Cedex 07, F-75321 Paris (FR).

(72) Inventors; and

(75) Inventors/Applicants *(for US only)*: **URQUHART, Karl J.** [US/US]; 911 Muir Woods Dr., Allen, Texas 75002 (US). **GUARNERI, George** [FR/FR]; 38 residence Pre Novel, F-38420 Le Versoud (FR). **MARC, Jean-Louis** [FR/FR]; 1, Lot Pelissier, F-11700 La Redorte (FR). **FANJAT, Norbert** [FR/US]; 7901 Thorny Wood Dr., Plano, Texas 75240 (US). **LANGELLIER, Laurent** [FR/US]; 7219 Valley View Place, Dallas, 75240 (US). **COLIN, Christophe** [FR/US]; 4128 Ambrosia Lane, Plano, Texas 75093 (US).

(74) Agent: **HAYNES, ELWOOD L.**; Air Liquide, 2700 Post Oak Blvd., Suite 1800, Houston, TX 77056 (US).

(81) Designated States *(unless otherwise indicated, for every kind of national protection available)*: AE, AG, AL, AM, AT, AU, AZ, BA, BB, BG, BH, BR, BW, BY, BZ, CA, CH, CN, CO, CR, CU, CZ, DE, DK, DM, DZ, EC, EE, EG, ES, FI, GB, GD, GE, GH, GM, GT, HN, HR, HU, ID, IL, IN, IS, JP, KE, KG, KM, KN, KP, KR, KZ, LA, LC, LK, LR, LS, LT, LU, LY, MA, MD, MG, MK, MN, MW, MX, MY, MZ, NA, NG, NI, NO, NZ, OM, PG, PH, PL, PT, RO, RS, RU, SC, SD, SE, SG, SK, SL, SM, SV, SY, TJ, TM, TN, TR, TT, TZ, UA, UG, US, UZ, VC, VN, ZA, ZM, ZW.

(84) Designated States *(unless otherwise indicated, for every kind of regional protection available)*: ARIPO (BW, GH, GM, KE, LS, MW, MZ, NA, SD, SL, SZ, TZ, UG, ZM, ZW), Eurasian (AM, AZ, BY, KG, KZ, MD, RU, TJ, TM), European (AT, BE, BG, CH, CY, CZ, DE, DK, EE, ES, FI, FR, GB, GR, HU, IE, IS, IT, LT, LU, LV, MC, MT, NL, PL, PT, RO, SE, SI, SK, TR), OAPI (BF, BJ, CF, CG, CI, CM, GA, GN, GQ, GW, ML, MR, NE, SN, TD, TG).

Declaration under Rule 4.17:

— *as to applicant's entitlement to apply for and be granted a patent (Rule 4.17(ii))*

[Continued on next page]

(54) Title: SYSTEMS AND METHODS FOR MANAGING FLUIDS USING A LIQUID RING PUMP

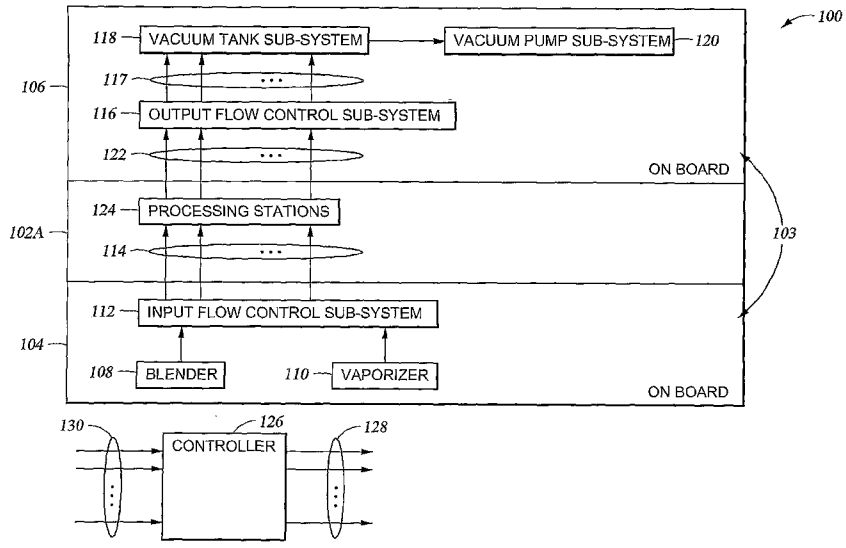

(57) Abstract: Methods and systems for chemical management. In one embodiment, a blender is coupled to a processing system and configured to supply an appropriate solution or solutions to the system. Solutions provided by the blender are then reclaimed from the system and subsequently reintroduced for reuse. The blender may be operated to control the concentrations of various constituents in the solution prior to the solution being reintroduced to the system for reuse. Some chemicals introduced to the system may be temperature controlled. A back end vacuum pump subsystem separates gases from liquids as part of a waste management system.

WO 2007/135504 A1

Published:

— *with international search report*

— *before the expiration of the time limit for amending the claims and to be republished in the event of receipt of amendments*

For two-letter codes and other abbreviations, refer to the "Guidance Notes on Codes and Abbreviations" appearing at the beginning of each regular issue of the PCT Gazette.

SYSTEMS AND METHODS FOR MANAGING FLUIDS USING A LIQUID RING PUMP

Background

Field of the Invention

This disclosure pertains to methods and systems for the management of chemicals in processing environments, such as semiconductor fabrication environments.

Related Art

In various industries, chemical delivery systems are used to supply chemicals to processing tools. Illustrative industries include the semiconductor industry, pharmaceutical industry, biomedical industry, food processing industry, household product industry, personal care products industry, petroleum industry and others.

The chemicals being delivered by a given chemical delivery system depend, of course, on the particular processes being performed. Accordingly, the particular chemicals supplied to semiconductor processing tools depend on the processes being performed on wafers in the tools. Illustrative semiconductor processes include etching, cleaning, chemical mechanical polishing (CMP) and wet deposition (e.g., chemical vapor deposition, electroplating, etc.).

Commonly, two or more fluids are combined to form a desired solution for a particular process. The solution mixtures can be prepared off-site and then shipped to an end point location or a point-of-use for a given process. This approach is typically referred to as batch processing or batching. Alternatively, and more desirably, the cleaning solution mixtures are prepared at the point-of-use with a suitable mixer or blender system prior to delivery to the cleaning process. The latter approach is sometimes referred as continuous blending.

In either case, accurate mixing of reagents at desired ratios is particularly important because variations in concentration of the chemicals detrimentally affect

CONFIRMATION COPY

process performance. For example, failure to maintain specified concentrations of chemicals for an etch process can introduce uncertainty in etch rates and, hence, is a source of process variation.

In today's processing environments, however, mixing is only one of many aspects that must be controlled to achieve a desired process result. For example, in addition to mixing, it may be desirable or necessary to control removal of chemicals from a processing environment. It may also be desirable or necessary to control temperatures of chemical solutions at various stages in the processing environment. Currently, chemical management systems are not capable of adequately controlling a plurality of process parameters for certain applications.

Therefore, there is a need for methods and systems for managing chemical conditioning and supply in processing environments.

Summary

One embodiment provides a vacuum pump system including a vacuum line fluidly coupled to at least one of a plurality of fluid outlets of a processing station; a liquid ring pump having a suction port coupled to the vacuum line to receive an incoming multiphase stream formed from one or more fluids removed from the plurality of fluid outlets; a tank coupled to an exhaust port of the liquid ring pump and comprising one or more devices configured for removing liquid from a multiphase stream output by the liquid ring pump through the exhaust port; and a pressure control system disposed in the vacuum line upstream from the liquid ring pump, wherein the pressure control system is configured to maintain a target pressure in the vacuum line according to a desired pressure in the processing station.

Another embodiment provides a vacuum pump system including a vacuum line fluidly coupled to at least one of a plurality of fluid outlets of a processing station; a liquid ring pump having a suction port coupled to the vacuum line to receive an incoming multiphase stream formed from one or more fluids removed from the plurality of fluid outlets; a tank coupled to an exhaust port of the liquid ring pump and comprising one or more devices configured for removing liquid

from a multiphase stream output by the liquid ring pump through the exhaust port; and a coolant source for injecting a cooling fluid into the incoming multi-phase stream prior to the multiphase stream being input to the liquid ring pump, the cooling fluid having a temperature sufficient to condense liquid from the multiphase stream.

Another embodiment provides a vacuum pump system including a vacuum line fluidly coupled to at least one of a plurality of fluid outlets of a processing station; a liquid ring pump having a suction port coupled to the vacuum line to receive an incoming multiphase stream formed from one or more fluids removed from the plurality of fluid outlets; a tank coupled to an exhaust port of the liquid ring pump and comprising one or more devices configured for removing liquid from a multiphase stream output by the liquid ring pump through the exhaust port; and a chemical concentration control system. The chemical concentration control system is configured to: monitor a concentration of a sealant fluid contained in the tank and fed to the liquid ring pump for the operation of the liquid ring pump; and selectively adjust a concentration of the sealant fluid.

Another embodiment provides a vacuum pump system including a vacuum line fluidly coupled to at least one of a plurality of fluid outlets of a processing station; a liquid ring pump having a suction port coupled to the vacuum line to receive an incoming multiphase stream formed from one or more fluids removed from the plurality of fluid outlets; a tank coupled to an exhaust port of the liquid ring pump and comprising one or more devices configured for removing liquid from a multiphase stream output by the liquid ring pump; a pressure control system disposed in the vacuum line upstream from the liquid ring pump, wherein the pressure control system is configured to maintain a target pressure in the vacuum line according to a desired pressure in the processing station; and a chemical concentration control system. The chemical concentration control system is configured to: monitor a concentration of a sealant fluid contained in the tank and fed to the liquid ring pump for the operation of the liquid ring pump; and selectively adjust a concentration of the sealant fluid. The system further includes a coolant source for injecting a coolant into the incoming multiphase stream prior

to the multiphase stream being input to the liquid ring pump, the coolant having a temperature sufficient to condense liquid from the multiphase stream.

Another embodiment provides a processing system including a chemical blender configured to be selectively and alternately coupled to fluid inlets associated with a first and a second processing station by operation of a flow control unit, so that while the chemical blender is coupled to a first fluid inlet associated with the first processing station the chemical blender is decoupled from a second fluid inlet associated with the second processing station, and vice versa; a plurality of fluid outlets from the processing stations; and a vacuum pump system fluidly coupled to at least one of the plurality of fluid outlets via at least a vacuum line. The vacuum pump system includes a liquid ring pump having a suction port coupled to the vacuum line to receive an incoming multiphase stream formed from one or more fluids removed from the plurality of fluid outlets; and a tank coupled to an exhaust port of the liquid ring pump and comprising one or more devices configured for removing liquid from a multiphase stream output by the liquid ring pump through the exhaust port.

Brief Description of the Drawings

For a further understanding of the nature and objects of the present invention, reference should be made to the following detailed description, taken in conjunction with the accompanying drawings, in which like elements are given the same or analogous reference numbers and wherein:

Figure 1 is a diagram of a processing system illustrating onboard components, according to one embodiment of the present invention.

Figure 2 is a diagram of a processing system illustrating onboard and off-board components, according to another embodiment of the present invention.

Figure 3 is a diagram of a semiconductor fabrication system, according to one embodiment of the present invention.

Figure 4 is a diagram of a processing system, according to one embodiment of the present invention.

Figure 5 is a schematic diagram of an exemplary embodiment of a semiconductor wafer cleaning system including a cleaning bath connected with a point-of-use process control blender system that prepares and delivers a cleaning solution to the cleaning bath during a cleaning process.

Figure 6 is a schematic diagram of an exemplary embodiment of the process control blender system of Figure 5.

Figure 7 is a diagram of a processing system having an off-board blender, according to one embodiment of the present invention.

Figure 8A is a diagram of a processing system having a reclamation system, according to one embodiment of the present invention.

Figure 8B is a diagram of a processing system having a reclamation system, according to one embodiment of the present invention.

Figure 8C is a diagram of a processing system having a reclamation system, according to one embodiment of the present invention.

Figure 9 is a diagram of a vacuum pump system, according to one embodiment of the present invention.

Description of Preferred Embodiments

Embodiments of the present invention provide methods and chemical management systems for controlling various aspects of fluid delivery and/or recovery.

SYSTEMS OVERVIEW

Figure 1 shows one embodiment of a processing system **100**. Generally, the system **100** includes a processing chamber **102** and a chemical management

system **103**. According to one embodiment, the chemical management system **103** includes an input subsystem **104** and an output subsystem **106**. It is contemplated that any number of the components of the subsystems **104**, **106** may be located onboard or off-board, relative to the chamber **102**. In this context, "onboard" refers to the subsystem (or component thereof) being integrated with the chamber **102** in the Fab (clean room environment), or more generally with a processing tool of which the chamber **102** is a part; while "off-board" refers to the subsystem (or component thereof) being separate from, and located some distance away from, the chamber **102** (or tool, generally). In the case of the system **100** shown in Figure 1, the subsystems **104**, **106** are both onboard, such that the system **100** forms an integrated system which may be completely disposed in a Fab. Accordingly, the chamber **102** and the subsystems **104**, **106** may be mounted to a common frame. To facilitate cleaning, maintenance and system modifications the subsystems may be disposed on detachable subframes supported by, for example, casters so that the subsystems may be easily disconnected and rolled away from the chamber **102**.

Illustratively, the input subsystem **104** includes a blender **108** and a vaporizer **110** fluidly connected to an input flow control system **112**. In general, the blender **108** is configured to mix two or more chemical compounds (fluids) to form a desired chemical solution, which is then provided to the input flow control system **112**. The vaporizer **110** is configured to vaporize a fluid and provide the vaporized fluid to the input flow control system **112**. For example, the vaporizer **110** may vaporize isopropyl alcohol and then combine the vaporized fluid with a carrier gas, such as nitrogen. The input flow control system **112** is configured to dispense the chemical solution and/or vaporized fluid to the chamber **102** at desired flow rates. To this end, the input flow control system **112** is coupled to the chamber **102A** by a plurality of input lines **114**. In one embodiment, the chamber **102A** is configured with a single processing station **124** at which one or more processes can be performed on a wafer located at the station **124**. Accordingly, the plurality of input lines **114** provide the appropriate chemistry (provided by the blender **108** via the input flow control system **112**) required for performing a given process at the station **124**. In one embodiment, the station **124** may be a bath, i.e., a vessel containing a chemical solution in which a wafer is immersed for a

period of time and then removed. However, more generally, the station **124** may be any environment in which one or more surfaces of a wafer are exposed to one or more fluids provided by the plurality of input lines **114**. Further, it is understood that while Figure 1 shows a single processing station, the chamber **102A** may include any number of processing stations, as will be described in more detail below with respect to Figure 2.

Illustratively, the output subsystem **106** includes an output flow control system **116**, a vacuum tanks subsystem **118** and a vacuum pumps subsystem **120**. A plurality of output lines **122** fluidly couple the chamber **102A** to the output flow control system **116**. In this way, fluids are removed from the chamber **102A** via the plurality of output lines **122**. The removed fluids may then be sent to drain, or to the vacuum tanks subsystem **118** via fluid lines **117**. In one embodiment, some fluids are removed from the vacuum tanks subsystem **118** and routed to the vacuum pump subsystem **120** for conditioning (e.g., neutralization or dilution) as part of a waste management process.

In one embodiment, the input subsystem **104** and the output subsystem **106** independently or cooperatively effect a plurality of process control objectives. For example, solution concentration may be monitored and controlled at various stages from the blender **108** to the chamber **102A**. In another embodiment, the output flow control system **116**, the vacuum tanks subsystem 118 and/or the vacuum pumps subsystem **120** cooperate to control a desired fluid flow over a surface of a wafer disposed in the chamber **102A**. In another embodiment, the output flow control system **116** and a vacuum pumps subsystem **120** cooperate to condition fluids removed from the chamber **102A** by the output flow control system **116** and then return the conditioned fluids to the blender **108**. These and other embodiments are described in more detail below.

In one embodiment, transfer means (e.g., robots) are disposed inside and/or proximate the chamber **102A** to move wafers into, through and out of the chamber **102**. The chamber **102A** may also be part of a larger tool, as will be described below.

In one embodiment, the various controllable elements of the system **100** are manipulated by a controller **126**. The controller **126** may be any suitable device capable of issuing control signals **128** to one or more controllable elements of the system **100**. The controller **126** may also receive a plurality of input signals **130**, which may include concentration measurements of solution in the system at different locations, level sensor outputs, temperature sensor outputs, flow meter outputs, etc. Illustratively, the controller **126** may be a microprocessor-based controller for a programmable logic controller (PLC) program to implement various process controls including, in one embodiment, a proportional-integral-derivative (PID) feedback control. An exemplary controller that is suitable for use in the process control blender system is a PLC Simatic S7-300 system commercially available from Siemens Corporation (Georgia). Although the controller **126** is shown as a singular component, it is understood that the controller **126** may in fact be a plurality of control units collectively forming the control system for the processing system **100**.

As noted above, one or more of the components of the system **100** may be located off-board relative to the chamber **102A** (or the overall tool of which the chamber **102A** is a part). Figure 2 shows one such configuration of a processing system **200** having off-board components relative to a chamber **102B**. Like numerals refer to components previously described with respect to Figure 1. Illustratively, the blender **108**, the vacuum tanks subsystem **118** and the vacuum pumps subsystem **120** are located off-board. In contrast, the vaporizer **110**, the input flow control system **112**, and the output flow control system **116** are shown as onboard components, as in Figure 1. The off-board components may be located in the Fab with the processing tool (i.e., a processing chamber **102B** and any other integrated components which may form a processing tool) or in a sub-fab. It should be understood that the configuration of the system **200** in Figure 2 is merely illustrative and other configurations are possible and contemplated. For example, the system **200** may be configured such that the vacuum tanks subsystem **118** is onboard, while the vacuum pumps subsystem **120** is off-board. Collectively, the blender **108**, the vaporizer **110**, the input flow control subsystem **112**, the output flow control subsystem **116**, the vacuum tanks subsystem **118** and a vacuum pumps subsystem **120** make up the chemical management system **103**,

according to one embodiment of the present invention. It should be noted, however, that the chemical management systems described with respect to Figure 1 and Figure 2 are merely illustrative. Other embodiments within the scope of the present invention may include more or less components and/or different arrangements of those components. For example, in one embodiment of the chemical management system the vaporizer **110** is not included.

The system **200** of Figure 2 also illustrates an embodiment of a multi-station chamber **102B**. Accordingly, Figure 2 shows the processing chamber **102B** having five stations $\mathbf{204}_{1\text{-}5}$ (individually(collectively) referred to as station(s) **204**). More generally, however, the chamber **102B** may have any number of stations (i.e., one or more stations). In one embodiment, the stations can be isolated from one another by sealing means (e.g., actuatable doors disposed between the processing stations). In a particular embodiment, the isolation means are vacuum tight so that the processing stations may be kept at different pressure levels.

Each station **204** may be configured to perform a particular process on a wafer. The process performed at each station may be different and, therefore, require different chemistry provided by the blender **108** via the input flow control system **112**. Accordingly, the system **200** includes a plurality of input line sets $\mathbf{206}_{1\text{-}5}$, each set corresponding to a different station. In the illustrative embodiment of Figure 2, five sets $\mathbf{206}_{1\text{-}5}$ of input lines are shown for each of the five processing stations. Each input line set is configured to provide an appropriate combination of chemicals to a given station. For example, in one embodiment, the chamber **102B** is a cleaning module for cleaning wafers before and between, e.g., etching processes. In this case, the input line set $\mathbf{206}_1$ for a first processing station $\mathbf{204}_1$ may provide a combination of a SC-1 type solution (which includes a mixture of ammonium hydroxide and hydrogen peroxide in deionized water) and deionized water (DIW). The input line set $\mathbf{206}_2$ for a second processing station $\mathbf{204}_2$ may provide one or more of deionized water (DIW) and isopropyl alcohol (IPA). The input line set $\mathbf{206}_3$ for a third processing station $\mathbf{204}_3$ may provide one or more of deionized water, diluted hydrogen fluoride, and isopropyl alcohol. The input line set $\mathbf{206}_4$ for a fourth processing station $\mathbf{204}_4$ may

provide one or more of deionized water, known mixed chemical solutions, proprietary chemical solutions of a specific nature and isopropyl alcohol. The input line set **206**$_5$ for a fifth processing station **204**$_5$ may provide one or more of deionized water, SC-2 type solution (which includes an aqueous mixture of hydrogen peroxide with hydrochloric acid) and isopropyl alcohol. As in the case of the system **100** described with respect to Figure 1, the stations **204** may be any environment in which one or more surfaces of a wafer are exposed to one or more fluids provided by the plurality of input lines **114**.

It is contemplated that fluid flow through the input lines in a given set **206** (as well as the lines **114** of Figure 1) may be individually controlled. Accordingly, the timing and a flow rate of fluids through the individual lines of a given set may be independently controlled. Further, while some of the input lines provide fluids to a wafer surface, other fluids may be provided to the internal surfaces of a processing station **204** for the purpose of cleaning the surfaces, e.g., before or after a processing cycle. Further, the input lines shown in Figure 2 are merely illustrative and other inputs may be provided from other sources.

Each of the processing stations **204**$_{1\text{-}5}$ has a corresponding output line or set of output lines, whereby fluids are removed from the respective processing stations. Illustratively, the first processing stations **204**$_1$ is coupled to a drain **208**, while the second through the fourth processing stations **204**$_{2\text{-}4}$ are shown coupled to the output flow control system **116** via respective output line sets **210**$_{1\text{-}4}$. Each set is representative of one or more output lines. In this way, fluids are removed from the chamber **102A** via the plurality of output lines **122**. The fluids removed from the processing stations via the output line sets **210**$_{1\text{-}4}$ coupled to the output flow control system **116** may be routed to the vacuum tanks subsystem **118** via a plurality of fluid lines **117**.

In one embodiment, transfer means (e.g., robots) are disposed inside and/or proximate the chamber **102B** to move wafers into, through, and out of the chamber **102B**. The chamber **102B** may also be part of a larger tool, as will now be described below with respect to Figure 3.

Referring now to Figure 3, a plan view of a processing system **300** is shown, according to one embodiment of the present invention. The processing system **300** includes a front end section **302** for receiving wafer cassettes. The front end section **302** interfaces with a transfer chamber **304** housing a transfer robot **306**. Cleaning modules **308**, **310** are disposed on either side of the transfer chamber **304**. The cleaning modules **308**, **310** may each include a processing chamber (single station or multi-station), such as those cleaning chambers **102A-B** described above with respect to Figure 1 and Figure 2. The cleaning modules **308**, **310** include and/or are coupled to the various components of the chemical management system **103** described above. (The chemical management system **103** is shown in dashed lines to represent the fact that some components of the chemical management system may be located onboard the processing system **300** and other components may be located off-board; or all components can be located onboard.) Opposite the front end section **302**, the transfer chamber **304** is coupled to a processing tool **312**.

In one embodiment, the front and section **302** may include load lock chambers which can be brought to a suitably low transfer pressure and then opened to the transfer chamber **304**. The transfer robot **306** then withdraws individual wafers from the wafer cassettes located in the load lock chambers and transfers the wafers either to the processing tool **312** or to one of the cleaning modules **308**, **310**. During operation of the system **300**, the chemical management system **103** controls the supply and removal of fluids to/from the cleaning modules **308**, **310**.

It is understood that the system **300** is merely one embodiment of a processing system having the chemical management system of the present invention. Accordingly, embodiments of the chemical management system are not limited to configurations such as that shown in Figure 3, or even to semiconductor fabrication environments.

SYSTEMS AND PROCESS CONTROL

Referring now to Figure 4, a processing system **400** is shown with respect to which additional embodiments of a chemical management system will now be described. For convenience, the additional embodiments will be described with respect to a multi-station chamber system, such as the system **200** shown in Figure 2 and described above. It is understood, however, that the following embodiments also apply to the system **100** shown in Figure 1. Further, it is noted that the order of the processing stations **204** in Figure 4 is not necessarily reflective of the order in which processing is performed on a given wafer, but rather is arranged for convenience of illustration. For convenience, like reference numbers correspond to like components previously described with respect to Figure 1 and/or 2 and will not be described in detail again.

The blender **108** of the system **400** is configured with a plurality of inputs $\mathbf{402}_{1\text{-}N}$ (collectively inputs **402**) each receiving a respective chemical. The inputs **402** are fluidly coupled to a primary supply line **404**, wherein the respective chemicals are mixed to form a solution. In one embodiment, the concentrations of the various chemicals are monitored at one or more stages along the supply line **404**. Accordingly, Figure 4 shows a plurality of chemical monitors $\mathbf{406}_{1\text{-}3}$ (three shown by way of illustration) disposed in-line along the supply line **404**. In one embodiment, a chemical monitor is provided at each point in the supply line **404** where two or more chemicals are combined and mixed. For example, a first chemical monitor $\mathbf{406}_1$ is disposed between a point where the first and second chemicals (inputs $\mathbf{402}_{1\text{-}2}$) are mixed and a point (i.e., upstream from) where a third chemical (input $\mathbf{402}_3$) is introduced into the supply line **404**. In one embodiment, the concentration monitors **406** used in the system are electrode-less conductivity probes and/or Refraction Index (RI) detectors including, without limitation, AC toroidal coil sensors such as the types commercially available under the model 3700 series from GLI International, Inc. (Colorado), RI detectors such as the types commercially available under the model CR-288 from Swagelok Company (Ohio), and acoustic signature sensors such as the types commercially available from Mesa Laboratories, Inc. (Colorado).

The blender **108** is selectively fluidly coupled via the primary supply line **404** to a plurality of point of use destinations (i.e., processing stations **204**). (Of course, it is contemplated that in another embodiment the blender **108** services only one point of use destination.) In one embodiment, the selectivity of which processing station to service is controlled by a flow control unit **408**. The flow control unit **408** is representative of any number of devices suitable for controlling aspects of fluid flow between the blender and downstream destinations. For example, the flow control unit **408** may include a multi-way valve for controlling the routing of the solution from the blender **108** to a downstream destination. Illustratively, the flow control unit **408** can selectively (e.g., under the control of the controller **126**) route the solution from the blender **108** to a first point of use supply line **410**, a second point of use supply line **412** or a third point of use supply line **414**, where each point of use supply line is associated with a different processing station. The flow control unit **408** may also include flow meters or flow controllers.

In one embodiment, a vessel is disposed in-line with respect to each of the point of use supply lines. For example, Figure 4 shows a first vessel **416** fluidly coupled to the first point of use supply line **410**, between the flow control unit **408** and the first processing station $\mathbf{204}_1$. Similarly, a second vessel **418** is fluidly coupled to the second point of use supply line **412**, between the flow control unit **408** and the second processing station $\mathbf{204}_2$. The vessels are suitably sized to provide a sufficient volume for supplying the respective processing stations during a time when the blender **108** is servicing a different processing station (or when the blender **108** is otherwise unavailable, such as for maintenance). In a particular embodiment, the vessels have a capacity of 6 to 10 liters, or specific volumes required for given processing requirements. The fluids levels of each vessel may be determined by the provision of respective level sensors **421**, **423** (e.g., high and low sensors). In one embodiment, the vessels **416**, 418 are pressure vessels and, accordingly, each include a respective inlet **420**, **422** for receiving a pressurizing gas. In one embodiment, the contents of the vessels **416**, **418** are monitored for concentration. Accordingly, the vessels **416**, **418** shown in Figure 4 include active concentration monitoring systems **424**, **426**. These and other aspects of the system **400** will be described in more detail below with respect to Figures 5-6.

In operation, the vessels **416**, **418** dispense their contents by manipulating respective flow control devices **428**, **430**. The flow control devices **428**, **430** may be, for example, pneumatic valves under the control of the controller **126**. The solution dispensed by the vessels **416**, **418** is then flowed to the respective processing station **204** via the respective input lines **206**. Further, the vaporized fluid from the vaporizer **110** may be flowed to one or more processing station **204**. For example, in the present illustration, vaporized fluid is input to the second processing station $\mathbf{204_2}$.

Each of the individual input lines **206** may have one or more fluid management devices $\mathbf{432_{1\text{-}3}}$ (for convenience, each set of input lines is shown having only one associated fluid management device). The fluid management devices **432** may include, for example, filters, flow controllers, flow meters, valves, etc. In a particular embodiment, one or more of the flow management devices **432** include heaters for heating the fluids being flowed through the respective lines.

Removal of fluids from the respective processing chambers is then performed by operation of the output flow control subsystem **116**. As shown in Figure 4, each of the respective plurality of output lines **210** of the output flow control subsystem **116** includes its own associated one or more flow management devices $\mathbf{434_{1\text{-}3}}$ (for convenience, each set of output lines is shown having only one associated fluid management device). The fluid management devices **434** may include, for example, filters, flow controllers, flow meters, valves, etc. In one embodiment, the fluid management devices may include active pressure control units. For example, a pressure control unit may be made up of a pressure transducer coupled to a flow controller. Such active pressure control units may operate to effect a desired process control with respect to wafers and the respective processing stations, such as by controlling the interface of fluid and a wafer surface. For example, it may be necessary to control the pressure in the output lines relative to the pressure and the processing stations to ensure a desired fluid/wafer interface.

In one embodiment, fluids removed by the output flow control subsystem **116** are flowed into one or more vacuum tanks of the vacuum tanks subsystem **118**. Accordingly, by way of illustration, the system **400** includes two vacuum tanks. A first tank **436** is coupled to the output lines $\mathbf{210_1}$ of the second processing chamber $\mathbf{204_2}$. A second tank **438** is coupled to the output lines $\mathbf{210_3}$ of the third processing chamber $\mathbf{204_3}$. In one embodiment, a separate tank may be provided for each different chemistry input to the respective processing stations. Such an arrangement may facilitate reuse of the fluids (reclamation will be described in more detail below) or disposal of the fluids.

The fluid levels in each of the tanks **436**, **438** may be monitored by one or more level sensors **437**, **439** (e.g., high and low level sensors). In one embodiment, the tanks **436**, **438** are selectively pressurized by the input of a pressurizing gas **440**, **442** and may also be vented to depressurize the tanks. Further, each tank **436**, **438** is coupled to the vacuum pump subsystem **120** by a respective vacuum line **444**, **446**. In this way, vapors can be removed from the respective tanks and processed at the vacuum pump subsystem **120**, as will be described in more detail below. In general, the contents of the tanks may either be sent to drain or be reclaimed and returned to the blender for reuse. Accordingly, the second tank **438** is shown emptying to a drain line **452**. In contrast, the first tank **436** is shown coupled to a reclamation line **448**. The reclamation line **448** is fluidly coupled to the blender **108**. In this way, fluids may be returned to the blender **108** from the processing station(s) and reused. The reclamation of fluids will be described in more detail below with respect to Figure 8.

In one embodiment, fluid delivery in the system **400** is facilitated by establishing a pressure gradient. For example, with respect to the system **400** shown in Figure 4, a decreasing pressure gradient may be established beginning with the blender **108** and ending with the processing stations **204**. In one embodiment, the blender **108** and vaporizer **110** are operated at a pressure of about 2 atmospheres, the input flow control subsystem **112** is operated at about 1 atmosphere and the processing stations **204** are operated at about 400 Torr.

Establishing such a pressure gradient motivates fluid flow from the blender **108** to the processing stations **204**.

During operation, the vessels **416**, **418** will become depleted and must be periodically refilled. According to embodiment, the management (e.g., filling, dispensation, repair and/or maintenance) of the individual vessels occurs asynchronously. That is, while a given vessel is being serviced (e.g., filled), the other vessels may continue to dispense solution. A filling cycle for a given vessel may be initiated in response to a signal from a low fluid level sensor (one or the sensors **420**, **423**). For example, assume that the sensor **421** of the first vessel **416** indicates a low fluid level to the controller **126**. In response, the controller **126** causes the first vessel **416** to depressurize (e.g. by opening a vent) and causes the flow control unit **408** to place the first vessel **416** in fluid communication with the blender **108**, while isolating the blender from the other vessels. The controller **126** then signals the blender **108** to mix and dispense the appropriate solution to the first vessel **416**. Once the first vessel **416** is sufficiently filled (e.g., as indicated by a high-level fluid sensor), the controller **126** signals the blender **108** to stop dispensing solution and causes the flow control unit **408** to isolate the blender **108** from the first vessel **416**. Further, the first vessel **416** may then be pressurized by injecting a pressurizing gas into the gas inlet **420**. The first vessel **416** is now ready to begin dispensation of solution to the first processing station. During this filling cycle, each of the other vessels may continue to dispense solution to their respective processing stations.

In one embodiment, it is contemplated that servicing the respective vessels is based on a prioritization algorithm implemented by the comptroller **126**. For example, the prioritization algorithm may be based on volume usage. That is, the vessel dispensing the highest volume (e.g., in a given period of time) is given highest priority, while the vessel dispensing the lowest volume is given lowest priority. In this way, the prioritization of the vessels can be ranked from highest volume dispensed to lowest volume dispensed.

BLENDERS

In various embodiments, the present invention provides a point-of-use process control blender system which includes at least one blender to receive and blend at least two chemical compounds together for delivery to one or more vessels or tanks including chemical baths that facilitate processing (e.g., cleaning) of semiconductor wafers or other components. The chemical solution is maintained at a selected volume and temperature within the tank or tanks, and the blender can be configured to continuously deliver chemical solution to one or more tanks or, alternatively, deliver chemical solution to the one or more tanks only as necessary (as mentioned above and described further below), so as to maintain concentrations of compounds within the tank(s) within desirable ranges.

The tank can be part of a process tool, such that the blender provides chemical solution directly to a process tool that includes a selected volume of a chemical bath. The process tool can be any conventional or other suitable tool that processes a semiconductor wafer or other component (e.g., via an etching process, a cleaning process, etc.), such as the tool **312** described above with respect to Figure 3. Alternatively, the blender can provide chemical solution to one or more holding or storage tanks, where the storage tank or tanks then provide the chemical solution to one or more process tools.

In one embodiment, a point-of-use process control blender system is provided that is configured to increase the flow rate of chemical solution to one or more tanks when the concentration of one or more compounds within the solution falls outside of a selected target range, so as to rapidly displace undesirable chemical solution(s) from the tank(s) while supplying fresh chemical solution to the tank(s) at the desired compound concentrations.

Referring now to Figure 5, a blender system **500** including the blender **108** is shown, according to one embodiment of the invention. The blender **108** is shown coupled to a tank **502**, and in combination with monitoring and recirculation capabilities, according to one embodiment. In one embodiment, the tank **502** is the pressure vessel **416** or **418** shown in Figure 4. Alternatively, the tank **502** is a cleaning tank (e.g., in one of the cleaning modules **308**, **310** of the processing

system **400**) in which semiconductor wafers or other components are immersed and cleaned.

An inlet of cleaning tank **502** is connected with the blender **108** via a flow line **512**. The flow line **512** may correspond to one of the point of use lines **410**, **412**, **414** shown in Figure 4, according to one embodiment. In the illustrative embodiment, the cleaning solution formed in the blender unit **108** and provided to cleaning tank **502** is an SC-1 cleaning solution, with ammonium hydroxide (NH_4OH) being provided to the blender unit via a supply line **506**, hydrogen peroxide (H_2O_2) being provided to the blender unit via a supply line **508**, and de-ionized water (DIW) being provided to the blender unit via a supply line **510**. However, it is noted that the blender system **500** can be configured to provide a mixture of any selected number (i.e., two or more) of chemical compounds at selected concentrations to any type of tool, where the mixtures can include chemical compounds such as hydrofluoric acid (HF), ammonium fluoride (NH_4F), hydrochloric acid (HCl), sulfuric acid (H_2SO_4), acetic acid (CH_3OOH), ammonium hydroxide (NH_4OH), potassium hydroxide (KOH), ethylene diamine (EDA), hydrogen peroxide (H_2O_2), and nitric acid (HNO_3). For example, the blender **108** may be configured to dispense solutions of dilute HF, SC-1, and/or SC-2. In a particular embodiment, it may be desirable to input hot diluted HF. Accordingly, the blender **108** may be configured with an input for hot DIW. In a particular embodiment, the hot DIW may be maintained from about 25° C to about 70° C.

In addition, any suitable surfactants and/or other chemical additives (e.g., ammonium peroxysulfate or APS) can be combined with the cleaning solutions to enhance the cleaning effect for a particular application. A flow line **514** is optionally connected with flow line **512** between the blender unit **108** and the inlet to tank **502** to facilitate the addition of such additives to the cleaning solution for use in the cleaning bath.

Tank **502** is suitably dimensioned and configured to retain a selected volume of cleaning solution within the tank (e.g., a sufficient volume to form the cleaning bath for cleaning operations). As noted above, the cleaning solution can be continuously provided from blender unit **108** to tank **502** at one or more

selected flow rates. Alternatively, cleaning solution can be provided from the blender unit to the tank only at selected time periods (e.g., at initial filling of the tank, and when one or more components in the cleaning solution within the tank falls outside of a selected or target concentration range). Tank **502** is further configured with an overflow section and outlet that permits cleaning solution to exit the tank via overflow line **516** while maintaining the selected cleaning solution volume within the tank as cleaning solution is continuously fed and/or recirculated to the tank in the manner described below.

The tank is also provided with a drain outlet connected with a drain line **518**, where the drain line **518** includes a valve **520** that is selectively controlled to facilitate draining and removal of cleaning solution at a faster rate from the tank during selected periods as described below. Drain valve **520** is preferably an electronic valve that is automatically controlled by a controller **126** (previously described above with respect to Figures 1-4). The overflow and drain lines **516** and **518** are connected to a flow line **522** including a pump **524** disposed therein to facilitate delivery of the cleaning solution removed from tank **502** to a recirculation line **526** and/or a collection site or further processing site as described below.

A concentration monitor unit **528** is disposed in flow line **522** at a location downstream from pump **524**. The concentration monitor unit **528** includes at least one sensor configured to measure the concentration of one or more chemical compounds in the cleaning solution (e.g., H_2O_2 and/or NH_4OH) as the cleaning solution flows through line **522**. The sensor or sensors of concentration monitor unit **528** can be of any suitable types to facilitate accurate concentration measurements of one or more chemical compounds of interest in the cleaning solution. In some embodiments, the concentration sensors used in the system are electrode-less conductivity probes and/or Refraction Index (RI) detectors including, without limitation, AC toroidal coil sensors such as the types commercially available under the model 3700 series from GLI International, Inc. (Colorado), RI detectors such as the types commercially available under the model CR-288 from Swagelok Company (Ohio), and acoustic signature sensors such as the types commercially available from Mesa Laboratories, Inc. (Colorado).

A flow line **530** connects an outlet of concentration monitor unit **528** with an inlet of a three-way valve **532**. The three-way valve may be an electronic valve that is automatically controlled by controller **126** in the manner described below based upon concentration measurements provided by unit **528**. A recirculation line **526** connects with an outlet of valve **532** and extends to an inlet of tank **502** to facilitate recirculation of solution from the overflow line 516 back to the tank during normal system operation (as described below). A drain line **534** extends from another outlet of valve **532** to facilitate removal of solution from tank **502** (via line **516** and/or line **522**) when one or more component concentrations within the solution are outside of the target ranges.

Recirculation flow line **526** can include any suitable number and types of temperature, pressure and/or flow rate sensors and also one or more suitable heat exchangers to facilitate heating, temperature and flow rate control of the solution as it recirculates back to the tank **502**. The recirculation line is useful for controlling the solution bath temperature within the tank during system operation. In addition, any suitable number of filters and/or pumps (e.g., in addition to pump **524**) can be provided along flow line **526** to facilitate filtering and flow rate control of the solution being recirculated back to tank **502**. In one embodiment, the recirculation loop defined by the drain line **518**, the valve **520**, the pump **524**, the line **522**, the concentration monitor unit **528**, the 3-way valve **532** and the recirculation line **526** defines the one of the concentration monitoring systems **424**, **426** described above with reference to Figure 4.

The blender system **500** includes a controller **126** that automatically controls components of the blender unit **108** as well as drain valve **520** based upon concentration measurements obtained by concentration monitor unit **528**. As described below, the controller controls the flow rate of cleaning solution from blender unit **108** and draining or withdrawal of cleaning solution from tank **502** depending upon the concentration of one or more compounds in the cleaning solution exiting tank **502** as measured by concentration monitor unit **528**.

Controller **126** is disposed in communication (as indicated by dashed lines **536** in Figure 5) with drain valve **520**, concentration monitor unit **528**, and valve **532**, as well as certain components of blender unit **108** via any suitable electrical wiring or wireless communication link to facilitate control of the blender unit and drain valve based upon measured data received from the concentration monitor unit. The controller can include a processor that is programmable to implement any one or more suitable types of process control, such as proportional-integral-derivative (PID) feedback control. An exemplary controller that is suitable for use in the process control blender system is a PLC Simatic S7-300 system commercially available from Siemens Corporation (Georgia).

As noted above, the blender unit 108 receives independently fed streams of ammonium hydroxide, hydrogen peroxide and de-ionized water (DIW), which are mixed with each other at suitable concentrations and flow rates so as to obtain an SC-1 cleaning solution having a desired concentration of these compounds. The controller **126** controls the flow of each of these compounds within blender unit **108** to achieve the desired final concentration and further controls the flow rate of SC-1 cleaning solution to form the cleaning bath in tank **502**.

An exemplary embodiment of the blender unit is depicted in Figure 6. In particular, each of the supply lines **506**, **508** and **510** for supplying NH_4OH, H_2O_2 and DIW to blender unit **108** includes a check valve **602**, **604**, **606** and an electronic valve **608**, **610**, **612** disposed downstream from the check valve. The electronic valve for each supply line is in communication with controller **126** (e.g., via electronic wiring or wireless link) to facilitate automatic control of the electronic valves by the controller during system operation. Each of the NH_4OH and H_2O_2 supply lines **506** and **508** respectively connects with an electronic three-way valve **614**, **616** that is in communication with controller **126** (via electronic wiring or a wireless link) and is disposed downstream from the first electronic valve **608**, **610**.

The DIW supply line **510** includes a pressure regulator **618** disposed downstream from electronic valve **612** to control the pressure and flow of DIW into system **108**, and line **510** further branches into three flow lines downstream from regulator **618**. A first branched line **620** extending from main line **510** includes a

flow control valve **621** disposed along the branched line and which is optionally controlled by controller **126**, and line **620** further connects with a first static mixer **630**. A second branched line **622** extends from main line **510** to an inlet of the three-way valve **614** that is also connected with NH_4OH flow line **506**. In addition, a third branched line **624** extends from main line **510** to an inlet of the three-way valve **616** which is also connected with H_2O_2 flow line **508**. Thus, the three-way valves for each of the NH_4OH and H_2O_2 flow lines facilitate the addition of DIW to each of these flows to selectively adjust the concentration of ammonium hydroxide and hydrogen peroxide in distilled water during system operation and prior to mixing with each other in the static mixers of the blender unit.

An NH_4OH flow line **626** is connected between an outlet of the three-way valve **614** for the ammonium hydroxide supply line and the first branch line **620** of the de-ionized water supply line at a location between valve **621** and static mixer **630**. Optionally, flow line **626** can include a flow control valve **628** that can be automatically controlled by controller **126** to enhance flow control of ammonium hydroxide fed to the first static mixer. The ammonium hydroxide and de-ionized water fed to the first static mixer **630** are combined in the mixer to obtain a mixed and generally uniform solution. A flow line **634** connects with an outlet of the first static mixture and extends to and connects with a second static mixer **640**. Disposed along flow line **634** is any one or more suitable concentration sensors **632** (e.g., one or more electrode-less sensors or RI detectors of any of the types described above) that determines the concentration of ammonium hydroxide in the solution. Concentration sensor **632** is in communication with controller **126** so as to provide the measured concentration of ammonium hydroxide in the solution emerging from the first static mixer. This in turn facilitates control of the concentration of ammonium hydroxide in this solution prior to delivery to the second static mixer **640** by selective and automatic manipulation of any of the valves in one or both of the NH_4OH and DIW supply lines by the controller.

A H_2O_2 flow line **636** connects with an outlet of the three-way valve **616** that is connected with the H_2O_2 supply line. Flow line **636** extends from three-way valve **616** to connect with flow line **634** at a location that is between concentration sensor(s) **632** and second static mixer **640**. Optionally, flow line **636** can include a

flow control valve **638** that can be automatically controlled by controller **126** to enhance flow control of hydrogen peroxide fed to the second static mixer. The second static mixer **640** mixes the DIW diluted NH_4OH solution received from the first static mixer **630** with the H_2O_2 solution flowing from the H_2O_2 feed line to form a mixed and generally uniform SC-1 cleaning solution of ammonium hydroxide, hydrogen peroxide and de-ionized water. A flow line **642** receives the mixed cleaning solution from the second static mixture and connects with an inlet of an electronic three-way valve **648**.

Disposed along flow line **642**, at a location upstream from valve **648**, is at least one suitable concentration sensor **644** (e.g., one or more electrode-less sensors or RI detectors of any of the types described above) that determines the concentration at least one of hydrogen peroxide and ammonium hydroxide in the cleaning solution. Concentration sensor(s) **644** is also in communication with controller **126** to provide measured concentration information to the controller, which in turn facilitates control of the concentration of ammonium hydroxide and/or hydrogen peroxide in the cleaning solution by selective and automatic manipulation of any of the valves in one or more of the NH_4OH, H_2O_2 and DIW feed lines by the controller. Optionally, a pressure regulator **646** can be disposed along flow line **642** between sensor **644** and valve **648** so as to control the pressure and flow of cleaning solution.

A drain line **650** connects with an outlet of three-way valve **648**, while flow line **652** extends from another outlet port of three-way valve **648**. The three-way valve is selectively and automatically manipulated by controller **126** to facilitate control of the amount of cleaning solution that emerges from the blender unit for delivery to tank **502** and the amount that is diverted to drain line **650**. In addition, an electronic valve **654** is disposed along flow line **652** and is automatically controlled by controller **126** to further control flow of cleaning solution from the blender unit to tank **502**. Flow line **652** becomes flow line **512** as shown in Figure 5 for delivery of SC-1 cleaning solution to tank **502**.

The series of electronic valves and concentration sensors disposed within blender unit **108** in combination with controller **126** facilitate precise control of the

flow rate of cleaning solution to the tank and also the concentrations of hydrogen peroxide and ammonium peroxide in the cleaning solution at varying flow rates of the cleaning solution during system operation. Further, the concentration monitor unit **528** disposed along the drain line **522** for tank **502** provides an indication to the controller when the concentration of one or both the hydrogen peroxide and ammonium peroxide falls outside of an acceptable range for the cleaning solution.

Based upon concentration measurements provided by concentration monitor unit **528** to controller **126**, the controller may be programmed to implement a change in flow rate of cleaning solution to the tank and to open drain valve **520** so as to facilitate a rapid displacement of SC-1 cleaning solution in the bath while supplying fresh SC-1 cleaning solution to the tank, thus bringing the cleaning solution bath within compliant or target concentration ranges as quickly as possible. Once cleaning solution has been sufficiently displaced from the tank such that the hydrogen peroxide and/or ammonium hydroxide concentrations fall within acceptable ranges (as measured by concentration monitor unit **528**), the controller is programmed to close drain valve **520** and to control the blender unit so as to reduce (or cease) the flow rate while maintaining the desired compound concentrations within the cleaning solution being delivered to the tank **502**.

An exemplary embodiment of a method of operating the system described above and depicted in Figures 5 and 6 is described below. In this exemplary embodiment, cleaning solution can be continuously provided to the tank or, alternatively, provided only at selected intervals to the tank (e.g., when cleaning solution is to be displaced from the tank). An SC-1 cleaning solution is prepared in blender unit 108 and provided to tank **502** with a concentration of ammonium hydroxide in a range from about 0.01-29% by weight, preferably about 1.0% by weight, and a concentration of hydrogen peroxide in a range from about 0.01-31% by weight, preferably about 5.5% by weight. The cleaning tank **502** is configured to maintain about 30 liters of cleaning solution bath within the tank at a temperature in the range from about 25 °C to about 125 °C.

In operation, upon filling the tank **502** with cleaning solution to capacity, the controller **126** controls blender unit **108** to provide cleaning solution to tank **502**

via flow line **512** at a first flow rate from about 0 – 10 liters per minute (LPM), where the blender can provide solution continuously or, alternatively, at selected times during system operation. When the solution is provided continuously, an exemplary first flow rate is about 0.001 LPM to about 0.25 LPM, preferably about 0.2 LPM. Ammonium hydroxide supply line 506 provides a feed supply of about 29-30% by volume NH_4OH to the blender unit, while hydrogen peroxide supply line **508** provides a feed supply of about 30% by volume H_2O_2 to the blender unit. At a flow rate of about 0.2 LPM, the flow rates of the supply lines of the blender unit can be set as follows to ensure a cleaning solution is provided having the desired concentrations of ammonium hydroxide and hydrogen peroxide: about 0.163 LPM of DIW, about 0.006 LPM of NH_4OH, and about 0.031 LPM of H_2O_2.

Additives (e.g., APS) can optionally be added to the cleaning solution via supply line **514**. In this stage of operation, a continuous flow of fresh SC-1 cleaning solution can be provided from the blender unit **108** to tank **502** at the first flow rate, while cleaning solution from the cleaning bath is also exiting tank **502** via overflow line **516** at generally the same flow rate (i.e., about 0.2 LPM). Thus, the volume of the cleaning solution bath is maintained relatively constant due to the same or generally similar flow rates of cleaning solution to and from the tank. The overflow cleaning solution flows into drain line **522** and through concentration monitor unit **528**, where concentration measurements of one or more compounds (e.g., H_2O_2 and/or NH_4OH) within the cleaning solution are determined continuously or at selected time intervals, and such concentration measurements are provided to controller **126**.

Cleaning solution can optionally be circulated by adjusting valve **532** such that cleaning solution flowing from tank **502** flows through recirculation line **526** and back into the tank at a selected flow rate (e.g., about 20 LPM). In such operations, blender unit **108** can be controlled such that no cleaning solution is delivered from the blender unit to the tank unless the concentrations of one or more compounds in the cleaning solution are outside of selected target ranges. Alternatively, cleaning solution can be provided by the blender unit at a selected flow rate (e.g., about 0.20 LPM) in combination with the recirculation of cleaning solution through line **526**. In this alternative operating embodiment, three-way

valve **532** can be adjusted (e.g., automatically by controller **126**) to facilitate removal of cleaning solution into line **534** at about the same rate as cleaning solution being provided to the tank by the blender unit, while cleaning solution still flows through recirculation line **526**. In a further alternative, valve **532** can be closed to prevent any recirculation of fluid through line **526** while cleaning solution is continuously provided to tank **502** by blender unit **108** (e.g., at about 0.20 LPM). In this application, solution exits the tank via line **516** at about the same or similar flow rate as the flow rate of fluid into the tank from the blender unit.

For applications in which cleaning solution is continuously provided to the tank, controller **126** maintains the flow rate of cleaning solution from blender unit **108** to tank **502** at the first flow rate, and the concentrations of hydrogen peroxide and ammonium hydroxide within the selected concentration ranges, so long as the measured concentrations provided by the concentration monitor unit **528** are within acceptable ranges. For applications in which cleaning solution is not continuously provided from the blender unit to the tank, controller **126** maintains this state of operation (i.e., no cleaning solution from blender unit to tank) until a concentration of hydrogen peroxide and/or ammonium hydroxide are outside of the selected concentration ranges.

When the concentration of at least one of hydrogen peroxide and ammonium hydroxide, as measured by concentration monitor unit **528**, deviates outside of the acceptable range (e.g., the measured concentration of NH_4OH deviates from the range of about 1% relative to a target concentration, and/or the measured concentration of H_2O_2 deviates from the range of about 1% relative to a target concentration), the controller manipulates and controls any one or more of the valves in blender unit 108 as described above to initiate or increase the flow rate of cleaning solution from the blender unit to tank **502** (while maintaining the concentrations of NH_4OH and H_2O_2 in the cleaning solution within the selected ranges) to a second flow rate.

The second flow rate can be in a range from about 0.001 LPM to about 20 LPM. For continuous cleaning solution operations, an exemplary second flow rate is about 2.5 LPM. The controller further opens drain valve **520** in tank **502** to

facilitate a flow of cleaning solution from the tank at about the same flow rate. At the flow rate of about 2.5 LPM, the flow rates of the supply lines of the blender unit can be set as follows to ensure a cleaning solution is provided having the desired concentrations of ammonium hydroxide and hydrogen peroxide: about 2.04 LPM of DIW, about 0.070 LPM of NH_4OH, and about 0.387 LPM of H_2O_2.

Alternatively, cleaning solution that is being recirculated to the tank at a selected flow rate (e.g., about 20 LPM) is removed from the system by adjusting three-way valve **532** so that cleaning fluid is diverted into line **534** and no longer flows into line **526**, and the blender unit adjusts the second flow rate to a selected level (e.g., 20 LPM) so as to compensate for the removal of fluid at the same or similar flow rate. Thus, the volume of cleaning solution bath within tank **502** can be maintained relatively constant during the increase in flow rate of cleaning solution to and from the tank. In addition, the process temperature and circulation flow parameters within the tank can be maintained during the process of replacing a selected volume of the solution within the tank.

The controller maintains delivery of the cleaning solution to tank **502** at the second flow rate until concentration monitor unit **528** provides concentration measurements to the controller that are within the acceptable ranges. When the concentration measurements by concentration monitor unit **528** are within the acceptable ranges, the cleaning solution bath is again compliant with the desired cleaning compound concentrations. The controller then controls blender unit **108** to provide the cleaning solution to tank **502** at the first flow rate (or with no cleaning solution being provided to the tank from the blender unit), and the controller further manipulates drain valve **520** to a closed position so as to facilitate flow of cleaning solution from the tank only via overflow line 516. In applications in which the recirculating line is used, the controller manipulates three-way valve **532** such that cleaning solution flows from line **522** into line **526** and back into tank **502**.

Thus, the point-of-use process control blender system described above is capable of effectively and precisely controlling the concentration of at least two compounds in a cleaning solution delivered to a chemical solution tank (e.g., a

tool or a solution tank) during an application or process despite potential decomposition and/or other reactions that may modify the chemical solution concentration in the tank. The system is capable of continuously providing fresh chemical solution to the tank at a first flow rate, and rapidly displacing chemical solution from the tank with fresh chemical solution at a second flow rate that is faster than the first flow rate when the chemical solution within the tank is determined to have undesirable or unacceptable concentrations of one or more compounds.

The point-of-use process control blender systems are not limited to the exemplary embodiments described above and depicted in Figures 5 and 6. Rather, such systems can be used to provide chemical solutions with mixtures of any two or more compounds such as the types described above to any semiconductor processing tank or other selected tool, while maintaining the concentrations of compounds within the chemical solutions within acceptable ranges during cleaning applications.

In addition, the process control blender system can be implemented for use with any selected number of solution tanks or tanks and/or semiconductor process tools. For example, a controller and blender unit as described above can be implemented to supply chemical solution mixtures with precise concentrations of two or more compounds directly to two or more process tools. Alternatively, the controller and blender unit can be implemented to supply such chemical solutions to one or more holding or storage tanks, where such storage tanks supply chemical solutions to one or more process tools (such as in the system **400** shown in Figure 4). The process control blender system provides precise control of the concentrations of compounds in the chemical solutions by monitoring the concentration of solution(s) within the tank or tanks, and replacing or replenishing solutions to such tanks when the solution concentrations fall outside of target ranges.

The design and configuration of the process control blender system facilitates placement of the system in substantially close proximity to the one or more chemical solution tanks and/or process tools which are to be provided with

chemical solution from the system. In particular, the process control blender system can be situated in or near the fabrication (fab) or clean room or, alternatively, in the sub-fab room but proximate where the solution tank and/or tool is located in the clean room. For example, the process control blender system, including the blender unit and controller, can be situated within about 30 meters, preferably within about 15 meters, and more preferably within about 3 meters or less, of the solution tank or process tool. Further, the process control blender system can be integrated with one or more tools so as to form a single unit including the process blender system and tool(s).

OFF-BOARD BLENDERS

As mentioned above, the blender **108** may be located off-board, according to one embodiment. That is, the blender **108** may be decoupled from the processing station(s) being serviced by the blender **108**, in which case the blender **108** may then be remotely located, e.g., in a sub-fab.

In a particular embodiment of an off-board blender, a centralized blender is configured for servicing a plurality of tools. One such centralized blender system **700** is shown in Figure 7. In general, the blender system **700** includes a blender **108** and one or more filling stations $\mathbf{702}_{1\text{-}2}$. In the illustrative embodiment two filling stations $\mathbf{702}_{1\text{-}2}$ (collectively filling stations **702**) are shown. The blender **108** may be configured as in any of the embodiments previously described (e.g., as described above with respect to Figure 6). The blender **108** is fluidly coupled to the filling stations **702** by a primary supply line **404** and a pair of flow lines $\mathbf{704}_{1\text{-}2}$ coupled at their respective ends to one of the filling stations $\mathbf{702}_{1\text{-}2}$. A flow control unit **706** is disposed at the junction of the primary supply line and the flow lines $\mathbf{704}_{1\text{-}2}$. The flow control unit **706** is representative of any number of devices suitable for controlling aspects of fluid flow between the blender **108** and the filling stations **702**. For example, the flow control unit **706** may include a multi-way valve for controlling the routing of the solution from the blender **108** to a downstream destination. Accordingly, the flow control unit **408** can selectively (e.g., under the control of the controller **126**) route the solution from the blender **108** to the first filling station $\mathbf{702}_1$ via the first flow line $\mathbf{704}_1$ and to the second

filling station **702_2** via the second flow line **704_2**. The flow control unit **706** may also include flow meters or flow controllers.

Each of the filling stations **702** is coupled to one or more processing tools **708**. In the illustrative embodiment, the filling stations are each coupled to four tools (Tools 1-4), although more generally the filling stations may be coupled to any number of points of use. Routing (and/or metering, flow rate, etc.) of the solutions from the filling stations **702** may be controlled by flow control units **710_{1-2}** disposed between the respective filling stations and the plurality of tools **708**. In one embodiment, filters **712_{1-2}** are disposed between the respective filling stations and the plurality of tools **708**. The filters **712_{1-2}** are selected to remove debris from the solution prior to being delivered to the respective tools.

In one embodiment, each filling station **702** supplies a different chemistry to the respective tools **708**. For example, in one embodiment the first filling station **702_1** supplies diluted hydrofluoric acid, while the second filling station **702_2** supplies a SC-1 type solution. Flow control devices at the respective tools may be operated to route the incoming solutions to appropriate processing stations/chambers of the tools.

In one embodiment, each of the filling stations may be operated asynchronously with respect to the blender **108**. That is, each filling station **702_{1-2}** may be filled while simultaneously dispensing a solution to one or more of the tools **708**. To this end, each filling station is configured with a filling loop having at least two vessels disposed therein. In the illustrative embodiment, the first filling station has a first filling loop **714_{A-D}** with two vessels **716_{1-2}**. The filling loop is defined by a plurality of flow line segments. A first flow line segment **714_A** fluidly couples the flow line **704** with the first vessel **716_1**. A second flow line segment **714_B** fluidly couples the first vessel **716_1** to the processing tools **708**. A third flow line segment **714_C** fluidly couples the flow line **704** with the second vessel **716_2**. A fourth flow line segment **714_D** fluidly couples the second vessel **716_2** to the processing tools **708**. A plurality of valves **720_{1-4}** are disposed in the filling loop to control fluid communication between the blender **108** and the vessels **716**, and between the vessels **716** and the plurality of tools **708**.

Each of the vessels **716** have an appropriate number of level sensors **717_{1-2}** (e.g., a high level sensor and a low level sensor) in order to sense a fluid level within the respective vessel. Each of the vessels also has a pressurizing gas input 719_{1-2}, whereby the respective vessel may be pressurized, and a vent **721_{1-2}**, whereby the respective vessel may be depressurized. Although not shown, the filling loop **714_{A-D}** of the first processing station **702_1** may be equipped with any number of flow management devices, such as pressure regulators, flow controllers, flow meters, etc.

The second filling station **702** is likewise configured. Accordingly, the second filling station **702** of Figure 7 is shown having two vessels **722_{1-2}** disposed in a filling loop **724_{A-D}** having a plurality of valves **726_{1-4}** for controlling fluid communication.

In operation, the controller **126** may operate the flow control unit **706** to establish communication between the blender **108** and the first filling station **702_1**. The controller **126** may also operate the first filling loop valve **720_1** to establish fluid communication between the first flow line **704_1** and the first flow line segment **714_A** of the filling loop **714_{A-D}**, thereby establishing fluid communication between the blender **108** and the first vessel **716_1**. In this configuration, the blender **108** may flow a solution to the first vessel **716_1** until an appropriate one of the sensors **717_1** (i.e., a high level sensor) indicates that the vessel is full, at which point the first filling loop valve is closed **720_1** and the vessel **716_1** may be pressurized by application of a gas to the pressurizing gas input **719_1**. Prior to and during filling the first vessel, the respective vent **721_1** may be open to allow the vessel to depressurize.

While the first vessel **716_1** is being filled, the filling station **702_1** may be configured such that the second vessel **716_2** is dispensing solution to one or more of the tools **708**. Accordingly, the second valve **720_2** is closed, the third valve **720_3** is open, and the fourth valve **720_2** is set to a position allowing fluid communication between the second vessel **716_2** and the processing tools **708** via the fourth flow line segment **714_D**. During dispensation of solution, the second

vessel may be under pressure by application of a pressurizing gas to the respective gas input **721_2**.

Upon determining that the fluid level in second vessel **716_2** has reached a predetermined low level, as indicated by an appropriate low level sensor **717_2**, the filling station **702** may be configured to halt dispensation from the second vessel **716_2** and begin dispensation from the first vessel **716_1** by setting the valves of the first filling loop to appropriate positions. The second vessel **716_2** may then be depressurized by opening the respective vent **721_2**, after which the second vessel **716_2** may be filled by solution from the blender **108**.

The operation of the second filling station **702_2** is identical to the operation of the first filling station **702_1** and, therefore, will not be described in detail.

After filling a vessel in one of the filling stations **$702_{1\text{-}2}$**, the filling station will be capable of dispensing a solution to one or more of the tools **708** for a period of time. During this time, the flow control unit **706** may be operated to place the blender **108** in fluid communication with the other filling station. It is contemplated that the vessels of the filling stations may be sized in capacity such that, for given flow rates into and out of the filling stations, the blender **108** may refill one of the vessels of one of the filling stations before the standby vessel of the other filling station is depleted. In this way, solution dispensation from the filling stations may be maintained with no interruption, or substantially no interruption.

RECLAMATION SYSTEMS

As noted above, in one embodiment of the present invention, fluids removed from processing stations (or, more generally, points of use) are reclaimed and reused. Referring now to Figure 8A, one embodiment of a reclamation system **800A** is shown. The reclamation system **800A** includes a number of components previously described with respect to Figure 4, and those components are identified by like numbers and will not be described again in detail. Further, for clarity a number of items previously described have been removed. In general, the reclamation system **800A** includes the blender **108** and a plurality of tanks **$802_{1\text{-}N}$** (collectively tanks **802**). The tanks **802** correspond to

the tank **436** shown in Figure 4 and, therefore, each tank is fluidly coupled to a respective processing station (not shown) and may also be fluidly coupled to the vacuum pump subsystem **120** (not shown).

In one embodiment, the tanks **802** are configured to separate liquids from gases in the incoming liquid-gas streams. To this end, the tanks **802** may each include an impingement plate $\mathbf{828}_{1\text{-}N}$ at an inlet of the respective tanks. Upon encountering the impingement plate **828**, liquid is condensed out of the incoming fluid streams by operation of blunt force. The tanks **802** may also include demisters $\mathbf{830}_{1\text{-}N}$. The demisters **830** generally include an array of surfaces positioned at angles (e.g., approximately 90 degrees) relative to the fluid being flowed through the demister **830**. Impingement with the demister surfaces causes further condensation of liquid from the gas. Liquid condensed from the incoming stream is captured in a liquid storage area $\mathbf{832}_{1\text{-}N}$ at a lower portion of the tanks, while any remaining vapor is removed to the vacuum pump subsystem **120** (shown in Figure 1). In one embodiment, a degassing baffle $\mathbf{834}_{1\text{-}N}$ is positioned below the demisters, e.g., just below the impingement plates **828**. The degassing baffle extends over the liquid storage area **832** and forms an opening $\mathbf{836}_{1\text{-}N}$ at one end. In this configuration the degassing baffle allows liquid to enter the liquid storage area **832** via the opening **836**, but prevents moisture from the liquid from being reintroduced with the incoming liquid-gas stream.

Each of the tanks **802** is fluidly coupled to the blender **108** via a respective reclamation line $\mathbf{804}_{1\text{-}N}$ (collectively reclamation lines **804**). Fluid flow is motivated from the tanks through their respective reclamation lines **804** by the provision of a respective pump $\mathbf{806}_{1\text{-}N}$ (collectively pump **806**). Fluid communication between the tanks **802** and their respective pumps **806** is controlled by operation of pneumatic valves $\mathbf{808}_{1\text{-}N}$ (collectively valves **808**) disposed in the reclamation lines **804**. In one embodiment, the pumps **806** are centrifugal pumps or suitable alternatives such as air operated diaphragm or bellows pumps.

In one embodiment, filters $\mathbf{810}_{1\text{-}N}$ (collectively filters **810**) are disposed in each of the reclamation lines. The filters **810** are selected to remove debris from the reclaimed fluids prior to being introduced into the blender **108**. Although not

shown, the filters may each be coupled to a flushing system configured to flow a flushing fluid (e.g., DIW) through the filters to remove and carry away the debris caught by the filters. Fluid flow into the filters and into the blender 108 may be managed (e.g., controlled and/or monitored) by the provision of one or more flow management devices. Illustratively, flow management devices **812**$_{1\text{-}N}$, **814**$_{1\text{-}N}$ are disposed in the respective reclamation lines upstream and downstream of the filters. For example, in the illustrative embodiment, the upstream devices **812**$_{1\text{-}N}$ are pneumatic valves (collectively valves **812**) are disposed upstream of each of the filters **810**. Accordingly, the flow rates of the reclamation fluids may be controlled by operation of the pneumatic valves **812**. Further, the downstream devices **814**$_{1\text{-}N}$ include pressure regulators and flow control valves to ensure a desired pressure and flow rate of the fluids being introduced to the blender **108**. Each of the flow management devices may be under the control of the controller **126** (shown in Figure 4).

Each of the reclamation lines **804** terminate at the primary supply line **404** of the blender **108**. Accordingly, each of the fluids flowed from the respective tanks may be streamed into and mixed with the solution being flowed through the primary supply line **404**. In one embodiment, the reclamation fluids are introduced upstream from a mixing station (e.g., mixer **642** described above with respect to Figure 6) disposed in line with the primary supply line **404**. Further, one or more concentration monitors **818** may be disposed along the primary supply line **404** downstream from the mixer **642**. Although only one concentration monitor is shown for convenience, it is contemplated that a concentration monitor is provided for each different chemistry being reclaimed, in which case the reclamation streams may be introduced into the primary supply line **404** at an appropriate point upstream from a respective concentration monitor for the particular stream. In this way, the concentration of a respective chemistry may be monitored at the respective concentration monitor. If the concentration is not within a target range, the blender **108** may operate to inject calculated amounts of the appropriate chemical(s) from the various inputs **402**. The resulting solution is then mixed at the mixer **642** and again monitored for concentration at the concentration monitor **818**. This process may be continued, while diverting the solution to drain, until the

desired concentrations are achieved. The solution may then be flowed to the appropriate point of use.

In some configurations, the chemistries being used at each of the respective processing stations may always be the same. Accordingly, in one embodiment, the various reclamation lines **804** may be input to the appropriate point of use supply lines **410**, **412**, **414**, as is illustrated by the reclamation system **800B** shown in Figure 8B. Although not shown, concentration monitors may be disposed along each of the reclamation lines to monitor the respective concentrations of the reclamation streams being input to the point of use supply lines. Although not shown, mixing zones may be disposed along the point of use supply lines **410**, **412**, **414** to mix the incoming reclamation streams with the stream from the blender **108**. Also, suitable mixing of streams may be achieved by delivering the stream from the blender **108** and the respective reclamation streams at 180 degrees relative to each other. The incoming streams may be mixed at a T-junction coupling, whereby the resulting mixture is flowed toward the respective points of use at 90 degrees relative to the flow paths of the incoming streams.

Alternatively, it is contemplated to flow each of the reclamation fluids to a point upstream of the appropriate concentration monitor in the blender **108**, as is illustrated by the reclamation system **800C** shown in Figure 8C. For example, a reclaimed solution of diluted hydrofluoric acid from the first reclamation line $\mathbf{804_1}$ may be input downstream of a hydrofluoric acid input $\mathbf{402_1}$ and upstream of the first concentration monitor $\mathbf{406_1}$ configured to monitor the concentration of hydrofluoric acid. A reclaimed solution of SC-1 type chemistry from the second reclamation line $\mathbf{804_2}$ may be input downstream of the ammonium hydroxide input $\mathbf{402_2}$ and hydrogen peroxide input $\mathbf{402_3}$, and upstream of the second and third concentration monitors $\mathbf{406_2}$, $\mathbf{406_N}$ configured to monitor the concentration of SC-1 type solution constituents. And so on. In one embodiment, distinguishing between various constituents in a mixture of multiple constituents, such as ammonium hydroxide and hydrogen peroxide, is possible by deriving an equation from process modeling using metrology signals and analytical results from titrations. The incoming chemical concentration to the process must be known;

more specifically, the concentration of the fluid must be known before decompositions, escape of the NH_3 molecule, or formation of any resultant salts or by-products from the chemical processes occurring. In this way, the changing metrology can be observed and the change in components typical for that process can be predicted.

In each of the foregoing embodiments, the reclamation fluids may be filtered and monitored for appropriate concentrations. However, after some amount of time and/or some number of process cycles the reclaimed fluids will no longer be viable for their intended use. Accordingly, and the one embodiment, the solutions from the tanks **804** are only recirculated and reused for a limited time and/or a limited number of process cycles. In one embodiment, the process cycles are measured in number of wafers processed. Thus, in a particular embodiment, a solution of a given chemistry for a given process station is reclaimed and reused for N wafers, where N is some predetermined integer. After N wafers have been processed, the solution is diverged to drain.

It should be understood that the reclamation systems **800A-C** shown in Figures 8A-C are merely illustrative of one embodiment. Persons skilled in the art will recognize other embodiments within the scope of the present invention. For example, in another embodiment of the reclamation systems **800A-C**, fluids may be alternatively routed from the tanks **802** to an off-board reclamation facility located, e.g., in the sub-fab. To this end, appropriate flow control devices (e.g., pneumatic valves) may be disposed in the respective reclamation lines **804**.

VACUUM PUMP SUBSYSTEM

Referring now to Figure 9, one embodiment of the vacuum pump subsystem **120** is shown. In general, the vacuum pump subsystem **120** may operate to collect waste fluids and separate gases from fluids to facilitate waste management. Accordingly, the vacuum pump subsystem **120** is coupled to each of the vacuum tanks **436**, **438** (shown in Figure 4) and vacuum tank **802** (shown in Figure 8) by a vacuum line **902**. Thus, the vacuum line **902** may be coupled to the respective vacuum lines **444** and **446** shown in Figure 4. Although not shown in Figure 9, one or more valves may be disposed in the vacuum line **902** and/or the

respective vacuum lines (e.g., lines **444** and **446** shown in Figure 4) of the vacuum tanks, whereby a vacuum may be selectively placed on the respective tanks. Further, a vacuum gauge **904** may be disposed in the vacuum line **902** in order to measure the pressure in the vacuum line **902**.

In one embodiment, an active pressure control system **908** is disposed in the vacuum line **902**. In general, the active pressure control system **908** operates to maintain a desired pressure in the vacuum line **902**. Controlling the pressure in this way may be desirable to ensure process control over processes being performed in the respective processing stations **204** (shown in Figure 4, for example). For example, assuming a process being performed in a given processing station **204** requires that a pressure of 400 Torr be maintained in the vacuum line **902**, the active pressure control system **908** is operated under PID control (in cooperation with the controller **126**) to maintain the desired pressure.

In one embodiment, the active pressure control system **908** includes a pressure transmitter **910** and a pressure regulator **912**, which are an electrical communication with each other. The pressure transducer **910** measures the pressure in the vacuum line **902** and then issues a signal to the pressure regulator **912**, causing the pressure regulator **912** to open or close a respective variable orifice, depending on a difference between the measured pressure and the set (desired) pressure.

In one embodiment, the vacuum placed on the vacuum line **902** is generated by a pump located downstream from the active pressure control system **908**. In a particular embodiment, the pump **914** is a liquid ring pump. A liquid ring pump may be particularly desirable because of its ability to safely handle surges and steady streams of liquids, vapors and mists. While the operation of liquid ring pumps is well-known, a brief description is provided here. It is understood, however, that embodiments of the present invention are not limited to the particular operational or structural aspects of liquid ring pumps.

In general, a liquid ring pump operates to remove gases and mists by the provision of an impeller rotating freely in an eccentric casing. The vacuum

pumping action is accomplished by feeding a liquid, usually water (called sealant fluid), into the pump. In the illustrative embodiment, the sealant fluid is provided by a tank **906**, which is fluidly coupled to the pump **914** by a feed line **913**. Illustratively, a valve **958** is disposed in the feed line **913** in order to selectively isolate the tank **906** from the pump **914**. As the sealant fluid enters the pump during operation, the sealant fluid is urged against the inner surface of the pump **914** casing by the rotating impeller blades to form a liquid piston which expands in the eccentric lobe of the pump's casing, thereby creating a vacuum. When gas or vapor (from the incoming stream) enters the pump **914** at a suction port **907** of the pump **914**, to which the vacuum line **902** is coupled, the gas/vapor is trapped by the impeller blades and the liquid piston. As the impeller rotates, the liquid/gas/vapor is pushed inward by the narrowing space between the rotor and casing, thereby compressing the trapped gas/vapor. The compressed fluid is then released through a discharge port **909** as the impeller completes its rotation.

The pump **914** is connected at its discharge port **909** to a fluid flow line **915** which terminates at the tank **906**. In one embodiment, the tank **906** is configured to further separate liquids from gases in the incoming liquid-gas streams. To this end, the tank **906** may include an impingement plate **916** at an inlet of the tank **906**. Upon encountering the impingement plate **916**, liquid is condensed out of the incoming fluid streams by operation of blunt force. The tank **906** may also include a demister **920**. The demister **920** generally includes an array of surfaces positioned at angles (e.g., approximately 90 degrees) relative to the fluid being flowed through the demister **920**. Impingement with the demister surfaces causes further condensation of liquid from the gas. Liquid condensed from the incoming stream is captured in a liquid storage area **918** at a lower portion of the tank **906**, while any remaining vapor is removed through an exhaust line **924**. In one embodiment, a degassing baffle **922** is positioned below the demister, e.g., just below the impingement plate **916**. The degassing baffle **922** extends over the liquid storage area **918** and forms an opening **921** at one end. In this configuration the degassing baffle **922** allows liquid to enter the liquid storage area **918** via the opening **921**, but prevents moisture from the liquid from being reintroduced with the incoming liquid-gas stream.

In one embodiment, the sealant fluid contained in the tank **906** is heat exchanged to maintain a desired sealant fluid temperature. For example, in one embodiment it may be desirable to maintain the sealant fluid at a temperature below 10° C. To this end, the vacuum pump subsystem **120** includes a cooling loop **950**. A pump **937** (e.g., a centrifugal pump) provides the mechanical motivation to flow the fluid through the cooling loop **950**. The cooling loop **950** includes an outlet line **936** and a pair of return lines **962**, **964**. The first return line **962** fluidly couples the outlet line **936** to an inlet of a heat exchanger **954**. The second return line **964** is coupled to an outlet of the heat exchanger **954** and terminates at the tank **906**, where the cooled sealant fluid is dispensed into the liquid storage area **918** of the tank **906**. Illustratively, a valve **960** is disposed in the second return line **964**, whereby the cooling loop **950** may be isolated from the tank **906**. In this way, the temperature controlled sealant fluid causes some vapor/mist to condense out of the incoming fluid and into the liquid of the sealant pump **914**.

In one embodiment, the heat exchanger **954** is in fluid communication with an onboard cooling system **952**. In particular embodiment, the onboard cooling system **952** is a Freon-based cooling system, which flows Freon through the heat exchanger **954**. In this context, "onboard" refers to the cooling system **953** being physically integrated with the heat exchanger **954**. In another embodiment, the cooling system **953** may be an "off-board" component, such as a stand-alone chiller.

During operation, sealant fluid may be circulated from the tank **906** through the cooling loop **950** on a continual or periodic basis. As the sealant fluid is flowed through the heat exchanger **954**, the fluid is cooled and then returned to the tank **906**. The heat exchange effected by the heat exchanger **954** (i.e., the temperature to which the sealant fluid is brought) may be controlled by operating the cooling system **952**. To this end, a temperature sensor **953** may be placed in communication with the sealant fluid contained in the liquid storage area **918** of the tank **906**. Measurements made by the temperature sensor **953** may be provided to the controller **126**. The controller **126** may then issue appropriate control signals to the cooling system **952**, thereby causing the cooling system **952**

to adjust the temperature of the Freon (or other cooling fluid being used). It is also contemplated that the sealant fluid in the liquid storage area **918** may in part be cooled by thermal exchange with the ambient environment of the tank **906**. In this way, the sealant fluid may be maintained at a desired temperature.

In one embodiment, cooled sealant fluid from the cooling loop **950** may be injected into the vacuum line **902** upstream from the liquid ring pump **914**. Accordingly, the vacuum pump subsystem **120** includes a feed line **957** shown branching from the second return line **964**. A valve **956** is disposed in the feed line **957**, whereby fluid communication between the cooling loop **950** and the vacuum line **902** may be established or disconnected. While the valve **956** remains open, a portion of the cooled sealant fluid flows from the cooling loop **950** into the vacuum line **902**, via the feed line **957**. Thus, the cooled sealant fluid enters a stream of gas/liquid flowing through the vacuum line **902** towards the liquid ring pump **914**. In this way, the relatively low temperature cooled sealant fluid causes some vapor or mist to condense out of the incoming gas/liquid stream prior to entering the pump **914**. In one embodiment, for a temperature of the incoming stream (from the vacuum tanks via the vacuum line **902**) between about 80°C and about 10°C, the temperature of the cooled sealant fluid may be between about 5°C and about 10°C.

In one embodiment, the vacuum pump subsystem **120** is configured to monitor one more concentrations of constituents in the sealant fluid. Monitoring chemical concentrations may be desirable, for example, to protect any (e.g., metal) components of the liquid ring pump **914**, and/or other components of the vacuum pump subsystem **120**. To this end, the system **120** shown in Figure 9 includes an active chemical concentration control system **940** disposed in the cooling loop **950**. In the illustrative embodiment, the concentration control system **940** includes a chemical monitor **942** in electrical communication with a pneumatic valve **944**, as shown by the bidirectional communication path **945**. It should be appreciated, however, that the pneumatic valve **944** may not communicate directly with one another, but rather through the controller **126**. During operation, the chemical monitor **942** checks the concentration of one or more constituents of the sealant fluid flowing through the outlet line **936**. If a set point of the chemical

monitor **942** is exceeded, the chemical monitor **942** (or the controller **126** in response to the signal from the chemical monitor **942**) issues a signal to the pneumatic valve **944**, whereby the pneumatic valve **944** opens communication to a drain line **938** in order to allow at least a portion of the sealant fluid to drain. In the illustrative embodiment, a check valve **939** is disposed in the drain line **938** to prevent backflow of fluids. Further, a back pressure regulator **946** is disposed in the drain line **938**, or at a point upstream from the drain line. The back pressure regulator **946** ensures that a sufficient pressure is maintained in the cooling loop **950**, thereby allowing continued flow of sealant fluid through the cooling loop **950**.

In one embodiment, the tank **906** is selectively fluidly coupled to one of a plurality of different drains. A particular one of the plurality of drains is then selected on the basis of the make-up (i.e., constituents or concentrations) of the sealant fluid. For example, in the case of a sealant fluid containing a solvent the sealant fluid may be directed to a first drain, while in the case of a non-solvent the sealant fluid may be directed to a second drain. In at least one aspect, this embodiment may serve to avoid deposits being built up in a given drain line that might otherwise occur where, for example, solvents and non-solvents are disposed of through the same drain. Accordingly, it is contemplated that the sealant fluid can be monitored for independent formations of chemical solution such as HF, NH3, HCL or IPA. Each of these chemical solutions can be directed a separate drain (or, some combinations of the solutions may be directed separate drains). In one embodiment, this can be accomplished using a sound velocity sensor to measure the changing density of the solution in the tank **906**.

While the tank **906** is being drained (and, more generally, at any time during operation of the system **120**), a sufficient level of sealant fluid may be maintained in the tank **906** by provision of an active level control system **928**. In one embodiment, the active level control system **928** includes a pneumatic valve **944** disposed in an input line **926**, and a plurality of fluid level sensors $\mathbf{934}_{1\text{-}2}$. The fluid level sensors may include, for example, a high level fluid sensor $\mathbf{934}_1$ and a low level fluid sensor $\mathbf{934}_2$. The pneumatic valve **944** and the plurality of fluid level sensors $\mathbf{934}_{1\text{-}2}$ are in electrical communication with each other via the controller **126**, as indicated by the dashed communication path **932**. In operation,

the fluid level in the tank **906** may fall sufficiently to trip the low fluid level sensor **934_2**. In response, the comptroller **126** issues a control signal causing the pneumatic valve **930** to open and allow communication between a first sealant fluid source **970** (e.g., a source of deionized water (DIW)) with the tank **906** via the inlet line **926**. Once the fluid in the tank **906** is returned to a level between the high and low level sensors **934_2**, the pneumatic valve **930** is closed.

In addition to maintaining a sufficient level of sealant fluid in the tank **906** while the tank is being drained, the active level control system may also initiate a drain cycle in response to a signal from the high fluid level sensor **934_2**. In other words, should the fluid level in the tank **906** rise sufficiently high to trip the high fluid level sensor, the sensor then issues a signal to the controller **126**. In response, the controller **126** issues a signal causing the pneumatic valve **944** to open and allow sealant fluid flow to the drain line **938**.

Further, it is contemplated that the tank **906** may be coupled to any number of sealant fluids or additives. For example, in one embodiment the tank **906** is coupled to a neutralizer source **972**. The neutralizer may be selected to neutralize various constituents of the incoming steam from the vacuum tanks via the vacuum line **902**. In a particular embodiment, the neutralizer is acidic or basic, and is capable of neutralizing bases or acids, respectively. The neutralizer from the neutralizer source **972** may be selectively introduced to the tank **906** by coupling the source **972** to the inlet line **926** at a valve **974**. The valve **974** may be configured such that one or both of the sources **970**, **972** may be placed in fluid communication with the tank **906**.

Various embodiments of a chemical management system have been described herein. However, the disclosed embodiments are merely illustrative and persons skilled in the art will recognize other embodiments within the scope of the invention. For example, a number of the foregoing embodiments provide for a blender **108** which may be located onboard or off-board relative to a processing tool; however, in another embodiment, the blender **108** may be dispensed with altogether. That is, the particular solutions required for a particular process may be provided in ready to use concentrations that do not require blending. In this

case, source tanks of the particular solutions may be coupled to the input flow control subsystem **112**, shown in Figure 1 for example.

Accordingly, it is apparent that the present invention provides for numerous additional embodiments, which will be recognized by those skilled in the art, and all of which are in the scoped of the present invention.

CLAIMS:

1. A vacuum pump system, comprising:

a vacuum line fluidly coupled to at least one of a plurality of fluid outlets of a processing station;

a liquid ring pump having a suction port coupled to the vacuum line to receive an incoming multiphase stream formed from one or more fluids removed from the plurality of fluid outlets;

a tank coupled to an exhaust port of the liquid ring pump and comprising one or more devices configured for removing liquid from a multiphase stream output by the liquid ring pump through the exhaust port; and

a pressure control system disposed in the vacuum line upstream from the liquid ring pump, wherein the pressure control system is configured to maintain a target pressure in the vacuum line according to a desired pressure in the processing station.

2. The system of claim 1, wherein at least one of the one or more devices includes at least one of:

a degassing baffle; and

an impingement plate positioned at an inlet to the tank for receiving the output of the liquid ring pump.

3. The system of claim 1, wherein at least one of the one or more devices includes a demister.

4. The system of claim 1, further comprising a coolant source for injecting a cooling fluid into the incoming multi-phase stream prior to the multiphase stream being input to the liquid ring pump, the cooling fluid having a temperature sufficient to condense liquid from the multiphase stream.

5. The system of claim 1, further comprising a chemical concentration control system configured to:

monitor a concentration of a sealant fluid contained in the tank and fed to the liquid ring pump for the operation of the liquid ring pump; and

selectively adjust a concentration of the sealant fluid; and

6. The system of claim 1, further comprising a chemical concentration control system configured to:

monitor a concentration of a sealant fluid contained in the tank and fed to the liquid ring pump for the operation of the liquid ring pump; and

direct the sealant fluid to one of a plurality of drains, the drain being selected on the basis of a make-up of the sealant fluid.

7. The system of claim 1, further comprising:

a chemical blender coupled to the processing station and configured to mix a chemical solution for delivery to the processing station.

8. The system of claim 7, further comprising a concentration monitor operable to determine a concentration of at least one of a plurality of chemicals in the solution mixed by the chemical blender.

9. The system of claim 7, further comprising a concentration monitoring system configured to:

determine a concentration of at least one of a plurality of chemicals in the solution mixed by the chemical blender; and

upon determining that the at least one chemical in the solution is not at a predetermined concentration, add an amount of one or more fluids to the chemical blender until the at least one chemical is at the predetermined concentration.

10. The system of claim 9, wherein the chemical monitoring system is configured to prevent the solution being flowed to the processing station until the at least one chemical is that the predetermined concentration.

11. A vacuum pump system, comprising:

a vacuum line fluidly coupled to at least one of a plurality of fluid outlets of a processing station;

a liquid ring pump having a suction port coupled to the vacuum line to receive an incoming multiphase stream formed from one or more fluids removed from the plurality of fluid outlets;

a tank coupled to an exhaust port of the liquid ring pump and comprising one or more devices configured for removing liquid from a multiphase stream output by the liquid ring pump through the exhaust port; and

a coolant source for injecting a cooling fluid into the incoming multi-phase stream prior to the multiphase stream being input to the liquid ring pump, the cooling fluid having a temperature sufficient to condense liquid from the multiphase stream.

12. The system of claim 11, wherein the coolant source is a cooling loop configured for circulating a fluid from the tank to a heat exchanger and then back to the tank; wherein the cooling fluid is the fluid being circulated and is removed from the cooling loop at a point downstream from the heat exchanger.

13. The system of claim 12, further comprising an onboard cooling system configured to provide a coolant to the heat exchanger.

14. The system of claim 11, wherein at least one of the one or more devices includes a demister.

15. The system of claim 11, wherein at least one of the one or more devices includes at least one of:
a degassing baffle; and
an impingement plate positioned at an inlet to the tank for receiving the output of the liquid ring pump.

16. The system of claim 11, further comprising a chemical blender coupled to the processing station and configured to mix a chemical solution for delivery to the processing station.

17. The system of claim 16, further comprising a concentration monitor operable to determine a concentration of at least one of a plurality of chemicals in the solution mixed by the chemical blender.

18. The system of claim 16, wherein the chemical blender comprises a concentration monitoring system configured to:

determine a concentration of at least one of a plurality of chemicals in the solution mixed by the chemical blender; and

upon determining that the at least one chemical in the solution is not at a predetermined concentration, add an amount of one or more fluids to the chemical blender until the at least one chemical is at the predetermined concentration.

19. The system of claim 18, wherein the chemical monitoring system is configured to prevent the solution being flowed to the processing station until the at least one chemical is that the predetermined concentration.

20. A vacuum pump system, comprising:

a vacuum line fluidly coupled to at least one of a plurality of fluid outlets of a processing station;

a liquid ring pump having a suction port coupled to the vacuum line to receive an incoming multiphase stream formed from one or more fluids removed from the plurality of fluid outlets;

a tank coupled to an exhaust port of the liquid ring pump and comprising one or more devices configured for removing liquid from a multiphase stream output by the liquid ring pump through the exhaust port; and

a chemical concentration control system configured to:

monitor a concentration of a sealant fluid contained in the tank and fed to the liquid ring pump for the operation of the liquid ring pump; and

selectively adjust a concentration of the sealant fluid.

21. The system of claim 20, wherein at least one of the one or more devices includes a demister.

22. The system of claim 20, wherein at least one of the one or more devices includes at least one of:

a degassing baffle; and

an impingement plate positioned at an inlet to the tank for receiving the output of the liquid ring pump.

23. The system of claim 20, further comprising:

a chemical blender coupled to the processing station and configured to mix a chemical solution for delivery to the processing station.

24. The system of claim 23, further comprising a concentration monitor operable to determine a concentration of at least one of a plurality of chemicals in the solution mixed by the chemical blender.

25. The system of claim 23, further comprising a concentration monitoring system configured to:

determine a concentration of at least one of a plurality of chemicals in the solution mixed by the chemical blender; and

upon determining that the at least one chemical in the solution is not at a predetermined concentration, add an amount of one or more fluids to the chemical blender until the at least one chemical is at the predetermined concentration.

26. The system of claim 25, wherein the chemical monitoring system is configured to prevent the solution being flowed to the processing station until the at least one chemical is that the predetermined concentration.

27. A vacuum pump system, comprising:

a vacuum line fluidly coupled to at least one of a plurality of fluid outlets of a processing station;

a liquid ring pump having a suction port coupled to the vacuum line to receive an incoming multiphase stream formed from one or more fluids removed from the plurality of fluid outlets;

a tank coupled to an exhaust port of the liquid ring pump and comprising one or more devices configured for removing liquid from a multiphase stream output by the liquid ring pump;

a pressure control system disposed in the vacuum line upstream from the liquid ring pump, wherein the pressure control system is configured to maintain a target pressure in the vacuum line according to a desired pressure in the processing station;

a chemical concentration control system configured to:

monitor a concentration of a sealant fluid contained in the tank and fed to the liquid ring pump for the operation of the liquid ring pump; and

selectively adjust a concentration of the sealant fluid; and

a coolant source for injecting a coolant into the incoming multiphase stream prior to the multiphase stream being input to the liquid ring pump, the coolant having a temperature sufficient to condense liquid from the multiphase stream.

28. The system of claim 27, further comprising:

a chemical blender coupled to the processing station and configured to mix a chemical solution for delivery to the processing station.

29. The system of claim 28, further comprising a concentration monitor operable to determine a concentration of at least one of a plurality of chemicals in the solution mixed by the chemical blender.

30. The system of claim 28, further comprising a concentration monitoring system configured to:

determine a concentration of at least one of a plurality of chemicals in the solution mixed by the chemical blender; and

upon determining that the at least one chemical in the solution is not at a predetermined concentration, add an amount of one or more fluids to the chemical blender until the at least one chemical is at the predetermined concentration.

31. The system of claim 30, wherein the chemical monitoring system is configured to prevent the solution being flowed to the processing station until the at least one chemical is that the predetermined concentration.

32. A processing system, comprising:

a chemical blender configured to be selectively and alternately coupled to fluid inlets associated with a first and a second processing station by operation of a flow control unit, so that while the chemical blender is coupled to a first fluid inlet associated with the first processing station the chemical blender is decoupled from a second fluid inlet associated with the second processing station, and vice versa;

a plurality of fluid outlets from the processing stations; and

a vacuum pump system fluidly coupled to at least one of the plurality of fluid outlets via at least a vacuum line; the vacuum pump system, comprising:

a liquid ring pump having a suction port coupled to the vacuum line to receive an incoming multiphase stream formed from one or more fluids removed from the plurality of fluid outlets; and

a tank coupled to an exhaust port of the liquid ring pump and comprising one or more devices configured for removing liquid from a multiphase stream output by the liquid ring pump through the exhaust port.

33. The system of claim 32, wherein the vacuum pump system further comprises:

a pressure control system disposed in the vacuum line upstream from the liquid ring pump, wherein the pressure control system is configured to maintain a target pressure in the vacuum line according to a desired pressure in the processing stations.

34. The system of claim 32, wherein the vacuum pump system further comprises a chemical concentration control system configured to:

monitor a concentration of a sealant fluid contained in the tank and fed to the liquid ring pump for the operation of the liquid ring pump; and

selectively adjust a concentration of the sealant fluid.

35. The system of claim 32, wherein the vacuum pump system further comprises:

a coolant source for injecting a coolant into the incoming multiphase stream prior to the incoming multiphase stream being input to the liquid ring pump at the suction port, the coolant having a temperature sufficient to condense liquid from the incoming multiphase stream.

36. The system of claim 32, further comprising:

a first supply vessel comprising the first fluid inlet and a first outlet coupled to the first processing station; and

a second supply vessel comprising the second fluid inlet and a second outlet coupled to the second processing station; the first and second fluid outlets being coupled to the chemical blender.

37. The system of claim 32, wherein the chemical blender is configured to mix a first chemical solution for delivery to the first processing station and mix a second chemical solution for delivery to the second processing station.

38. The system of claim 32, wherein the chemical blender comprises a concentration monitor operable to determine a concentration of at least one of a plurality of chemicals in a solution mixed by the chemical blender.

39. The system of claim 32, wherein the chemical blender comprises a concentration monitoring system configured to:

determine a concentration of at least one of a plurality of chemicals in a solution mixed by the chemical blender; and

upon determining that the at least one chemical in the solution is not at a predetermined concentration, add an amount of one or more fluids to the chemical blender until the at least one chemical is at the predetermined concentration.

40. The system of claim 39, wherein the chemical monitoring system is configured to prevent the solution being flowed to any of the processing stations until the at least one chemical is that the predetermined concentration.

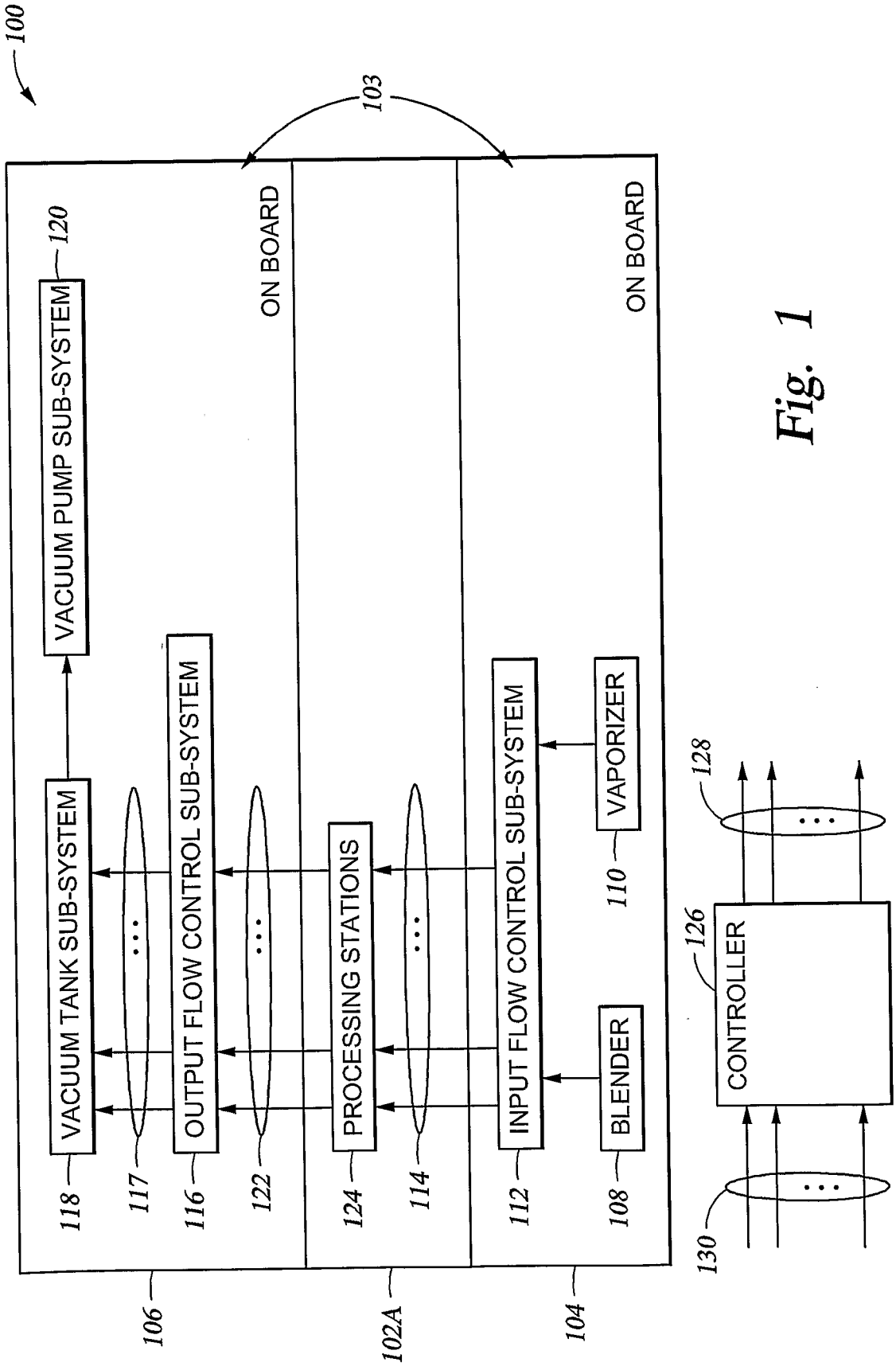
100
103
ON BOARD
ON BOARD
VACUUM PUMP SUB-SYSTEM
120
VACUUM TANK SUB-SYSTEM
OUTPUT FLOW CONTROL SUB-SYSTEM
PROCESSING STATIONS
INPUT FLOW CONTROL SUB-SYSTEM
VAPORIZER
BLENDER
CONTROLLER
118
117
116
122
124
114
112
110
108
126
128
130
106
102A
104

Fig. 1

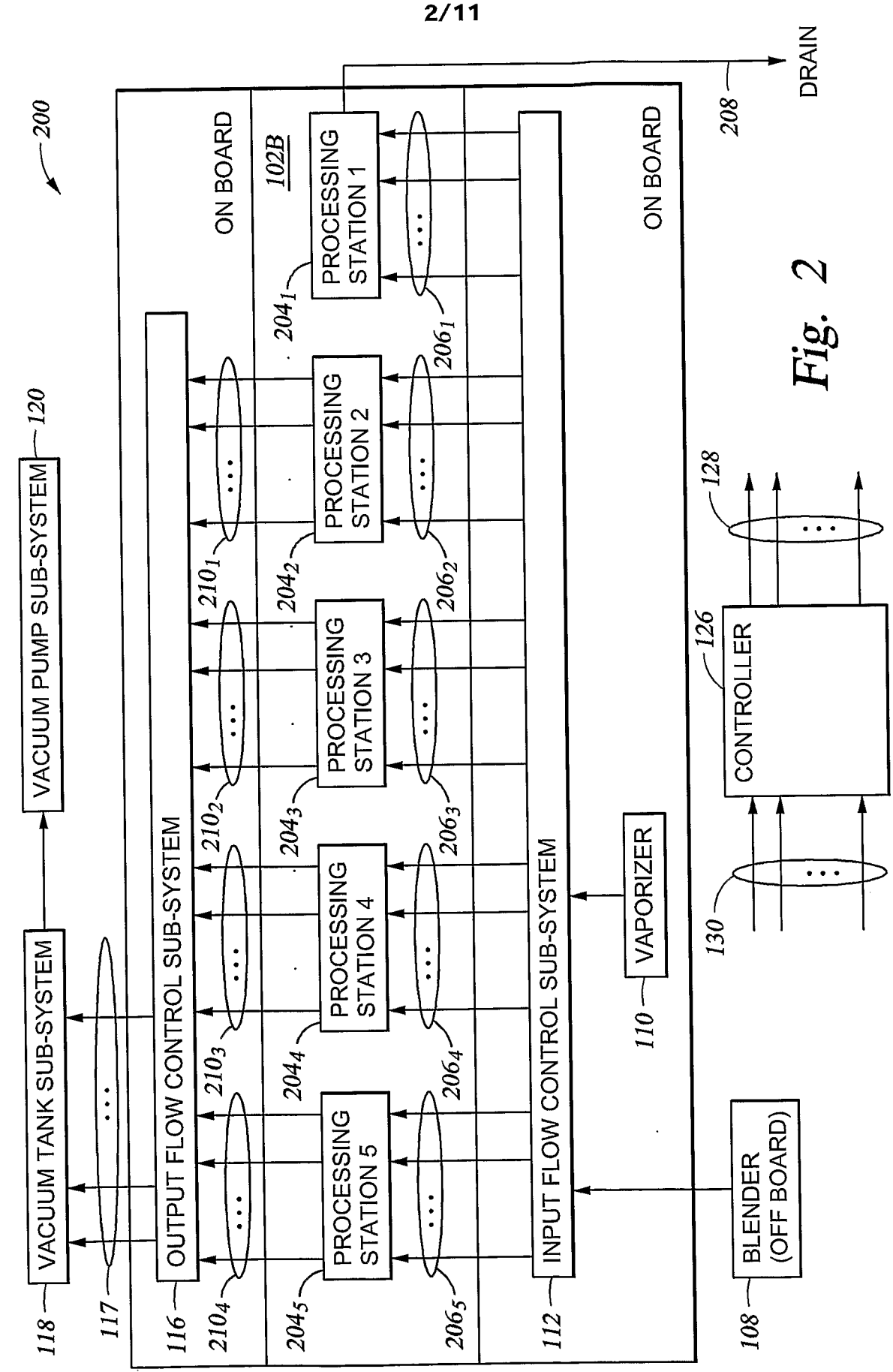
200
ON BOARD
102B
ON BOARD
PROCESSING STATION 1
PROCESSING STATION 2
PROCESSING STATION 3
PROCESSING STATION 4
PROCESSING STATION 5
204_1
204_2
204_3
204_4
204_5
206_1
206_2
206_3
206_4
206_5
210_1
210_2
210_3
210_4
116
OUTPUT FLOW CONTROL SUB-SYSTEM
112
INPUT FLOW CONTROL SUB-SYSTEM
117
118
VACUUM TANK SUB-SYSTEM
120
VACUUM PUMP SUB-SYSTEM
208
DRAIN
110
VAPORIZER
108
BLENDER (OFF BOARD)
126
CONTROLLER
128
130

Fig. 2

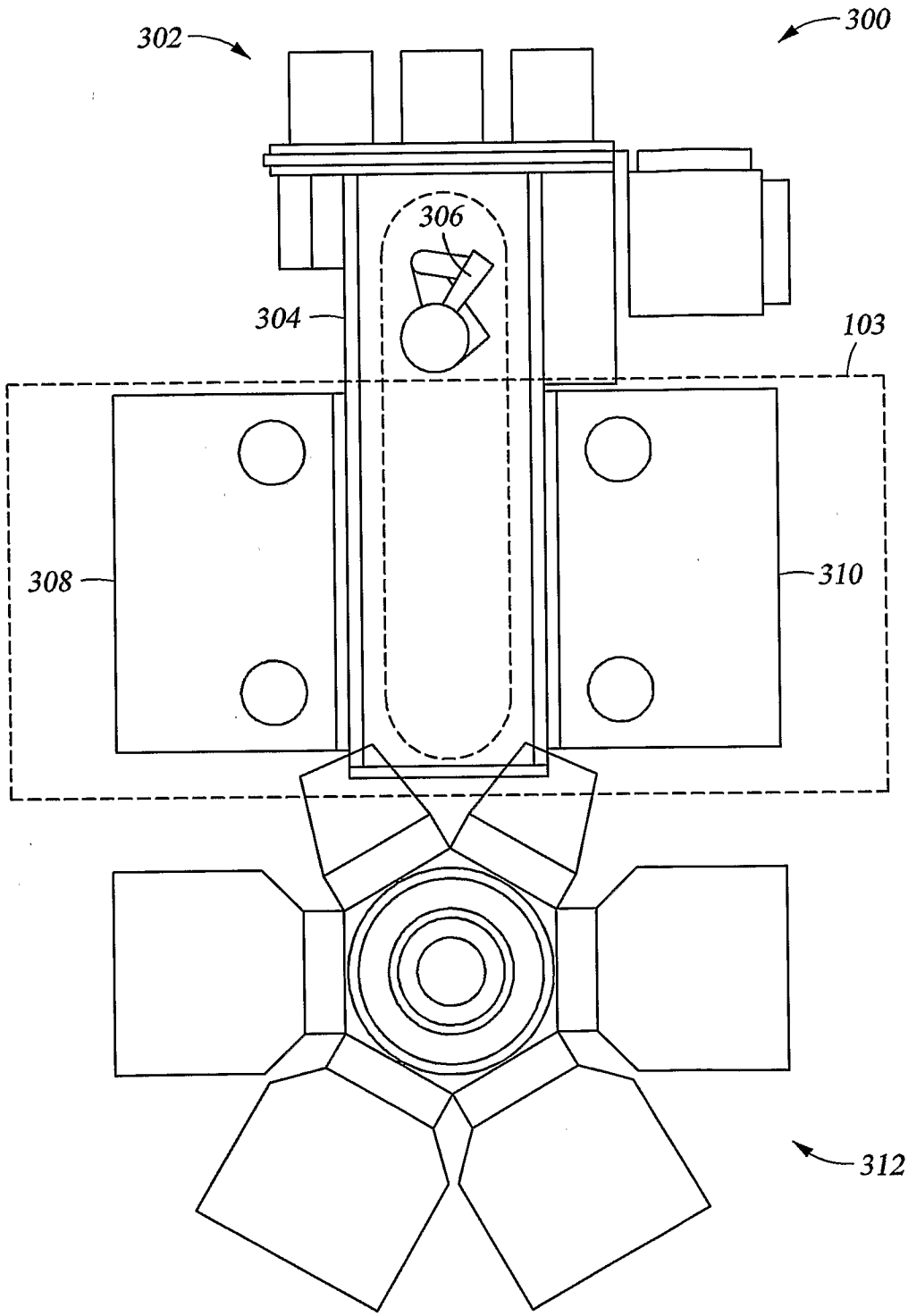

Fig. 3

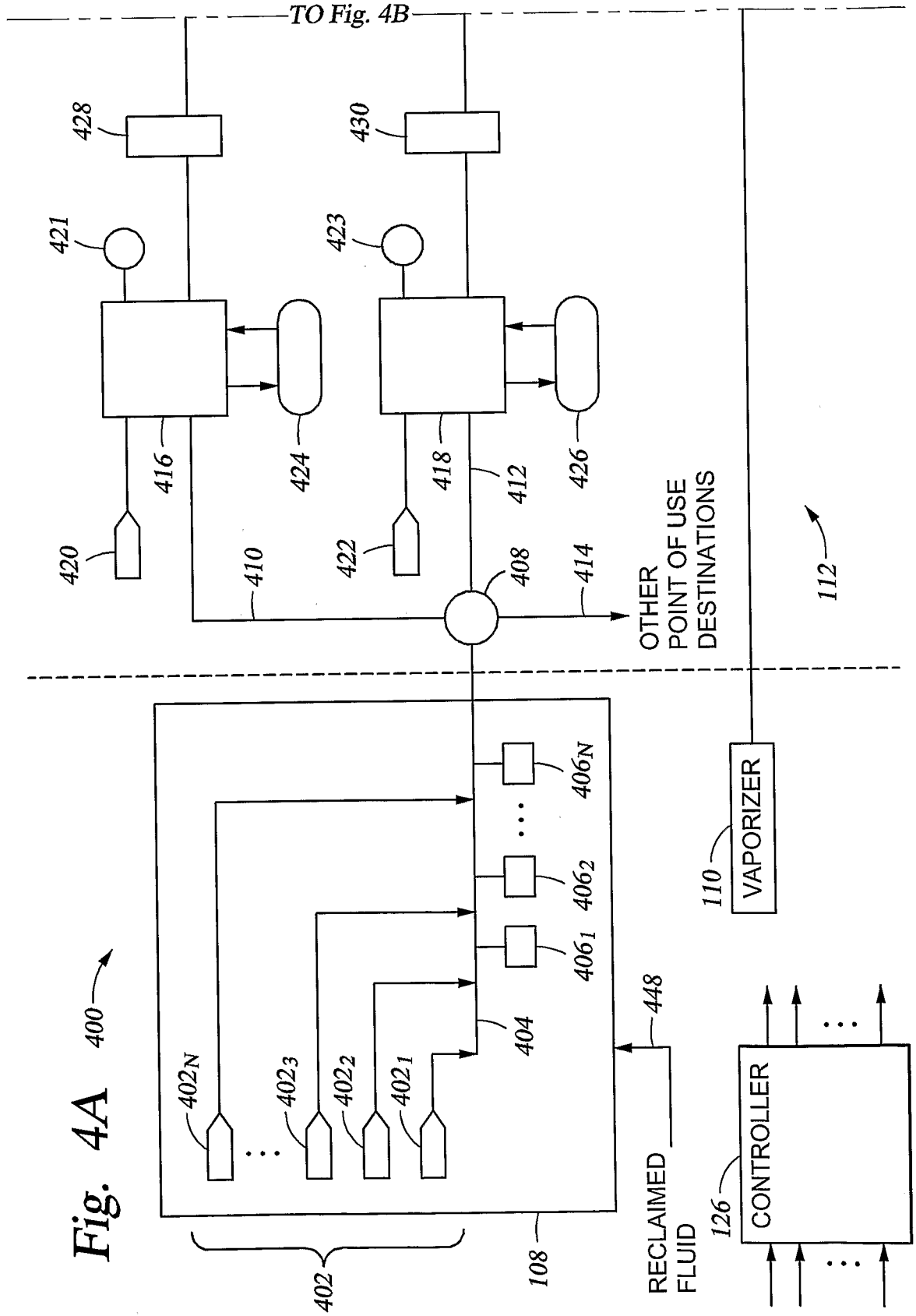
TO Fig. 4B
428
430
421
423
416
424
418
412
426
420
422
410
408
414
OTHER POINT OF USE DESTINATIONS
112
400
402N
402₃
402₂
402₁
404
406N
406₂
406₁
448
RECLAIMED FLUID
108
402
110
VAPORIZER
126
CONTROLLER

Fig. 4A

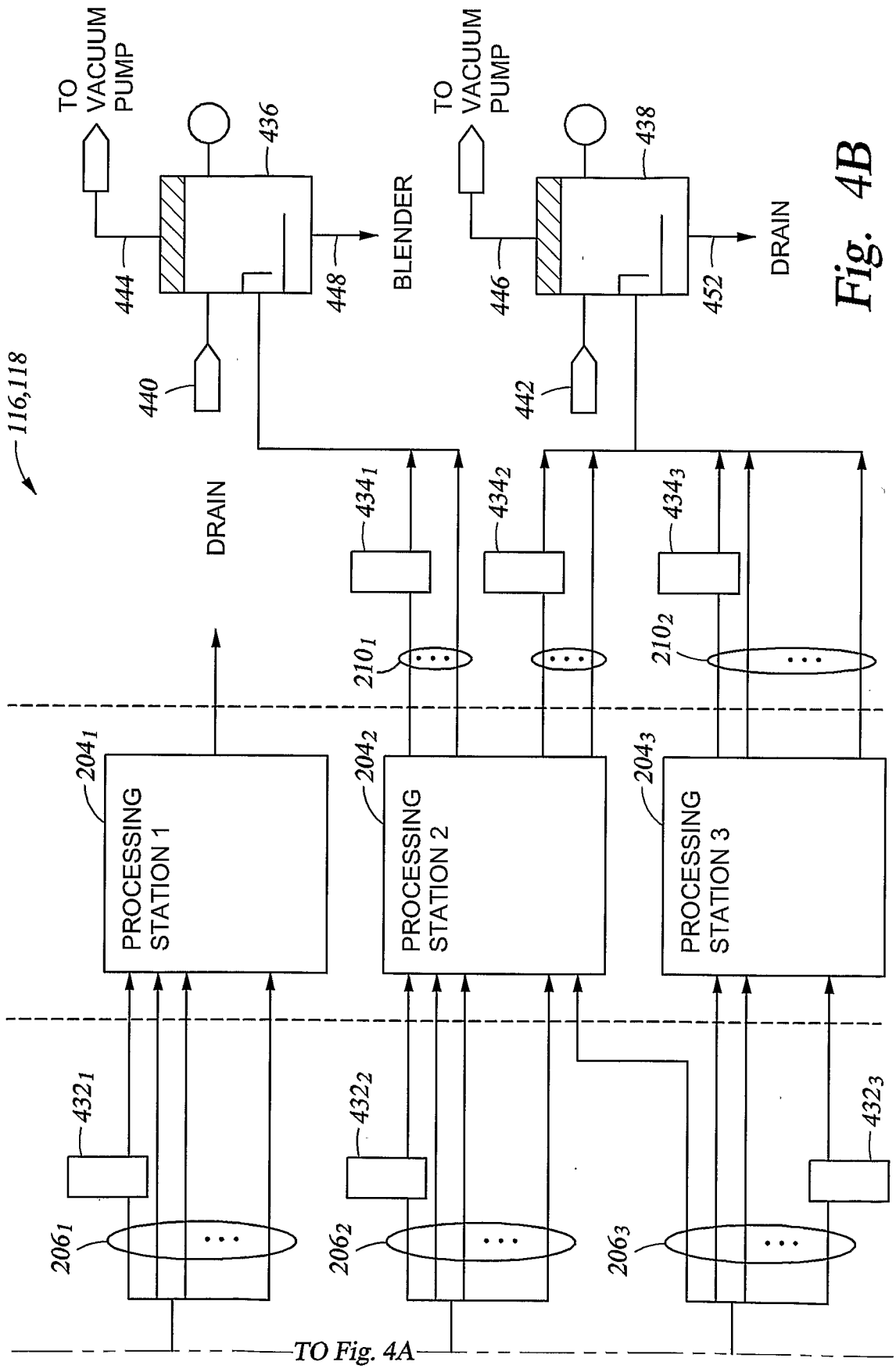
TO VACUUM PUMP
436
444
448
BLENDER
TO VACUUM PUMP
438
446
452
DRAIN
116,118
440
442
DRAIN
434_1
434_2
434_3
210_1
210_2
204_1
204_2
204_3
PROCESSING STATION 1
PROCESSING STATION 2
PROCESSING STATION 3
432_1
432_2
432_3
206_1
206_2
206_3
TO Fig. 4A

Fig. 4B

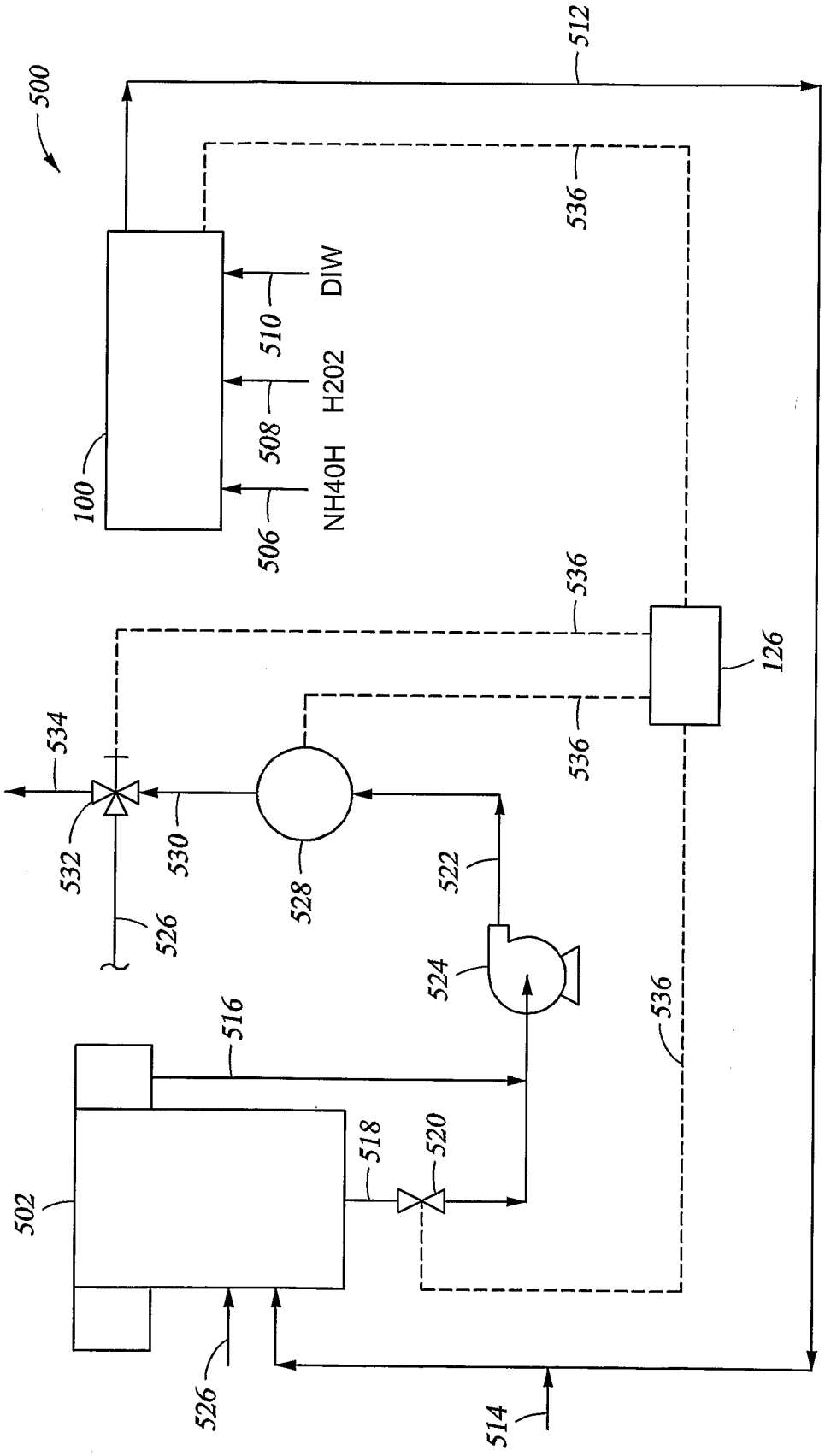
500
512
536
DIW
510
H202
508
NH40H
506
100
126
534
532
530
528
522
526
524
516
518
520
502
514

Fig. 5

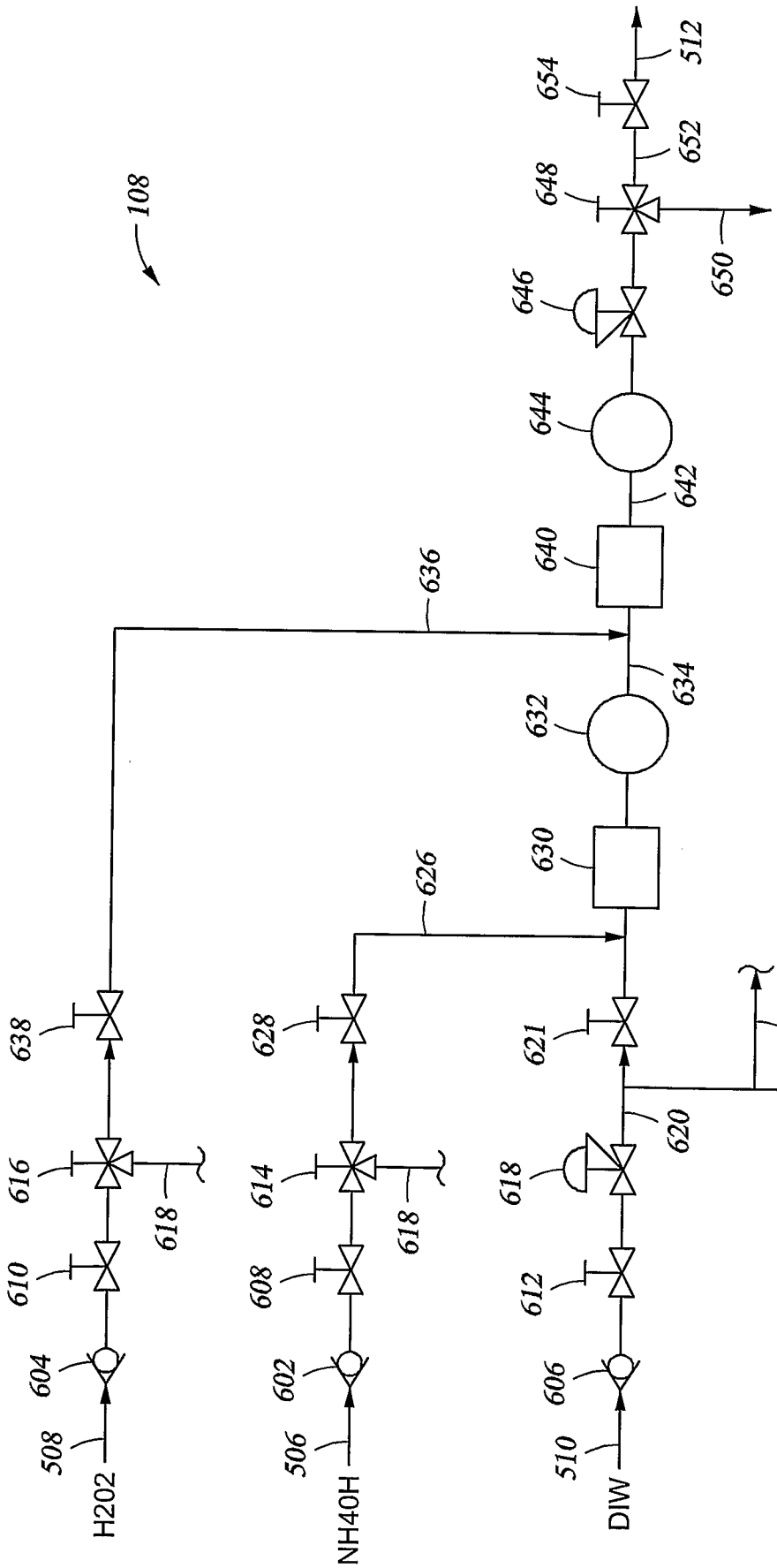
108
H202
NH40H
DIW
508
506
510
604
602
606
610
608
612
616
614
618
618
618
638
628
621
622
624
620
636
626
630
632
634
640
642
644
646
648
650
652
654
512

Fig. 6

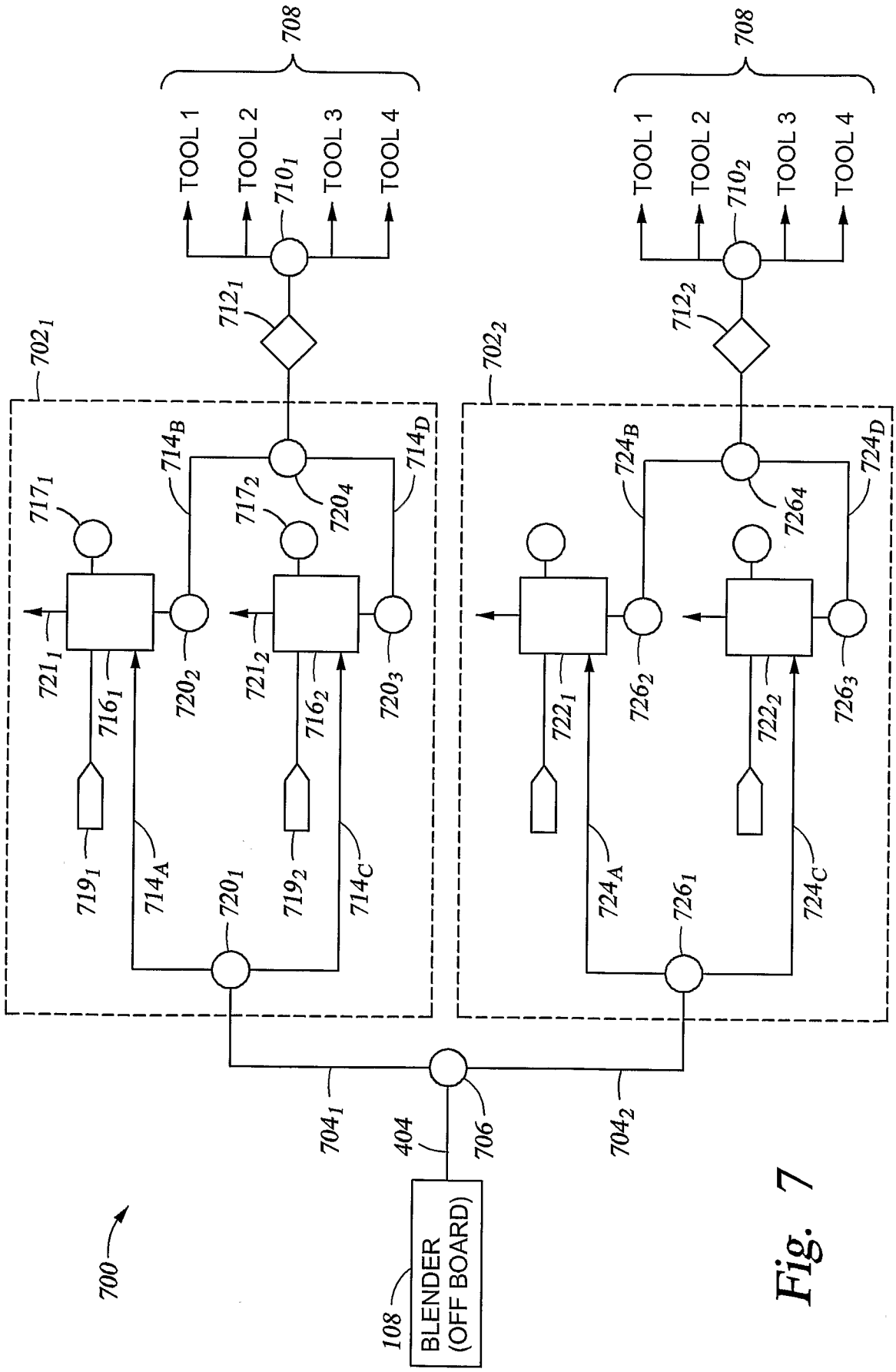
700
BLENDER (OFF BOARD)
108
404
706
704$_1$
704$_2$
702$_1$
702$_2$
708
TOOL 1
TOOL 2
TOOL 3
TOOL 4
710$_1$
710$_2$
712$_1$
712$_2$
714$_A$
714$_B$
714$_C$
714$_D$
716$_1$
716$_2$
717$_1$
717$_2$
719$_1$
719$_2$
720$_1$
720$_2$
720$_3$
720$_4$
721$_1$
721$_2$
722$_1$
722$_2$
724$_A$
724$_B$
724$_C$
724$_D$
726$_1$
726$_2$
726$_3$
726$_4$

Fig. 7

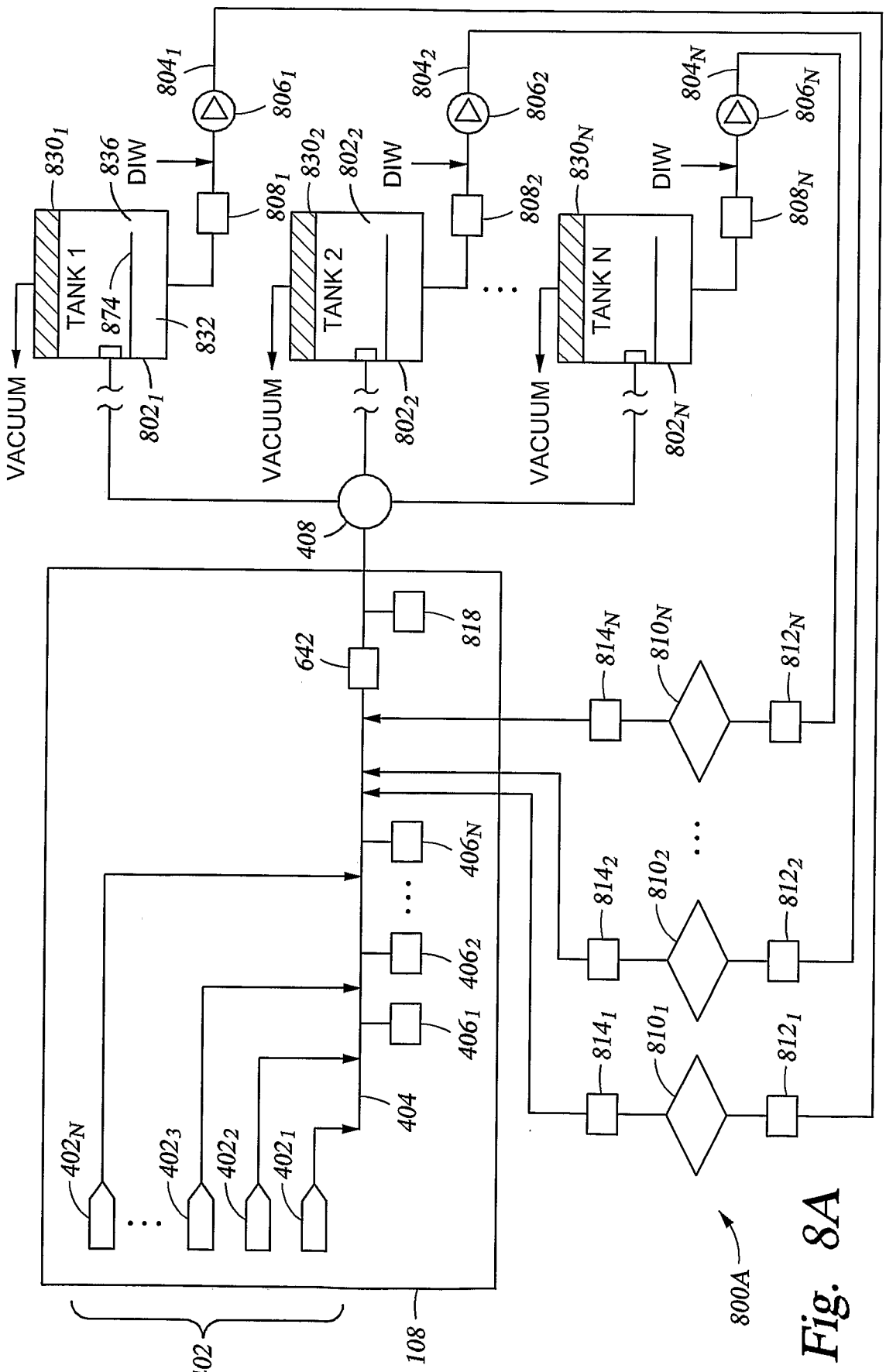

Fig. 8A

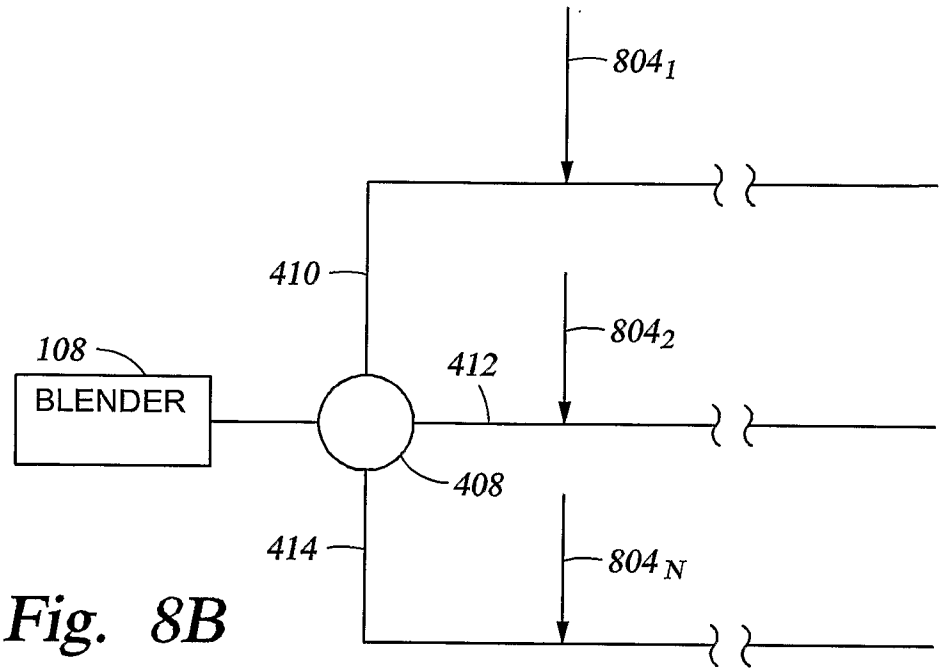
804_1
410
804_2
108
412
BLENDER
408
414
804_N

Fig. 8B

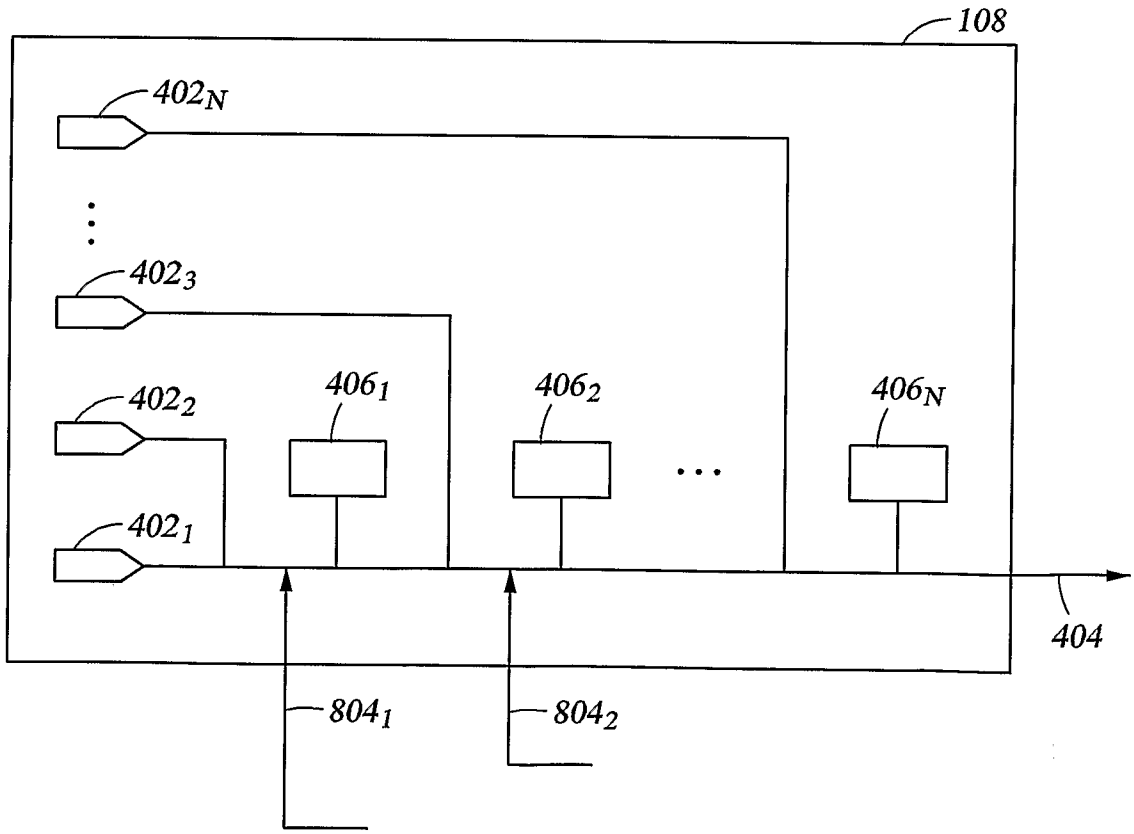
108
402_N
402_3
402_2
406_1
406_2
406_N
402_1
404
804_1
804_2

Fig. 8C

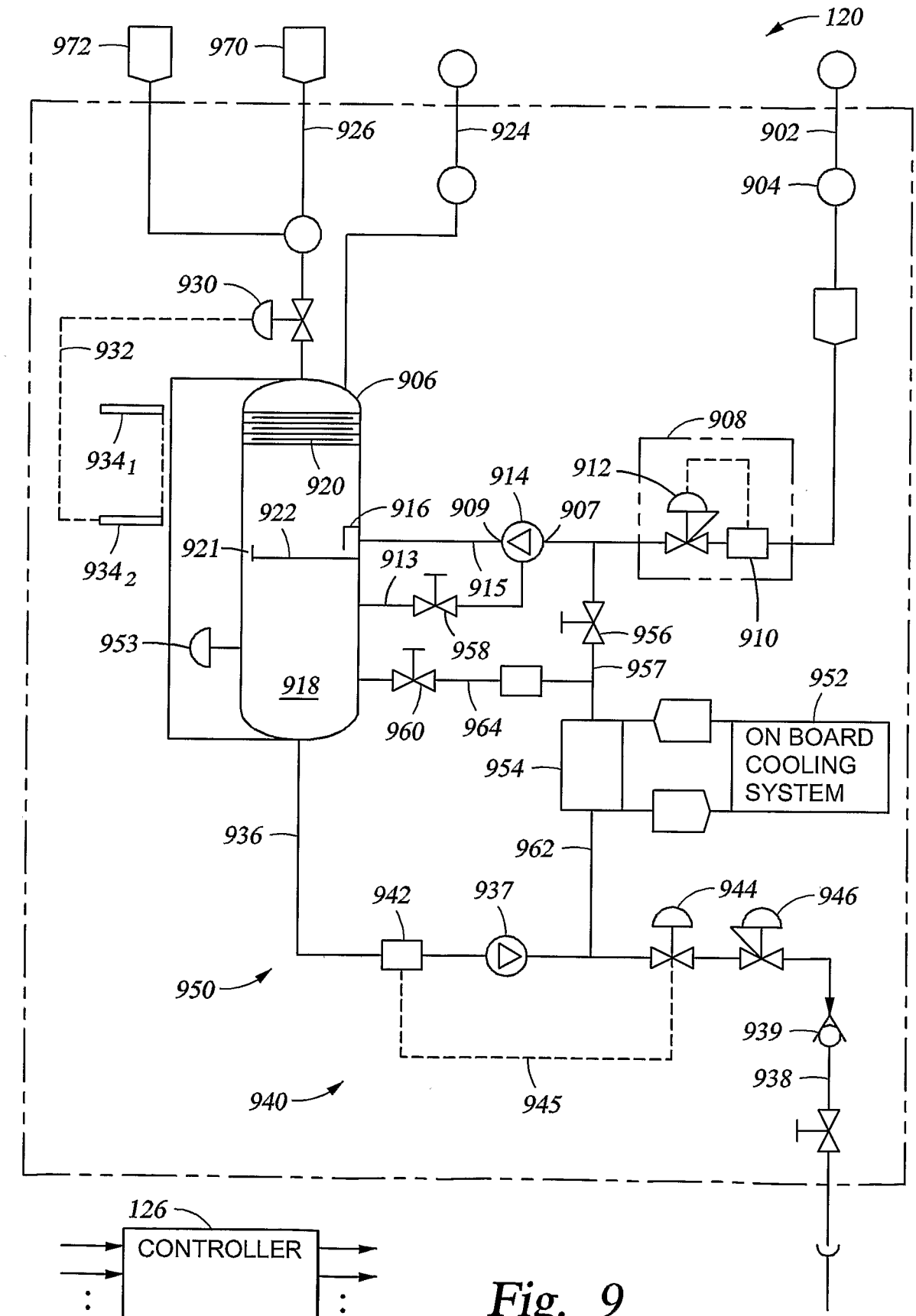
120
972
970
926
924
902
904
930
932
906
908
934_1
920
914
912
922
916
909
907
921
913
915
910
934_2
956
953
958
957
952
918
960
964
ON BOARD COOLING SYSTEM
954
936
962
942
937
944
946
950
939
938
940
945
126
CONTROLLER

Fig. 9

INTERNATIONAL SEARCH REPORT

International application No
PCT/IB2007/001250

A. CLASSIFICATION OF SUBJECT MATTER
INV. F04C19/00

According to International Patent Classification (IPC) or to both national classification and IPC

B. FIELDS SEARCHED

Minimum documentation searched (classification system followed by classification symbols)
F04C

Documentation searched other than minimum documentation to the extent that such documents are included in the fields searched

Electronic data base consulted during the international search (name of data base and, where practical, search terms used)
EPO-Internal, WPI Data

C. DOCUMENTS CONSIDERED TO BE RELEVANT

Category*	Citation of document, with indication, where appropriate, of the relevant passages	Relevant to claim No.
X	BANNWARTH H: "FLUESSIGKEITSRING-VAKUUMPUMPEN UND -KOMPRESSOREN IM SYSTEM" INDUSTRIEPUMPEN + KOMPRESSOREN, VULKAN VERLAG, ESSEN, DE, vol. 8, no. 4, November 2002 (2002-11), pages 192-197, XP001141276 ISSN: 0947-0654	1,2,4, 11,15
Y	page 3 - page 4; figures 2,3,5	3,5,7-9, 14, 16-18, 20-25, 27-30, 32-39

-/--

[X] Further documents are listed in the continuation of Box C.

[X] See patent family annex.

* Special categories of cited documents :

"A" document defining the general state of the art which is not considered to be of particular relevance

"E" earlier document but published on or after the international filing date

"L" document which may throw doubts on priority claim(s) or which is cited to establish the publication date of another citation or other special reason (as specified)

"O" document referring to an oral disclosure, use, exhibition or other means

"P" document published prior to the international filing date but later than the priority date claimed

"T" later document published after the international filing date or priority date and not in conflict with the application but cited to understand the principle or theory underlying the invention

"X" document of particular relevance; the claimed invention cannot be considered novel or cannot be considered to involve an inventive step when the document is taken alone

"Y" document of particular relevance; the claimed invention cannot be considered to involve an inventive step when the document is combined with one or more other such documents, such combination being obvious to a person skilled in the art.

"&" document member of the same patent family

Date of the actual completion of the international search	Date of mailing of the international search report
9 October 2007	26/10/2007

Name and mailing address of the ISA/	Authorized officer
European Patent Office, P.B. 5818 Patentlaan 2 NL – 2280 HV Rijswijk Tel. (+31–70) 340–2040, Tx. 31 651 epo nl, Fax: (+31–70) 340–3016	Descoubes, Pierre

Form PCT/ISA/210 (second sheet) (April 2005)

INTERNATIONAL SEARCH REPORT

International application No
PCT/IB2007/001250

C(Continuation). DOCUMENTS CONSIDERED TO BE RELEVANT

Category*	Citation of document, with indication, where appropriate, of the relevant passages	Relevant to claim No.
X	W.H. FARAGALLAH: "Liquid ring vacuum pumps and compressors" 1985, BELTZ OFFSETDRUCK , XP002454129 page 128 - page 129	1
X	DE 102 14 331 A1 (NASH ELMO IND GMBH [DE]) 23 October 2003 (2003-10-23) abstract; figures 1,2	11-13
Y	US 6 227 222 B1 (JENNINGS GARY [US]) 8 May 2001 (2001-05-08) column 4, line 9 - line 34; figure 3	3,14,21
Y	WO 2006/010121 A (ENTEGRIS INC [US]; ANDERSON GARY [US]; SIMPSON MIKE [US]; GOULD CHUCK) 26 January 2006 (2006-01-26) abstract; claims 1,6; figures 11,12	5,7-9, 16-18, 20, 22-25, 27-30, 32-39
A	JP 57 200695 A (SUMITOMO METAL IND) 8 December 1982 (1982-12-08) abstract	1-40

INTERNATIONAL SEARCH REPORT

International application No.
PCT/IB2007/001250

Box II Observations where certain claims were found unsearchable (Continuation of item 2 of first sheet)

This International Search Report has not been established in respect of certain claims under Article 17(2)(a) for the following reasons:

1. ☐ Claims Nos.:
because they relate to subject matter not required to be searched by this Authority, namely:

2. ☐ Claims Nos.:
because they relate to parts of the International Application that do not comply with the prescribed requirements to such an extent that no meaningful International Search can be carried out, specifically:

3. ☐ Claims Nos.:
because they are dependent claims and are not drafted in accordance with the second and third sentences of Rule 6.4(a).

Box III Observations where unity of invention is lacking (Continuation of item 3 of first sheet)

This International Searching Authority found multiple inventions in this international application, as follows:

see additional sheet

1. ☐ As all required additional search fees were timely paid by the applicant, this International Search Report covers all searchable claims.

2. ☒ As all searchable claims could be searched without effort justifying an additional fee, this Authority did not invite payment of any additional fee.

3. ☐ As only some of the required additional search fees were timely paid by the applicant, this International Search Report covers only those claims for which fees were paid, specifically claims Nos.:

4. ☐ No required additional search fees were timely paid by the applicant. Consequently, this International Search Report is restricted to the invention first mentioned in the claims; it is covered by claims Nos.:

Remark on Protest

☐ The additional search fees were accompanied by the applicant's protest.

☐ No protest accompanied the payment of additional search fees.

FURTHER INFORMATION CONTINUED FROM PCT/ISA/ 210

This International Searching Authority found multiple (groups of) inventions in this international application, as follows:

1. claims: 1-10, 27-31

   A liquid ring vacuum pump system with a suction pressure control

   ---

2. claims: 11-19

   A liquid ring vacuum pump system with an inlet contact condenser

   ---

3. claims: 20-26

   A liquid ring vacuum pump system with a chemical concentration control system

   ---

4. claims: 32-40

   A processing system with a liquid ring vacuum pump system and a chemical blender coupled to two processing stations

   ---

INTERNATIONAL SEARCH REPORT

Information on patent family members

International application No
PCT/IB2007/001250

Patent document cited in search report	Publication date	Patent family member(s)	Publication date
DE 10214331 A1	23-10-2003	AU 2003223974 A1 WO 03083307 A1	13-10-2003 09-10-2003
US 6227222 B1	08-05-2001	CA 2305962 A1	05-07-2001
WO 2006010121 A	26-01-2006	NONE	
JP 57200695 A	08-12-1982	NONE	