June 30, 1970 J. F. MICIUKIEWICZ 3,517,921

COMBINED COPY PAPER PRE-FEED AND TIMING MECHANISM FOR COPYING MACHINES

Filed May 21, 1968 2 Sheets-Sheet 1

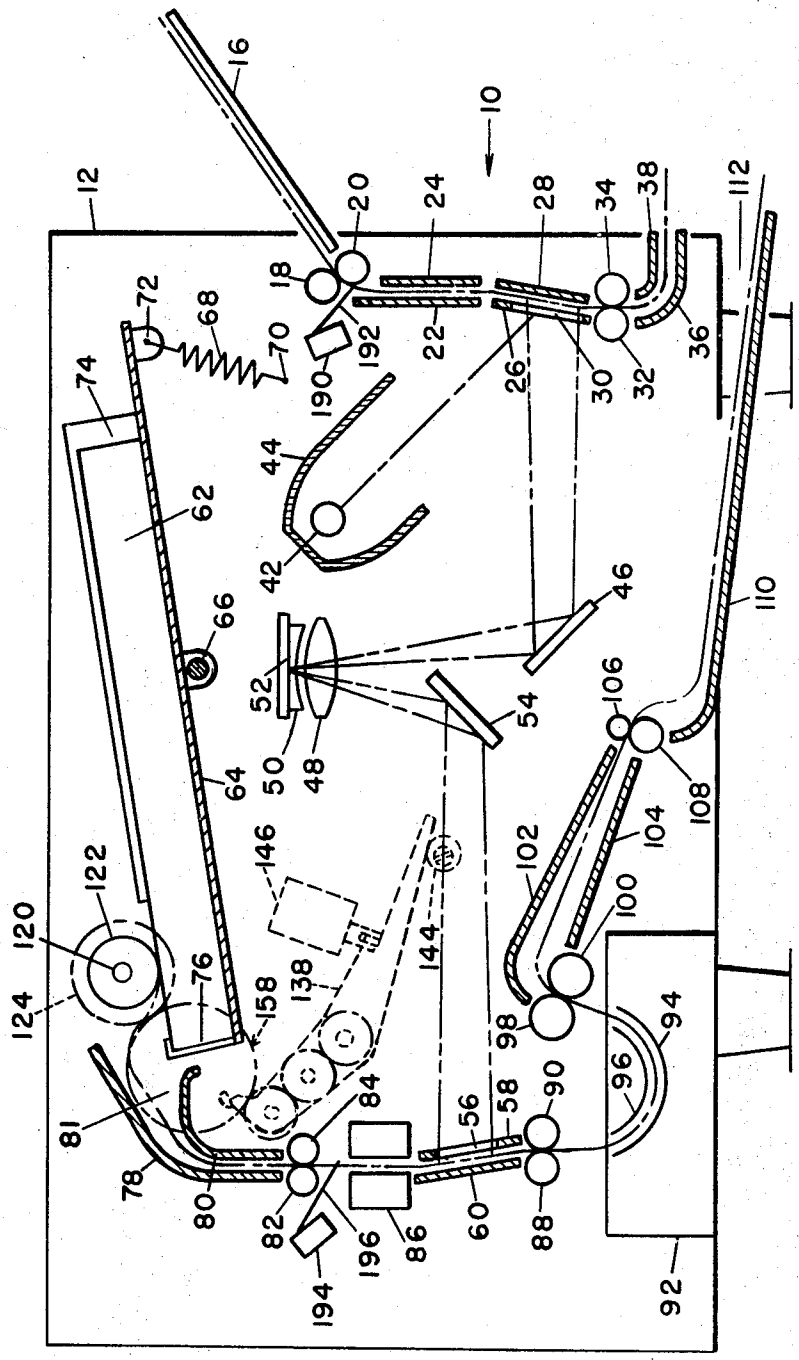

Fig 1

INVENTOR.
JOSEPH F. MICIUKIEWICZ
BY
Martin P. Wolfstein
ATTORNEY

June 30, 1970 J. F. MICIUKIEWICZ 3,517,921

COMBINED COPY PAPER PRE-FEED AND TIMING MECHANISM FOR COPYING MACHINES

Filed May 21, 1968 2 Sheets-Sheet 2

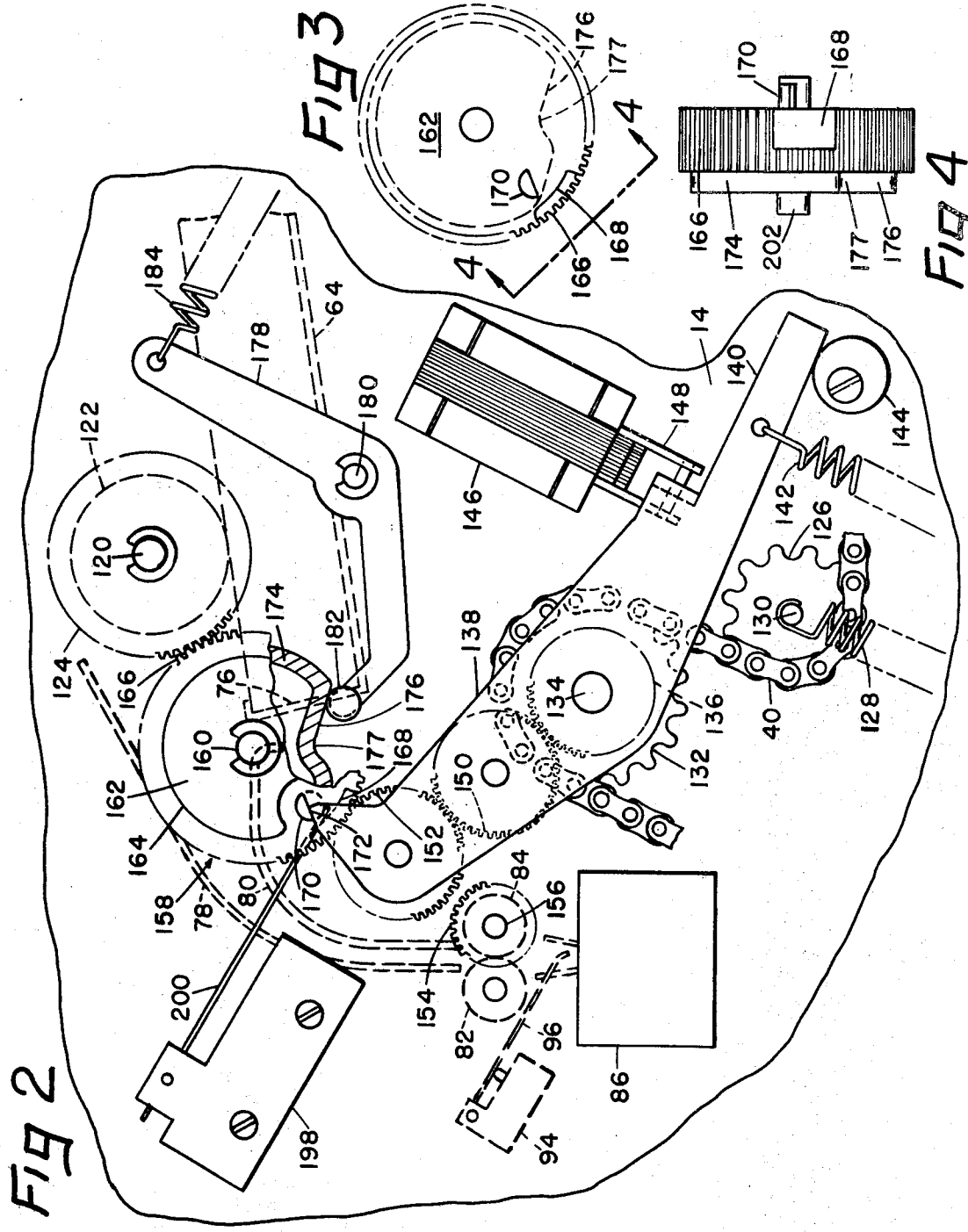

INVENTOR.
JOSEPH F. MICIUKIEWICZ
BY
Martin D. Wittstein
ATTORNEY

United States Patent Office 3,517,921 Patented June 30, 1970

3,517,921

COMBINED COPY PAPER PRE-FEED AND TIMING MECHANISM FOR COPYING MACHINES

Joseph F. Miciukiewicz, Trumbull, Conn., assignor to Pitney-Bowes, Inc., Stamford, Conn., a corporation of Delaware

Filed May 21, 1968, Ser. No. 730,765
Int. Cl. G03b 27/48
U.S. Cl. 271—8 22 Claims

ABSTRACT OF THE DISCLOSURE

A mechanism for use in a copying machine of the type utilizing pre-cut sheets of copy paper in which the copy paper sheets are stored in a supply tray and a sheet is normally maintained in an advanced or pre-fed position. The mechanism pre-feeds the topmost sheet from the supply tray to the advanced position preparatory to a subsequent copying cycle of operation, correlates the operation of feeding components for the copy paper according to varying length of copy paper and document for shortest possible copying time, and controls the operation of a lamp and charger during a current cycle of operation all under the control of switches actuated by the moving document and sheet of copy paper.

Background of the invention

This invention relates generally to improvements in feeding mechanism for copying machines and more particularly to a combined feeding mechanism and timing device for a copying machine utilizing copy paper in the form of cut sheets.

In copying machines of the type which utilize copy paper in cut sheet form as distinguished from roll form, the desirability has been recognized, as evidenced by U.S. Pats. 3,345,926 and 3,352,281, of pre-feeding of sheet of copy paper from a supply stack thereof to an advance or ready position as the final step in a preceding cycle of operation of the copying machine, so that the sheet of copy paper has advanced a predetermined distance along a copy paper path prior to the next copying operation.

The use of cut sheet copy paper is itself desirable in low cost copying machines since the need for a cutting mechanism as well as suitable controls for operating the cutting mechanism is eliminated. Also, cut sheet storage is more compact than roll paper storage, which is important in a relatively small desk top type copying machine. However, a major disadvantage in the use of cut sheet copy paper in most prior art copying machines is in the increased length of time required to make a single copy of an original document from the moment the document is inserted into the copying machine until the finished copy is delivered. The reason for this is that, in the design of the copier, it usually is not possible to locate the copy paper storage tray in a position which places the leading edge of the stack of paper as close to the copying components as is possible with a roll type copying machine, thereby increasing the length of the copy paper path and the time required to move a sheet through the path.

For example, in a machine utilizing roll paper, the roll can be stored in any desirable location with a web portion thereof leading to a cutting mechanism located immediately adjacent the copying components, e.g. the charger in an electrostatic type copying machine. In a cut sheet machine, however, design characteristics often require that the copy paper supply tray be disposed adjacent an edge of the copying machine with the charger

a considerable distance therefrom due to the configuration of the optical system and the desirability of keeping the charger as close as possible to the exposure area. Also, sufficient space must be allocated between the front edge of the supply tray and the charger for at least one pair of feed rollers which feed the sheet into the charger. Further, the design must provide for a level paper tray which is convenient for operator access for loading.

A practical solution to the problem of the increased length of time required to obtain a copy from a cut sheet type copying machine, as against the shorter time required to make the same copy in a roll paper type machine, is to normally store a sheet of copy paper in an advanced or ready position with its leading edge disposed as close as possible to the copying components of the machine. As shown in the above mentioned U.S. patents, this is most desirably accomplished by providing means for separating and feeding the topmost sheet of the stack of copy paper from the stack storage location to the ready position as a final step incident to a complete cycle of operation of the copying machine, or at least as an intermediate step while a preceding copy is being developed and delivered to the machine operator. Thus the time required to pre-feed the sheet of copy paper from the stack to the ready position is absorbed in the normal time required to process the copy made on a preceding sheet of paper, and is not made cumulative with the normal processing time for making a copy.

The present invention is directed to improve means for feeding a sheet of copy paper from a stack thereof to an advanced or ready position in the copying machine, and in this regard, constitutes an improvement on the corresponding means of the above mentioned patents. It is known to control the advance of a sheet of copy paper for a predetermined distance only under the control of a plurality of paper actuated switches which in turn control the operation of electric motors and/or clutches to start and stop a plurality of paper feeding devices according to a predetermined program. A major disadvantage of this arrangement resides in the relatively large number of paper actuated switches which must be employed to control the stopping and starting of the copy paper feeding mechanism to move a sheet over the required distance. Paper actuated switches are not only expensive due to their high degree of sensitivity, but also they are frequently a source of trouble due to the possibility of causing paper jams. This latter aspect is particularly undesirable in the copy paper path where it requires a considerable amount of disassembly of the machine to clear a jammed sheet of paper. In general, the more that paper actuated switches can be eliminated, the greater is the degree of reliability of trouble free operation of the copying machine.

Brief summary of the invention

The present invention obviates the foregoing disadvantages of prior art cut sheet type copying machines by providing a relatively simple yet reliable mechanical device for controlling both the time sequence and distance of pre-feeding of a sheet of copy paper. In addition, the device of the present invention also controls the instant and duration of energization of an illumination lamp and a corona discharge unit, thereby still further reducing the need for paper actuated switches which control this function in the known machines.

According to one embodiment of the present invention, there is provided a copying machine having a storage means for a stack of sheet of copy paper, a guiding and transporting means defining a path of travel having an infeed end adjacent the storage means and extending through the copying machine, means for continuously driving the transporting means, and means defining an

exposure zone spaced along the path of travel in which a sheet of copy paper is exposed to an image of indicia on an original document. In this combination the present invention is directed toward a mechanism for successively feeding sheets of copy paper from the storage means to the guiding and transporting means and comprises a first feeding means disposed adjacent the storage means for feeding the topmost sheet from the stack into the infeed end of the guiding means, and a second feeding means spaced along the path of travel between the infeed end thereof and the exposure zone, the second feeding means, which is preferably a pair of intermittently driven feed rollers, defining an advanced position for the leading edge of a sheet of copy paper. A clutch means is provided for alternately connecting the driving means to the first and second feeding means, the clutch means being operative to connect the driving means to the second feeding means at the beginning of a copying cycle of operation of the copying machine and to the first feeding means after the trailing edge of the sheet has passed the second feeding means. In order to control the movement of the sheet of copy paper there is provided means operatively associated with the clutch means and with the first feeding means for limiting the operation of the first feeding means, during the time that the clutch means is operative to connect the driving means to the first feeding means, to feed a sheet of paper from the storage means substantially only a distance sufficient to bring the leading edge of the sheet into operative engagement with the second feeding means, with the result that the sheet is moved from the storage means only to the advanced position and not beyond preparatory to a subsequent copying cycle of operation of the copying machine.

A significant aspect of the present invention is the fact that the clutch means is responsive to operation of a control means in the copying machine which may be either manually operated or may be operated automatically by sensing the leading and trailing edges of an original document. Thus the present invention is applicable both to book copiers where the original is merely placed on a platform for illumination and a copying cycle of the machine is initiated by a manual control, as well as to strictly document copiers where the document is inserted into a transporting system and the document itself automatically initiates a copying cycle of operation of the machine.

As will be made more clear hereinafter, the simplicity and reliability of the device of the present invention resides in the fact that the lead edge of the copy paper sheet is engaged preferably in the nip of a pair of feed rollers which are driven by the clutch means in synchronism with the main copy paper transport system only on demand as controlled by a manual or automatic control, these feed rollers becoming inoperative and thereby conditioned to receive the leading edge of the next sheet of copy paper as soon as the trailing edge of the previous sheet has passed by these feed rollers.

An advantageous feature of this invention resides in the fact that a mechanical motion of the means limiting the operation of the first feeding means to a feed a sheet only to the advanced position is utilized to control the energization of an illuminating lamp and copy paper charger so that further elimination of paper actuated switches to control these functions is achieved.

Having briefly described one embodiment of the present invention, it is a principal object thereof to provide a new and improved copy paper feeding mechanism for copying machines.

It is another object of the present invention to provide a copy paper feeding mechanism for copying machines which accurately pre-feeds a sheet of copy paper from a paper storage position to an advanced or ready position.

It is another object of the present invention to provide a copy paper feeding mechanism for copying machines which pre-feeds a sheet of copy paper from a storage position to an advanced or ready position as an intermediate or terminal step in the cycle of operation of the copying machine during which a copy is being made on a previously fed sheet of copy paper.

It is still another object of the present invention to provide a copy paper feeding mechanism for a copying machine which is operable to both advance a sheet of copy paper from a ready position into the copy paper transport system and to pre-feed the next sheet of copy paper from a storage position to the ready position in response to operation of either a manual or automatic paper actuated control.

It is yet another object of the present invention to provide a copy paper feeding mechanism for a copying machine which is operable to control the instant and duration of energization of an illuminating lamp and copy paper charger without the necessity of any additional paper actuated switches.

A further object of the present invention is to provide a copy paper feeding mechanism for a copying machine which has provision for sensing the length of copy paper sheets and documents being copied and for controlling the sequence of operation of feeding components to deliver copy in the shortest possible time.

It is a further object of the present invention to provide a copy paper feeding mechanism for a copying machine which is extremely simple in design and construction, is highly reliable and accurate in operation and is economical to manufacture.

These and other objects and advantages of the present invention will be more readily apparent from an understanding of the following detailed description of one embodiment of the present invention when considered in conjunction with the accompanying drawings in which:

FIG. 1 is a logitudinal sectional view through a copying machine embodying the present invention;

FIG. 2 is a side elevation drawn to an enlarged scale of the copy paper feeding mechanism of the present invention;

FIG. 3 is a side elevation of the one revolution drive element of the mechanism shown in FIG. 2; and

FIG. 4 is a view taken on the line 4—4 of FIG. 3.

Detailed description

Referring now to the drawings and particularly to FIG. 1 thereof, there is shown in diagrammatic form a copying machine **10** of the second type above mentioned wherein an original document is transported through the machine and in which the present invention may be utilized. Although a considerable amount of detail of construction has been omitted from FIG. 1 for the sake of clarity, which detail either forms no part of the present invention or is obvious to anyone skilled in the art to which the present invention relates, the figure nevertheless shows all of the major working components of an electrostatic copying machine with sufficient particularity to obtain a full and complete understanding of the paper feeding mechanism of the present invention.

More particularly, there is provided a generally rectangular frame comprising a pair of upstanding parallel side plates **12** and **14** (plate **14** being shown in FIG. 2) between which all of the interior components of the copying machine are mounted. Certain other components to be decribed hereinafter are mounted on the outside of plate **14**, and in practice the entire frame is covered with a suitable housing having access openings for ingress and egress of documents to be copied and for egress of copies.

A plate **16** suitably supported by the frame plates **12** and **14** and associated with an opening in the aforementioned housing defines an inlet guideway for original documents to be copied, and directs the leading edge of a document to the nip of pair of feed rollers **18** and **20** rotatably supported by the plates **12** and **14**. A pair of substantially vertical guide plates **22** and **24** define a portion of a document feed path which extend downwardly along the front edge of the copying machine. Another pair of guide

plates 26 and 28 define another portion of the document feed path which includes an illuminating station or zone defined by an elongate slit 30 formed in the guide plate 26. Adjacent the lower end of the guide plates 26 and 28 is another pair of feed rollers 32 and 34 which direct the document between the curved guide plates 36 and 38 which in turn direct the document out of the copying machine. All of the foregoing elements together define a guiding and transporting means for the original documents.

The pairs of feed rollers 18–20 and 32–34 are synchronously driven by means of a continuous moving drive chain 40, a portion of which is shown in FIG. 2. As will be more clear hereinafter, the chain 40 is driven by a suitable motor conveniently located in the copying machine, the chain 40 passing around suitable sprockets and gears connected to a plurality of sets of feed rollers and also passing around suitable idler sprockets in order to drive the feed rollers synchronously in a manner well known in the art. Only the sets of feed rollers specifically mentioned below are not directly driven by the chain 40.

In order to project an image of indicia on an original document to a sheet of copy paper for copying, an optical system is provided which comprises a source of illumination in the form of a lamp 42 and a projecting shield 44 which concentrates the light from the lamp 42 on the illuminating station defined by the slit 30 in the guide plate 26. Rays of light are reflected from a document passing by the slit 30 to a mirror 46 which directs the rays of light through a focusing lens 48 to a reflex lens 50 having a reflecting surface 52. The rays of light are then reflected back through the focusing lens 48 to another mirror 54 which directs the rays of light to an elongate slit 56 formed in a guide plate 58 which, together with a juxtaposed guide plate 60, defines an exposing station or zone for a sheet of copy paper which is fed between the guide plates 58 and 60 by means hereinafter described. It will be apparent to those skilled in the art that all of the foregoing elements of the optical system are suitably supported in the positions shown in FIG. 1 by mountings or brackets which are connected, directly or indirectly, to the frame plates 12 and 14.

The guide plates 58 and 60 are part of a guiding and transporting means defining a path of travel through which sheets of copy paper are fed from a supply thereof through a charging device, the exposing station, and through a developing and drying station to a discharge location accessible to an operator. More particularly, a stack of copy paper 62 is supported by a copy paper storage tray 64 which is pivotally supported by a shaft 66 mounted in the frame plates 12 and 14. A spring 68 connected at one end 70 to one of the frame plates and at the other end 72 to the rear end of the copy paper tray 64 urges the tray 64 in a clockwise direction about the shaft 66. The tray 64 is provided with a side guide 74 along each side of the tray 64 which centers the stack 62 of copy paper, and a corner separator 76 of known construction is mounted on the front corners of the tray 64 to assist in separating the topmost sheet from the rest of the stack when the sheet is fed in a manner described hereinafter.

Positioned adjacent the front end of the paper supply tray 64 is a first guide plate 78 and a second juxtaposed guide plate 80, the guide plates 78 and 80 being suitably shaped so as to provide a relatively wide infeed opening 81 into the copy paper path of travel and to define a gradually restricted path which leads into a vertical portion to thereby direct the leading edge of a sheet of copy paper to the nip of a pair of feed rollers 82 and 84. This pair of feed rollers, which is a second feeding means of the invention as hereinafter more fully described, defines an advanced position to which a sheet of paper is initially fed from the storage tray 64.

Located downwardly from the feed rollers 82 and 84 is a corona discharge device 86 of known construction which imparts a uniform electrostatic charge to the sheet of copy paper passing therethrough. A pair of feed rollers 88 and 90 feeds the sheet of copy paper from the exposing station 56 into a developing tank 92 which contains a suitable toner for developing the latent electrostatic image left on the copy paper after it passes the exposing station 56. Suitable guide elements 94 and 96 guide the sheet of copy paper through the toner tank 92 and direct the leading edge of the sheet to another pair of feeding rollers 98 and 100 which also act as squeegee rollers to squeeze all excess toner off of the copy paper. A pair of juxtaposed guide plates 102 and 104 guide the sheet of paper through a drying zone and to a final pair of feed rollers 106 and 108 which deliver the copy sheet to a receiving tray 110 in which the finished copy sheet is accessible to an operator through an opening 112 formed in the front of the housing.

Coming now to the mechanism for successively feeding sheets of copy paper from the storage tray to the copy paper guiding and transporting means so that the leading edge thereof arrives at the exposing station in synchronization with the arrival of the leading edge of an original document at the illuminating station, and referring first to FIG. 1, there is shown a first feeding means comprising a shaft 120 rotatably supported by the side plates 12 and 14 in a position overlying the forward or feeding end of the paper storage tray 64. The shaft 120 fixedly carries at least one feed roller 122 and preferably a plurality of feed rollers which, when rotated by the shaft 120, feed the topmost sheet from the stack 62 into the infeed end of the copy paper path hereinabove described. The shaft 120 carries a gear 124 located on the outer side of the frame plates 14 and therefore is shown in phantom lines in FIG. 1 and in solid lines in FIG. 2. Additional portions of the copy paper feeding mechanism are also shown in phantom lines in FIG. 1 for the sake of relating the location of the structure shown in FIG. 2 to the rest of the copying machine shown in FIG. 1. The gear 124 is drivingly connected to the shaft 120 by any suitable overriding or one way drive means so that the shaft 120 and feed rollers 122 are driven in a clockwise direction as viewed in the figures when the gear 124 is driven in the same direction, but the feed rollers 122 and shaft 120 can rotate in a clockwise direction independently of rotation of the gear 124. Thus after the feed rollers 122 have fed the sheet a predetermined distance to the advanced position defined by the feed rollers 82 and 84, the latter when actuated as hereinafter described, can pull the remainder of the sheet from the storage tray 64 without altering the position of the gear 124 and other elements associated therewith as fully explained below.

Referring to FIG. 2, it will be seen that the chain 40, which it will be recalled is continuously driven during the time that the copying machine is in an "on" conditions, passes around a floating idler sprocket 126 which is urged downwardly by a tension spring 128 connected between the idler sprocket shaft 130 and the frame plate 14, thereby maintaining proper tension on the chain 40. The chain also passes around and drives a sprocket 132 rotatably carried by a stub shaft 134 mounted on the plate 14. A gear 136 is rigidly connected to the sprocket 132 for rotation therewith.

In order to alternately connect the driving means to the first and second feeding means, there is provided a clutch means which, in the preferred embodiment, comprises a lever 138 pivotally carried by the stub shaft 134 and having a tail portion 140 to which is connected a spring 142 which urges the lever 138 in a clockwise direction about the stub shaft 134 and normally maintains the tail portion 140 in contact with an adjustable stop member 144. A solenoid 146 has its core 148 connected to the lever 138 intermediate the shaft 134 and the tail portion 140 so that when the solenoid is energized the lever 138 is pivoted about the shaft 134 in a counter-

clockwise direction against the restoring force of the spring **142**. Energization and deenergization of the solenoid **146** is controlled preferably by paper sensing switches in a manner described below.

The lever **138** rotatably carries a first gear **150** which meshes with the gear **136**, and a second gear **152** which meshes with the gear **150** whereby rotation of the gear **136** by the drive chain **40** also drives the gear **152**. The gear **152** is adapted to mesh alternately with a gear **154** fixedly carried by an extension of the shaft **156** on which the feed roller **84** is mounted, and another gear generally designated **158** rotatably carried by a stub shaft **160** mounted on the plate **14**. Thus the lever **138**, the solenoid **146**, the spring **142** and the gears **136**, **150** and **152** all constitute a paper actuated clutch means for alternately connecting the drive chain **40** into driving engagement with the gear **154** or the gear **158**, the clutch means being in the former condition to drive the feed rollers **82** and **84** when the solenoid **146** is energized and being in the latter condition to drive the gear **158** when the solenoid **146** is deenergized.

The gear **158** is actually an intermittently operable drive transfer element and forms part of a means for limiting operation of the feed rollers **122**, even while the clutch means is in its normal position to connect the driving means to the feed rollers **122**, to feed a sheet only the predetermined distance between the supply tray **64** and the advanced position. In the preferred embodiment, this drive element is a partially mutilated gear which is adapted to make one revolution in response to engagement therewith by the gear **152**, after which the element **158** stops turning until the gear **152** is released from engagement with the element **158** by the clutch means and is reengaged therewith after a certain period of engagement with the gear **154**. By operation of this element, the rollers **122** are effective to pre-feed the topmost sheet of copy paper from the stack to a position where the lead edge of said sheet is in contact with the nip of the feed rollers **82** and **84**, after which the rollers **122** stop feeding even though the gear **152** of the clutch means remains engaged with the drive transfer element **158**.

More particularly, and referring to FIGS. 2–4, the element **158** comprises a disc **162** having an annular rim **164** with teeth **166** formed thereon which extend across the width of the rim **164**. A recess **168** is formed in the rim adjacent one side thereof, the recess extending across approximately one-half the width of the rim **164**. The gear **152** is approximately the same width or a little less than the depth of the recess **168** and is mounted on the lever **138** so as to be in alignment with the recess **168** with the result that the teeth of the gear **152** do not mesh with the teeth **166** of the element **158** when the recess **168** is adjacent the gear **152**. Thus the gear **152** cannot drive the element **158** even though the solenoid **146** is deenergized until the element **158** is rotated by other means to move the recess **168** away from the position shown in FIG. 2.

The element **158** is also provided with a semi-circular stud **170** which projects outwardly from the outer face of the element **158** as viewed in FIG. 2, the stud **170** making contact with a nose **172** formed on the end of the lever **138** to thereby prevent rotation of the element **158** until the lever **138** is rocked by energization of the solenoid **146**. The element **158** is also provided with a cam track **174** formed on the inner surface of the element **158**, the cam track following a circular path adjacent the rim **164** for most of the circumference of the cam track, but having a somewhat radially inwardly extending flat portion **176** disposed in angularly offset relationship with the recess **168** and terminating in a curved detent portion **177**.

A spring loaded actuator in the form of a lever **178** is pivotally carried by a stud **180** mounted on the frame plate **14**, the lever **168** rotatably carrying a cam follower roller **182** adjacent the cam track **174**. A tension spring **184** connected between the opposite end of the lever **168** and the frame plate **14** forcibly urges the lever in a clockwise direction about the pivot stud **180** so as to maintain firm contact between the roller **182** and the cam track **174**.

The operation of the drive transfer element **158** in conjunction with the clutch means described above is as follows: When the solenoid **146** is energized by means described below, the lever **138** is rocked counterclockwise about the stub shaft **134** to simultaneously move the nose **172** out of contact with the stud **170** on the element **158**, and to engage the gear **152** with the gear **154**, thereby driving the feed rollers **82** and **84**, since, it will be remembered, the chain **40**, sprocket **182**, and gears **136**, **150** and **152** are continuously rotating. As soon as the nose **172** moves beyond the stud **170**, the roller **182**, bearing on the flat **176** of the cam track **174**, moves the gear **158** through a small angular distance until the roller **182** comes to rest in the detent portion **177** but sufficient to move the recess **168** away from its position adjacent the element **152**. This movement of the element **158** is caused by the upward force exerted on the flat portion **176** of the cam track **174** by the roller **182** as a result of the strong pulling force of the spring **184** acting through the lever **178**.

When the solenoid **146** is deenergized, the spring **142** returns the lever **138** to the position shown in FIG. 2 whereupon the gear **152** is disengaged from the gear **154** and is engaged in driving relationship with the teeth **166** of the drive transfer element **158** to rotate the latter. Rotation of the element **158** rotates the gear **124** which rotates the shaft **120** through the one way drive means mentioned above which in turn rotates the feed rollers **122**. This continues until the recess **168** again comes around to a position adjacent the gear **152** at which point the gear **152** ceases to have driving engagement with the element **158**, and the stud **170** is again in engagement with the nose **172** of the lever **138**. Also, during rotation of the element **158** the cam follower roller **182** has been following the circular portion of the cam track **174**. The location of the recess **168** and the flat portion **176** just before the teeth of the gear **162** disengage from the teeth **166** of the element **158** so that the roller **182** moves a short distance along the flat portion **176** of the cam track. This is to assure that the roller **182** will maintain the stud **170** in engagement with the nose **172** of the lever **138** so as to properly position the recess **168** adjacent the gear **152** and prevent any binding or scraping of the teeth of the gear **152** and the element **158** when the latter is in its static condition. Thus it will be seen that the element **158** makes one complete revolution each time the solenoid **146** is energized and deenergized. The relative diameters of the element **158** and gear **124**, and the feed rollers **122**, are selected so that the topmost sheet of copy paper is fed a distance sufficient to move the lead edge of the sheet from its normal position in the stack to a position of engagement with the nip of the feed rollers **82** and **84** during the same one revolution of the element **158**.

In order to relate the operation of the above described clutch mechanism and the first and second copy paper feeding means to the overall operation of the copying machine **10**, reference will now be made to FIG. 1. It will be seen that a control means in the form of a switch **190** is located adjacent the entrance to the original document path, the switch **190** having a paper sensing actuator **192** disposed in the document path. The actuator **192** is located upstream from the illuminating area **30** a distance approximately equal to the distance between the exposing area **56** and the nip of the feed rollers **82** and **84** in order to assure that the leading edges of the original document and the copy paper arrive at the illuminating and exposing areas respectively at the same time.

The switch **190** controls the energization of the solenoid **146** to energize the latter in response to operation of the

switch **190** by the leading edge of a document and to de-energize the solenoid in response to operation of the switch **190** by the trailing edge of the document. Assuming that the document is the same length as the copy paper stored in the machine, it will be understood that the trailing edge of the document will actuate the switch **190** to de-energize the solenoid **146** at about the same instant that the trailing edge of the sheet of copy paper leaves the nip of the rollers **82** and **84**. A second switch **194** is located in the copy paper path adjacent the feed rollers **82** and **84** and has a paper sensing actuator **196** disposed in the paper path. This switch is connected to the solenoid **146** in parallel with the switch **190** in order to assure that the copy paper feed mechanism will run a full normal cycle of operation even if an original document is inserted into the machine which is shorter than the length of copy paper in the stack **62**, since the copy paper feeding mechanism is intended to feed a standard size sheet of paper. Also, the switches **190** and **194** combine in function to control the operation of the clutch means and hence the first and second feeding means to deliver a copy in the shortest possible time. This is particularly so when making multiple copies or successive copies.

A significant feature of the present invention is the utilization of the motion of the drive transfer element **158** to control the energization and deenergization of the lamp **42** and the charger **86** in synchronism with the initiation of a copying cycle of operation and with passage of the trailing edge of a document and a sheet of copy paper through the illuminating and exposing areas respectively. Thus, a third switch **198** (FIG. 2) is mounted on the plate **14** and has an actuator finger **200** extending toward the element **158** and lying in a position to be alternately moved and released by a stud **202** which projects from the rear face of the element **158** in axial alignment with the stud **170** projecting from the front face of the element **158**. The actuator finger **200** terminates at the stud **202** so that it is released for movement away from the switch **198** as soon as the element **158** is rotated the small angular movement by the roller **182** and the spring loaded lever **168**. This movement of the actuator finger **200** closes the switch **198** which closes suitable circuits to energize the illuminating lamp **42** and the copy paper charger **86**. The switch **198** remains closed until the element **158** completes its copy paper driving movement after the solenoid **146** is deenergized and returns to the position shown in FIG. 2, whereupon the stud **202** again engages the actuator finger **200** to open the switch **198**, thereby turning off the lamp and charger. Thus it will be seen that the element **158** which controls the copy paper pre-feed function also functions as a timing device to control the moment and duration of energization of the lamp and charger during a normal copying cycle of the machine, and assurs that the lamp and charger will remain energized until the document and copy paper have cleared their respective illuminating and exposing areas.

A complete cycle of operation of the copying machine will now be described with reference to the drawings. An original document is placed on the shelf **16** from which it slides into the nip of the feed rollers **18** and **20**. After being picked up by the feed rollers, the leading edge of the document closes the switch **190** which energizes the solenoid **146** to shift the clutch mechanism into driving engagement with the gear **154**. The rollers **82** and **84** then begin to feed the sheet of copy paper which has been pre-fed to the advanced position where the leading edge of the sheet is engaged in the nip of the rollers **82** and **84** during the previous cycle of operation of the machine **10**.

As soon as the clutch mechanism shifts, the drive transfer element **158** rotates slightly so that the stud **202** releases the actuator finger **200** whereupon the switch **198** turns on the lamp **42** and the charger **86**. The original document and the sheet of copy paper advance in synchronism through their respective paths, the copy paper first passing through the charger **86** and then through the exposing area while the document is approaching and passing through the illuminating area. When the feed rollers **82** and **84** initially feed the copy paper sheet, the trailing end portion of the sheet which is still overlying the stack pulls the feed rollers **122** in the feeding direction by virtue of the one way drive connection between the gear **124** and the shaft **120**.

The clutch mechanism is held in driving engagement with the gear **154** until the trailing end of the document actuates the switch **190** or the trailing end of the copy paper sheet actuates the switch **194**, whichever occurs later, at which time the solenoid **146** is deenergized and the clutch mechanism shifts back to its spring loaded position. The gear **152** then drives the element **158** through one revolution in the manner explained above, during which time the gear **124**, the one way drive means, the shaft **120** and the rollers **122** feed the next sheet of copy paper into the copy paper path until the leading edge thereof is in the nip of the feed rollers **82** and **84**. At this point the stud **202** will again engage the actuator finger **200** to close the switch **198** to turn off the lamp and charger, but by this time the trailing edges of both the document and the sheet of copy paper have cleared their respective illuminating and exposing areas. The original document is directed out of the machine by the guide plates **36** and **38** while the exposed copy sheet continues through the toner tank **92** for developing and is directed to the discharge receiving tray **110**. The copying machine is ready for another copying cycle of operation as soon as the element **158** has completed one revolution and returned to its home position which condition may be conveniently indicated by an indicator light suitably wired through other contacts of the switch **198**.

As a practical matter, the dimensions of the feed rollers **122** and driving gear **124** are selected so that in the course of one revolution of the drive transfer element **158**, the rollers **122** feed a greater length of a sheet of copy paper than is necessary to bring the leading edge thereof to the nip of the feed rollers **82** and **84**. The reason for this is to create a bend or curved buckle in the sheet in the area of the entrance opening **81** to the copy paper path so as to assure that the leading edge of the sheet will not be skewed when it is fed into the charger **86**, and finally so that the sheet remains in the proper advanced position for long periods of time if necessary to await the next copying cycle of operation of the copying machine.

It has been indicated briefly above that the present invention has applicability to a book-type copying machine as well as to a sheet-type machine. In the specific embodiment of the copying machine described above and shown in the accompanying drawings, it will now be recognized that the switch **190** may be replaced by a manually operable "start" switch which is actuated after a book or any flat document has been placed in position on the illuminating component of the machine. This may be a stationary transparent platform beneath which a traveling light source scans the book or document, or the platform may travel back and forth relative to a stationary light source, both of which arrangements are well known in the art.

When the equivalent "start" switch **190** is actuated manually, the same sequence of operation of the copy paper feeding mechanism takes place as fuly described above, with the exception that it is now necessary to have the switch **194** in the copy paper path to keep the solenoid **146** energized for the proper length of time since the "start" switch would be only momentarily closed to energize the solenoid **146** and cause the feed rollers **82** and **84** to feed the sheet far enough to close the switch **194**. Alternatively a secondary control for the solenoid **146** may be associated with the mechanical movement either of the document platform or the lamp as the case may be.

It is now apparent from the foregoing that there has been provided a combined copy-paper pre-feed and timing mechanism for copying machines which avoids the disadvantages of prior art copying machines and which achieves the foregoing objects. It is to be understood that the present invention is not intended to be limited to the specific embodiment described above and shown in the accompanying drawings, which is merely illustrative of the principles of the invention and is the best mode presently contemplated for carrying out the invention, and is susceptible to change in form, size, detail and arrangement of parts, the invention being intended to cover all such equivalents, variations and modifications thereof as may be deemed to be within the scope of the claims appended hereto.

I claim:

1. In a copying machine having storage means for a stack of sheets of copy paper, guiding and transporting means defining a path of travel for sheets of copy paper having an infeed end adjacent said storage means and extending through the copying machine, means for continuously driving said transporting means, and means defining an exposure zone spaced along said path of travel in which a sheet of copy paper is exposed to an image of indicia on an original document, the combination therewith of a mechanism for successively feeding sheets of copy paper from said storage means to said guiding and transporting means, said mechanism comprising

(A) first feeding means disposed adjacent said storage means for feeding the topmost sheet from said stack into said infeed end of said guiding means,

(B) second feeding means spaced along said path of travel intermediate said infeed end thereof and said exposure zone, said second feeding means defining an advanced position for the leading edge of a sheet of copy paper,

(C) clutch means for alternately connecting said driving means to said first and second feeding means and being operative to connect said driving means to said second feeding means at the beginning of a copying cycle of operation of the copying machine and to said first feeding means after the trailing edge of a sheet has passed said second feeding means, and

(D) means operatively associated with said clutch means and said first feeding means for limiting the operation of said first feeding means, while said clutch means is operative to connect said driving means to said first feeding means, to feed a sheet of paper from said storage means substantially only a distance sufficient to bring the leading edge of said sheet into operative engagement with said second feeding means whereby said sheet is moved from said storage means to said advanced position preparatory to a subsequent copying cycle of operation of the copying machine.

2. A combination according to claim 1 wherein said means limiting the operation of said first feeding means comprises an intermittently operable drive transfer element coacting between said clutch means and said first feeding means and having means for automatically disengaging said driving means from said first feeding means without disengaging said clutch means from said drive transfer element when the leading edge of said sheet has been moved to said advanced position.

3. A combination according to claim 2 wherein said means for limiting the operation of said first feeding means further comprises a yieldable means operable upon disengagement of said clutch means from said drive transfer element to move said drive transfer element to a position where said driving means is reengaged with said first feeding means upon reengagement of said clutch means with said drive transfer element whereby said first feeding means is operated sbsequent to said second feeding means during a cycle of operation of said copying machine.

4. A combination according to claim 2 wherein said first feeding means includes one way drive means coacting with said drive transfer element whereby said second feeding means can withdraw the remainder of a sheet of paper from said storage means without altering the position of said drive transfer element.

5. In a copying machine having storage means for a stack of sheets of copy paper, guiding and transporting means defining a path of travel for sheets of copy paper having an infeed end adjacent said storage means and extending through the copying machine, means for continuously driving said transporting means, and means defining an exposure zone spaced along said path of travel in which a sheet of copy paper is exposed to an image of indicia on an original document, the combination therewith of a mechanism for successively feeding sheets of copy paper from said storage means to said guiding and transporting means, said mechanism comprising

(A) first feeding means disposed adjacent said storage means for feeding the topmost sheet from said stack into said infeed end of said guiding means,

(B) second feeding means spaced along said path of travel intermediate said infeed end thereof and said exposure zone, said second feeding means defining an advanced position for the leading edge of a sheet of copy paper,

(C) control means in said copying machine for initiating a copying cycle of operation and for sensing when the trailing edge of a sheet of copy paper has passed said second feeding means,

(D) clutch means responsive to said control means for alternately connecting said driving means to said first and second feeding means, said clutch means being responsive to operation of said control means when initiating a copying cycle of operation to connect said driving means to said second feeding means and being responsive to operation of said control means when sensing the movement of the trailing edge of a sheet past said second feeding means to connect said driving means to said first feeding means, and

(E) means operatively associated with said clutch means and said first feeding means for limiting the operation of said first feeding means, while said clutch means is operative to connect said driving means to said first feeding means, to feed a sheet of paper from said storage means substantially only a distance sufficient to bring the leading edge of said sheet into operative engagement with said second feeding means whereby said sheet is moved from said storage means to said advanced position preparatory to a subsequent copying cycle of operation of the copying machine.

6. A combination according to claim 5 wherein said means limiting the operation of said first feeding means comprises an intermittently operable drive transfer element coacting between said clutch means and said first feeding means and having means for automatically disengaging said driving means from said first feeding means independently of operation of said control means when the leading edge of said sheet has been moved to said advanced position.

7. A combination according to claim 6 wherein said drive transfer element comprises a one revolution rotary drive member engaged between said clutch means and said first feeding means, said drive member having means for effecting a driving engagement between said clutch means and said first feeding means disposed over only a major portion of the periphery of said drive member and having a minor portion of said periphery formed to interrupt said driving engagement.

8. A combination according to claim 7 wherein said drive member is a gear having circumferential teeth which mesh with the teeth of a gear defining the output of said clutch means and another gear connected to said first feeding means, said drive member gear having an arcuate recess in the teeth thereof which extends axially over a portion of the length of said teeth, the teeth of said clutch output gear being no longer than the depth of said recess in said drive member gear and being aligned with

said recess whereby said clutch output gear stops driving said drive member gear when said recess registers with said clutch output gear.

9. A combination according to claim 8 wherein said drive member gear includes stop means adapted to engage a poriton of said clutch means when the latter is engaged with said drive member gear, said stop means being spaced in relation to said recess to positively arrest movement of said drive member gear when said recess registers with said clutch output gear.

10. A combination according to claim 6 wherein said means for limiting the operation of said first feeding means further comprises a spring loaded actuator operable in response to operation of said control means when initiating a cycle of operation of the copying machine to move said drive transfer element to a position where said driving means is reengaged with said first feeding means when said control means operates upon sensing the movement of the trailing edge of the sheet of copy paper past said second feeding means whereby said first feeding means is operated subsequent to said second feeding means during a copying cycle of operation of said copying machine.

11. A combination according to claim 10 wherein said drive transfer element comprises a one revolution rotary drive member engaged between said clutch means and said first feeding means, said drive member having means for effecting a driving engagement between said clutch means disposed over only a major portion of the periphery of said drive member and having a minor portion of said periphery formed to interrupt said driving engagement, said drive member further having cam means cooperating with said spring loaded actuator for moving said drive member only a distance sufficient to dispose said minor portion of the periphery of said drive member out of operative association with said clutch means.

12. A combination according to claim 11 wherein said drive member is a gear having circumferential teeth which mesh with the teeth of a gear defining the output of said clutch means and another gear connected to said first feeding means, said drive member gear having an arcuate recess in the teeth thereof which extends axially over a portion of the length of said teeth, the teeth of said clutch output gear being no longer than the depth of said recess in said drive member gear and being aligned with said recess, said cam means having a portion aligned with said recess for moving said gear to a position where said recess is disposed away from said clutch output gear whereby said clutch output gear stops driving said drive member gear when said recess registers with said clutch output gear and said recess is moved out of registration with said clutch output gear when said clutch means is again engaged with said second feeding means.

13. A combination according to claim 12 wherein said drive member gear includes stop means adapted to engage a portion of said clutch means when the latter is engaged with said drive member gear, said stop means being spaced in relation to said recess and to said portion of said cam means aligned with said recess to positively arrest movement of said drive member gear when said recess registers with said clutch output gear and to prevent said spring loaded actuator from moving said drive member gear while said clutch output gear is engaged with said recess of said drive member gear.

14. In a copying machine having storage means for a stack of sheets of copy paper, first guiding and transporting means defining a first path of travel for sheets of copy paper having an infeed end adjacent said storage means and extending through the copying machine, second guiding and transporting means defining a second path of travel for original documents through the copying machine, means for continuously driving said first and second transporting means in synchronism, and means defining an exposing zone and an illuminating zone spaced along said first and second paths of travel respectively in which a sheet of copy paper is exposed to an image of indicia on an original document, the combination therewith of a mechanism for successively feeding sheets of copy paper from said storage means to said first guiding and transporting means, said mechanism comprising

(A) first feeding means disposed adjacent said storage means for feeding the topmost sheet from said stack into said infeed end of said first guiding means,

(B) second feeding means spaced along said first path of travel intermediate said infeed end thereof and said exposure zone, said second feeding means defining an advanced position for the leading edge of a sheet of copy paper.

(C) control means including sensing means located in said second path of travel and spaced from said illuminating zone a distance substantially equal to the distance between said second feeding means and said exposure zone in said first path of travel, said sensing means being operative to sense the leading edge of a document to actuate said control means to initiate a copying cycle of operation of the copying machine and operative to sense the passage of the trailing edge of the document,

(D) clutch means responsive to said control means for alternately connecting said driving means to said first and second feeding means, said clutch means being responsive to operation of said control means upon sensing the leading edge of a document to connect said driving means to said second feeding means and being responsive to operation of said control means upon sensing the trailing edge of a document to connect said driving means to said first feeding means, and

(E) means operative associated with said clutch means and said first feeding means for limiting the operation of said first feeding means, while said clutch means is operative to connect said driving means to said first feeding means, to feed a sheet of paper from said storage means substantially only a distance sufficient to bring the leading edge of said sheet into operative engagement with said second feeding means whereby said sheet is moved from said storage means to said advanced position preparatory to a subsequent copying cycle of operation of the copying machine.

15. A combination according ot claim 14 wherein said control means includes additional sensing means located in said first path of travel adjacent said second feeding means and operative to sense the passage of the trailing edge of a sheet of copy paper past said second feeding means, both said sensing means being operatively connected in said control means to cause the latter to maintain said clutch means engaged with said second feeding means until the trailing edge of both the document and the copy paper sheet have passed the sensing means located in their respective paths of travel.

16. In a copying machine having a storage means for a stack of sheets of copy paper, guiding and transporting means defining a path of travel for sheets of copy paper having an infeed end adjacent said storage means and extending through the copying machine and having an exposure zone spaced therealong from said storage means, means for continuously driving said transporting means and means including a source of illumination for projecting at image of indicia on an original document to said exposing zone while a sheet of copy paper is passing therethrough, the combination therewith of a mechanism for successively feeding sheets of paper from said storage means to said transporting means and for controlling the energization of said illuminating means, said mechanism comprising

(A) first feeding means disposed adjacent said storage means for feeding the topmost sheet from said stack into said infeed end of said guiding means,

(B) second feeding means spaced along said path of

travel intermediate said infeed end thereof and said exposure zone, said second feeding means defining an advanced position for the leading edge of a sheet of copy paper,

(C) control means in said copying machine for initiating a copying cycle of operation and for sensing when the trailing edge of a sheet of copy paper has passed said second feeding means,

(D) clutch means responsive to said control means for alternately connecting said driving means to said first and second feeding means, said clutch means being responsive to operation of said control means when initiating a copying cycle of operation to connect said driving means to said second feeding means and being responsive to operation of said control means when sensing the passage of the trailing edge of a sheet past said second feeding means to connect said driving means to said first feeding means, and

(E) means operatively associated with said clutch means and said first feeding means for sequentially energizing said illuminating means when said clutch means is operated by said control means to connect said driving means to said second feeding means at the initiation of a copying cycle of operation and thereafter for simultaneously limiting the operation of said first feeding means, while said clutch means is operative to connect said driving means to said first feeding means, to feed a sheet of paper from said storage means substantially only a distance sufficient to bring the leading edge of said sheet into operative engagement with said second feeding means and for deenergizing said illuminating means substantially at the completion of said operation of said first feeding means whereby said sheet is moved from said storage means to said advanced position preparatory to a subsequent copying cycle of operation of the copying machine and said illuminating means is maintained energized during said movement of said sheet.

17. A combination according to claim **16** wherein said last named means comprises a switch connected to said illuminating means, and an intermittently operable drive transfer element coacting between said clutch means and said first feeding means and having means for automatically disengaging said driving means from said first feeding means independently of said control means when the leading edge of said sheet has been moved to said advanced position, said drive element also having means for closing said switch to energize said illuminating means when said clutch means is engaged with said second feeding means and for opening said switch to deenergize said illuminating means when said drive element disengages said driving means from said first feeding means.

18. A combination according to claim **17** wherein said last named means further comprises a spring loaded actuator operable in response to operation of said control means when initiating a copying cycle of operation of the copying machine to move said drive transfer element to a position where said driving means is reengaged with said first feeding means when said control means is operated upon sensing the movement of the trailing edge of a sheet of copy paper past said second feeding means, said drive transfer element including abutment means operatively associated with said switch for closing said switch upon movement of said drive transfer element by said spring loaded actuator and for opening said switch at the completion of operation of said drive transfer element when said first feeding means is disengaged from said clutch means by said drive transfer element.

19. A sheet feeding mechanism for successively prefeeding sheets of paper from a supply stack to an advanced position and beyond comprising

(A) supply means for a stack of sheets of paper disposed at a first location,

(B) first feeding means operable to feed the topmost sheet from said stack,

(C) second feeding means disposed at a second location spaced from said first feeding means and adapted to receive a sheet from said first feeding means and to feed said sheet through said second feeding means,

(D) intermittently operable driving means connected to said first feeding means and operable when actuated to operate said first feeding to feed a sheet from said first location substantially only to said second location for operative engagement with the leading edge of said sheet by said second feeding means, and

(E) continuously operating shiftable driving means for alterntely driving said first and second feeding means, said continuously operating driving means including

(1) means under manual control for initially shifting said continuously operating driving means into engagement with said second feeding means,

(2) sensing means for sensing when the trailing edge of a sheet has passed said second feeding means, and

(3) means responsive to operation of said sensing means by the trailing edge of said sheet for shifting said continuously operating driving means from said second feeding means into driving engagement with said intermittently operable driving means,

whereby a subsequent sheet is fed from said first location to said second location immediately upon a preceding sheet being fed beyond said second location.

20. A mechanism according to claim **19** wherein said intermittently operable driving means comprises a drive transfer element having means for discontinuing driving operation of said drive transfer element after a predetermined amount of operation thereof and while said continuously operating driving means is engaged with said drive transfer element, and yieldable means responsive to operation of said manual control for resetting said drive transfer element to a position where said continuously operating driving means is drivingly engaged with said drive transfer element when said continuously operating driving means is shifted in response to operation of said sensing means by the trailing edge of a sheet.

21. A mechanism as set forth in claim **20** wherein said drive transfer element comprises a gear having circumferential teeth which mesh with the teeth of a second gear which is part of said continuously operating driving means and with a third gear connected to said first feeding means, an arcuate portion of the teeth of said drive transfer gear being cut away over a portion of the axial length of said gear to define a recess, said second gear being in alignment only with the recessed portion of said drive transfer gear whereby said drive transfer gear stops operating when said recess therein registers with said second gear.

22. A mechanism according to claim **21** wherein said gear includes cam means cooperating with said yieldable means for moving said gear a distance sufficient to move said recess away from a position of registration with said second gear when said second gear is shifted to said second feeding means in response to said manual control.

References Cited

UNITED STATES PATENTS

3,137,495	6/1964	Eichorn	271—6
3,152,532	10/1964	Limberger	355—107

EVON C. BLUNK, Primary Examiner

D. D. WATTS, Assistant Examiner