March 11, 1952 J. F. MORSE 2,588,650

MARINE ENGINE CONTROL

Filed Feb. 24, 1949 3 Sheets-Sheet 1

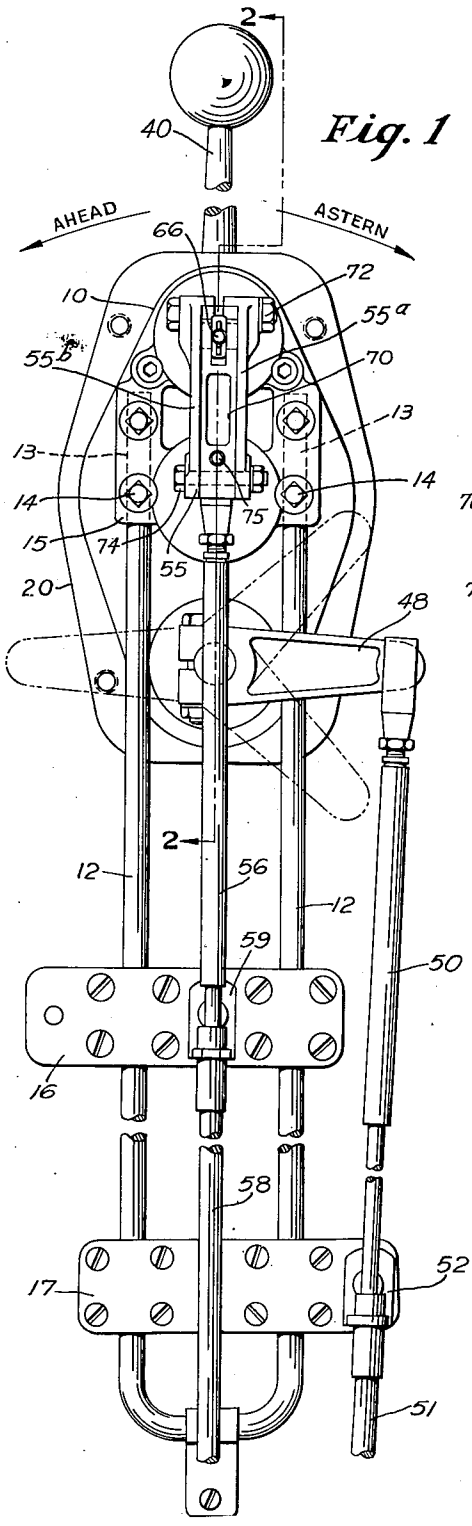

Fig. 1

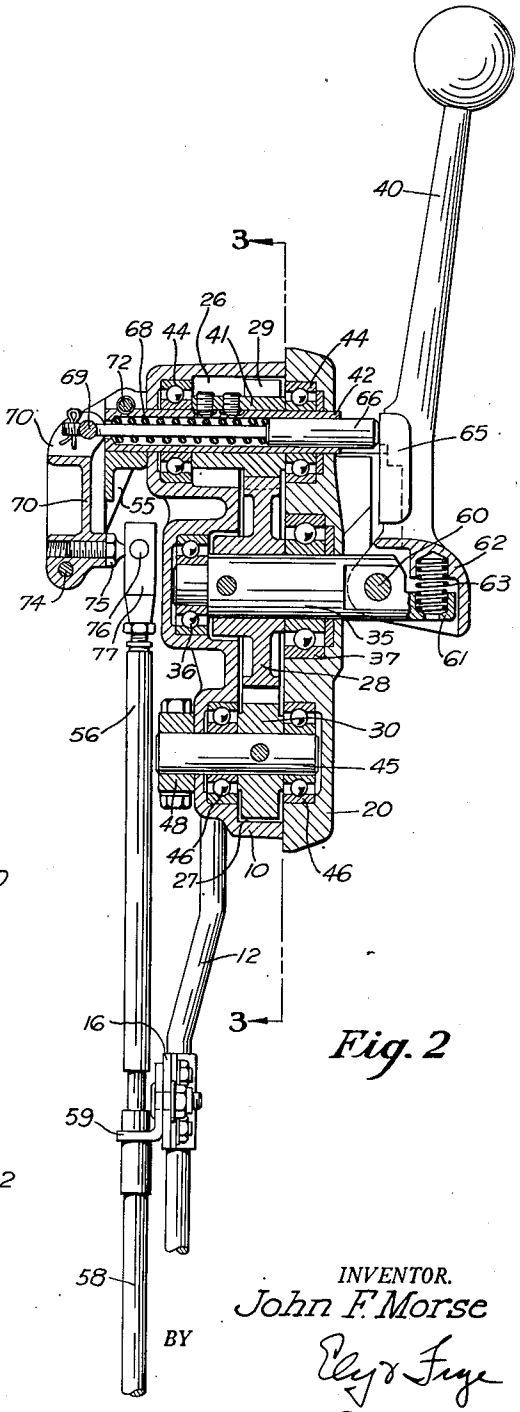

Fig. 2

INVENTOR.
John F. Morse
BY
Clyde Fuge
Attorneys

March 11, 1952 J. F. MORSE 2,588,650

MARINE ENGINE CONTROL

Filed Feb. 24, 1949 3 Sheets-Sheet 2

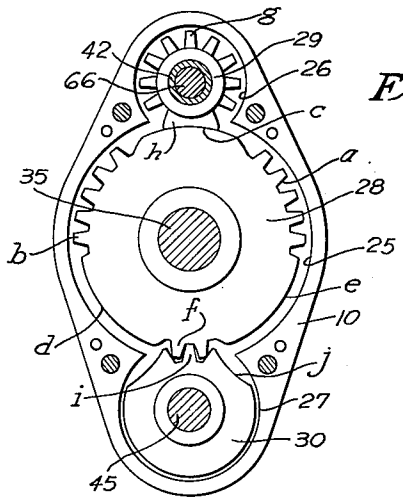

Fig. 3

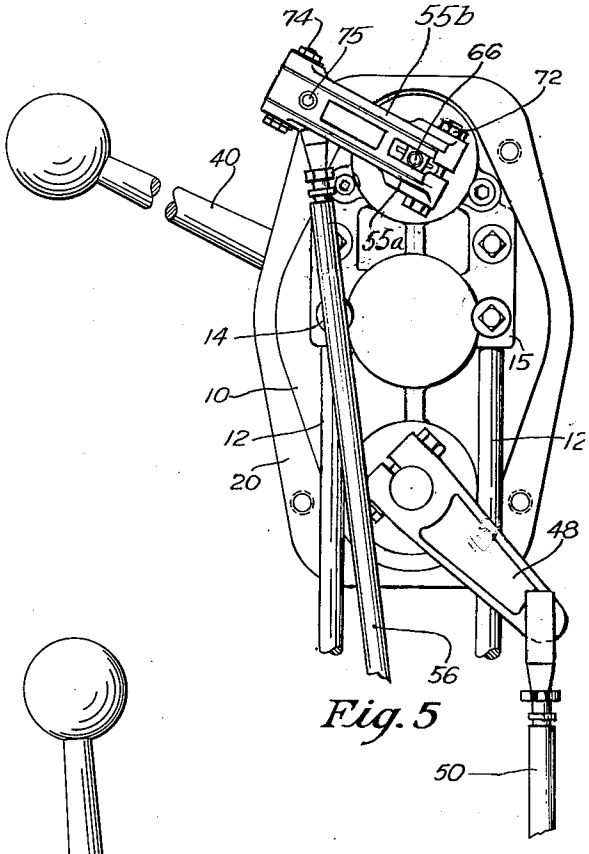

Fig. 5

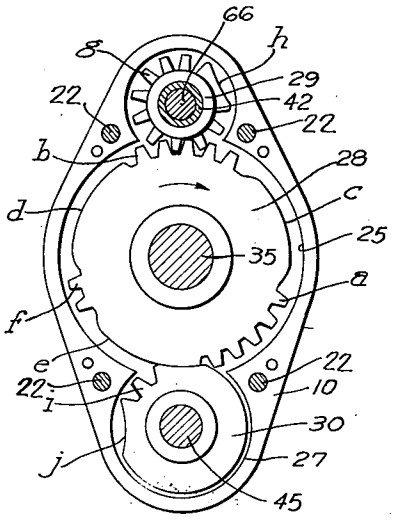

Fig. 4

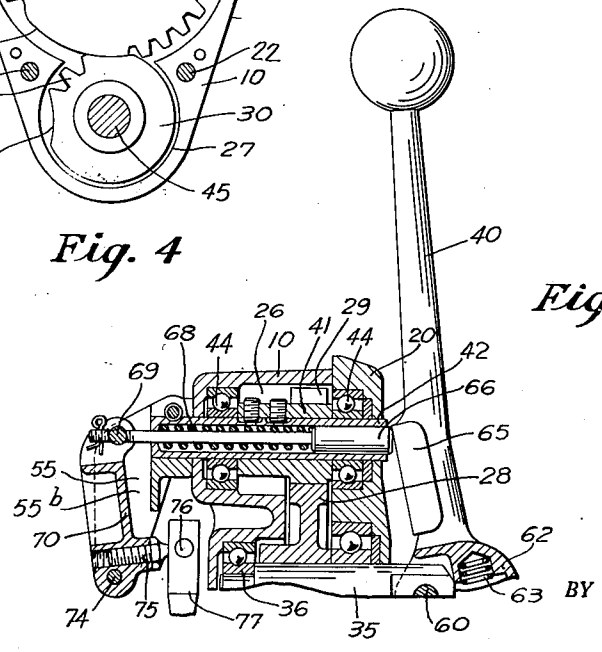

Fig. 6

INVENTOR.
John F. Morse
BY
Ely & Frye
Attorneys

March 11, 1952 J. F. MORSE 2,588,650

MARINE ENGINE CONTROL

Filed Feb. 24, 1949 3 Sheets-Sheet 3

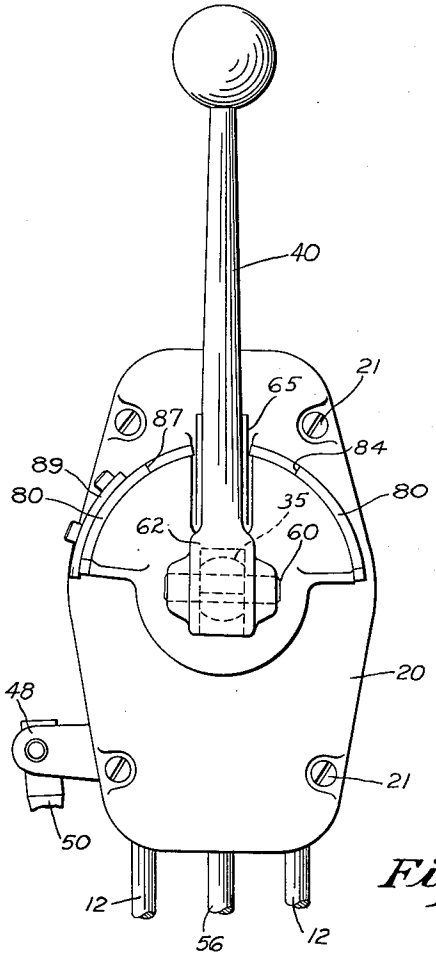

Fig. 7

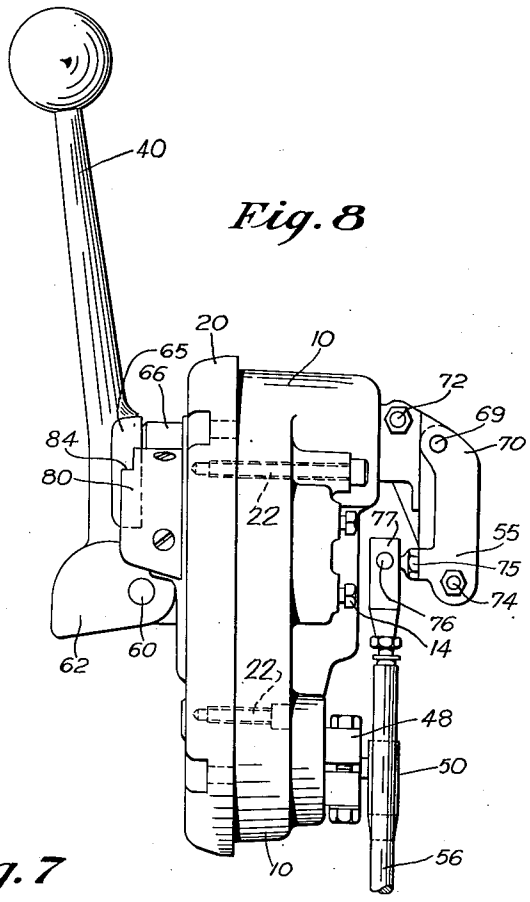

Fig. 8

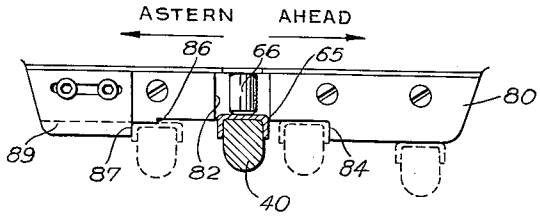

Fig. 9

INVENTOR.
John F. Morse
BY
Clay & Fryer
Attorneys

Patented Mar. 11, 1952

2,588,650

UNITED STATES PATENT OFFICE

2,588,650

MARINE ENGINE CONTROL

John F. Morse, Hudson, Ohio

Application February 24, 1949, Serial No. 78,029

11 Claims. (Cl. 192—.098)

1

The present invention relates to the improvement of control mechanisms especially designed for marine engines, although it is not necessarily limited to this particular case and may be employed whenever conditions and requirements are similar to those encountered in the operation and control of marine engines.

The purpose of the invention is to devise and perfect a control mechanism by which the pilot may, with the manipulation of a single lever, operate the clutch and gear shifting devices on the engine and the throttle by which the speed of the engine is controlled. The device is so constructed and arranged that these operations may be carried out without danger of stalling or "blasting" the engine in going from forward to reverse or from reverse to forward. This property is particularly desirable in maneuvering the craft in emergencies where it may be necessary to reverse the engine suddenly to avoid collision. It is also an object of the invention to provide a mechanism of this type which will protect both the engine and the clutch by timing the operation of the clutch and the throttle automatically.

The device shown and described herein is particularly adapted for use with marine engine installations which employ hydraulic shifting devices and is in the nature of an improvement of the device shown in my prior application Serial No. 15,546, filed March 18, 1948.

By the use of the improved control mechanism shown and described herein, the operation of marine engines is simplified and accidents which arise either from inexperience or from sudden action are prevented. Incorporating the control device in a single lever permits the pilot to maneuver the boat while still maintaining control of the power plant. The invention further provides for regulation of the engine at the speeds requisite for the most efficient operation of the boat. The mechanism has been greatly simplified over prior devices for like purposes.

The best known and preferred embodiment of the invention is shown and described, but this is not to be understood as limiting or confining the practice of the invention to devices which are like in every respect to the one shown herein because modifications and improvements may be made which do not depart from the invention as set forth in the appended claims.

In the drawings:

Fig. 1 is an elevation looking at the rear of the device, the parts at this time being in neutral.

Fig. 2 is a view taken at right angles to Fig. 1, the control box or unit being shown in section on the line 2—2 of Fig. 1.

2

Fig. 3 is a view looking at the gearing which operates the control levers for the clutch and throttle, the view being taken on the line 3—3 of Fig. 2.

Fig. 4 is a similar view, but showing the position of the operating gears when the throttle is fully opened.

Fig. 5 is a view similar to Fig. 1, but showing the throttle lever at fully open position ahead.

Fig. 6 is a view similar to Fig. 2, but showing the manner in which the throttle lever operates to control the speed of the engine in neutral.

Fig. 7 is a view looking at the front of the device.

Fig. 8 is a side view thereof.

Fig. 9 is a developed view of the rack or plate which provides the stops for the several positions of the throttle lever.

The mechanism shown herein is simple and compact, being housed in a main casing or housing 10 which is supported in convenient position for the pilot on the bulkhead or a control pedestal (not shown) by means such as the screws 21 set at points around the perimeter of the housing. At the rear of the housing is a U-shaped bracket 12, the arms of which are received in vertical bores 13 formed in bosses 15 on the rear of the housing and held therein by set screws 14.

The front of the housing is closed by a face plate 20 which is secured in place by bolts 22 threaded into the housing. The housing and face plate are approximately oval in form, and the housing is formed on its side adjacent the face plate with a large circular recess 25 above and communicating with which is a smaller circular recess 26, and below and likewise communicating therewith is a second smaller circular recess 27. In these three recesses are located, respectively, the master or main operating gear 28, the gear 29 for operating the throttle and the gear 30 for operating the clutch and gear shifting mechanisms (not shown). The clutch and gear shifting mechanism is usually hydraulically operated by any of the well known types of servo motors now in common use for the purpose.

Referring particularly to Figs. 3 and 4, it will be seen that each of the said operating gears is an interrupted or mutilated gear and each is provided with smooth mating peripheral portions which serve to hold the gears 29 and 30 in their idle positions. Thus the master gear 28 has two arcuate sets of teeth *a* and *b* on either side of a smooth segment *c*, and smooth segments *d* and *e* on either side of a shorter tooth portion *f* located opposite the segment *c*. The toothed portions *a* and *b* are designed to op-

erate the gear 29 and the toothed portion *f* to operate the gear 30.

The gear 29 is toothed over the major portion of its periphery, as indicated at *g* so as to be engaged and driven by the gear segments *a* or *b*, depending upon whether the engine is in forward or reverse. The gap in the toothed periphery of the gear 29 is supplied with a smooth, concave arc segment *h* adapted to ride upon the portion *c* of the gear 28 when the engine is in neutral, and during the range from idling forward to idling in reverse.

The gear 30 is provided with a short toothed segment *i* to mesh with the segment *f* on the main gear 28. On either side of the segment *i*, the gear 30 is provided with smooth, concave surfaces *j* adapted to ride on the surface *d* or *e* of the gear 28, depending upon whether the engine is in forward or reverse.

When the engine is in neutral as shown in Fig. 3, the gears 28 and 30 are meshed, but the gear 29 is immovable because of the engagement of the surfaces *c* and *h*. If the gear 28 is rotated clockwise as shown in Fig. 4, which is ahead as the drawings show, the first operation is to rotate the gear 30 to the position shown in Fig. 4 which, by the mechanism to be described, operates the clutch and puts the engine in forward. The operation takes up only a portion of the movement of the gear 28, and thereafter the gear 30 is held in position as shown in Fig. 4.

At the moment that the gear 30 is thrown to its position on either side of neutral, the segments *a* or *b*, as the case may be, engage the teeth on the gear 29 and the gear is now rotated to open the throttle. The arcuate movement of the gear 28 is positively arrested in either direction by the contact of the forward tooth of segment *a* or *b* with the smooth face of the gear 30.

In going from full forward to reverse, the master gear 28 first rotates the gear 29 to close the throttle and while the gear 29 is held in closed position of the throttle, the continued movement of the master gear now picks up the gear 30 by engagement of the toothed segments *f* and *i*. If the pilot wishes to go into reverse immediately, he continues the movement of the throttle lever and the gear 30 is shifted into reverse, and the throttle is opened immediately thereafter.

It will be seen that the pilot may thus throw his engine from forward to reverse, or reverse to forward, by a single movement of the throttle lever and the engine will be slowed down before the clutch is disengaged and accelerated after the clutch is reengaged. The gears give a regular progression in the opening and closing movements and not an uneven progression as is obtained by the regular Genera type gearing.

The master gear 28 is fixed to an operating shaft 35 mounted in roller bearings 36 and 37 set in recesses in the housing 10 and in the face plate 20. On the projecting outer end of this shaft is mounted the throttle lever or operating arm 40 to which reference has been made. The gear 29 is provided with a long shank 41 which is secured to a sleeve 42 which is rotatable in bearings 44 mounted in recesses in the housing 10 and the face plate 20. The gear 30 is secured to a shaft 45 mounted in bearings 46 in the housing and the face plate. The rear of this shaft projects through the housing and about the shaft is clamped the lever arm 48 which is pivotally connected at its outer end to a rod 50 which is connected to the cable 51 that extends to the clutch control and operating device. Conveniently the assembly of the rod 50 and the cable 51 may be connected to a rocking clip 52 located on a plate 17 fixed to the bracket 12.

The sleeve 42 referred to above extends to the rear of the housing, and on the end of this sleeve is clamped a lever arm, indicated as a whole by the numeral 55, which is connected to a rod 56, the lower end of which is, in turn, connected to a cable 58 leading to the engine throttle. The assembly of the rod 56 and cable 58 may be connected to a rocking clip 59 located on a plate 16 on the bracket 12.

It will thus be seen that, when the throttle lever is in vertical position, the engine is in neutral and the throttle closed to its idle running position, but that when the lever is rocked to the right or left in a plane parallel to the housing, the clutch is engaged in forward or reverse and the throttle is opened to the extent to which the lever 40 may be moved.

It is necessary to provide means for accelerating the engine while it is in neutral, such as in starting and warming up the engine. For this purpose the mechanism is designed as will now be described.

The throttle lever 40 is not rigid with the shaft 35 of the master gear, but is pivoted thereto by the pin 60 so that the lever may be rocked in a plane transverse to the plane of the housing. It is through this movement of the lever while in neutral position that the engine may be accelerated while in neutral, and it is also through this movement that the lever is manipulated in conjunction with the stop plate or control quadrant to be described.

As shown in Fig. 1, the outer end of the shaft 35 is flattened to receive the pin 60 and the lower end of the lever is forked to pass over this portion of the shaft. The shaft is also provided with a forwardly extending ledge 61 and a hood 62 on the lever surrounds this extension. A light spring 63 between the ledge 61 and the hood 62 tends to hold the lever in vertical position.

On the inner face of the lever 40 is a U-shaped bearing plate 65, the corners of which are rounded and the flat surface of which is held in light yielding contact with the outer end of a pin 66 when the lever is in vertical or neutral position.

This pin 66 is slidably mounted in the sleeve 42 which forms the axis of the gear 39. The inner or rear end of the pin is reduced and in the space thus provided in the sleeve is located the coil spring 68, the rear end of which is retained by closing in the rear end of the sleeve. The pin 66 projects beyond the main body of the lever arm 55 where it is threaded into and held by a cotter pin or the like in a cross pin 69 in the upper forked end of a supplemental lever arm 70.

The lever arm 55 is made in two parallel sections 55^a and 55^b which are clamped at their upper ends about the projecting end of the sleeve 42 by a bolt 72. The lower ends of the sections 55^a and 55^b are received and clamped over a shaft 74 on which the supplemental lever 70 is pivotally mounted. In the lower end of lever 70 is a threaded pin 75 the outer end of which is provided with a ball-shaped head 76 over which is received a socket piece 77 secured to the upper end of the rod 56.

It will be seen that as the lever 40 is moved

fore and aft to rotate the master gear 28, the rod 56 is raised and lowered to actuate the throttle by the bodily movement of the lever assembly 55. However, when the lever 40 is moved sidewise while in neutral position, the pin 66 will be moved in the sleeve 42 and this will rock the supplemental lever 70, likewise raising or lowering the rod 56. This action is illustrated in Fig. 6.

To the front of the housing and behind the throttle lever 40 is the arc-shaped plate 80 which provides the several stops for the movement of the throttle lever. A developed view of this plate or control quadrant forms Fig. 9. At its midway portion the plate is broken out to provide a guide 82 into which the pin 66 projects so as to permit the movement of the lever to accelerate the engine during neutral.

To the right of the center, as viewed in Fig. 9, the plate is provided with abrupt stop 84 which will arrest the movement of the lever at what may be designated the forward idle speed which, in most engines, should be about 600 R. P. M. This is after the gear 30 has moved to its full extent and the engine is still at the same speed as in neutral. The pilot will move the lever to this point in operating the clutch before any acceleration of the motor takes place. He may then move the lever 40 sidewise over the stop 84 and by further arcuate movement regulate the speed of the engine in cruising.

On the reverse side of the quadrant a shallow stop 86 is provided which corresponds to the point 84, being the idle astern at about 600 R. P. M., at which point the throttle is in the same setting as neutral. Due to the forces exerted when the engine may be suddenly thrown into reverse to avoid a collision or the like, the engine may easily be stalled if it is not running at higher than idle speed. For this reason the stop 86 is shallow so that the lever, due to the rounded edge on plate 65, will readily ride over it and move to a second stop 87 which may be designated as high idle astern of about 900 R. P. M. This is a sufficient speed to prevent the engine from stalling when it is called upon to suddenly reverse the direction of propeller movement from rapid forward motion and is a valuable feature as it eliminates stalling of the engine when an emergency stop or reversal of the boat is called for. The stop 87 is provided for by the plate 89 on the quadrant. In the form of the invention shown in the drawings the plate 89 is adjustable along the quadrant. Higher speeds in reverse may be had by shifting the lever over the stop 87 as in forward.

It will be seen that a very simple, compact and easily operated device has been perfected by which the operation of power craft may be controlled. The device is as near foolproof as it seems possible to design. No especial skill or practice is necessary to master its operation and it will not only save the clutch, but will prevent accidents because the device responds automatically to the instinctive actions of a power boat operator confronted with a sudden emergency.

What is claimed is:

1. In a mechanism for operating the clutch and throttle of an engine comprising a set of interrupted gears, comprising a driving gear and two driven gears rotated thereby, one of said driven gears being adapted to be operatively connected to the throttle and the other driven gear being adapted to be operatively connected to the clutch, said second named gear being actuated by the driving gear during the interval that the first named gear is idle, a pivoted lever movable in two planes and connected to the driving gear to rotate it during movement in one plane, and operative connections to the throttle actuated by the movement of the lever in the other plane.

2. In a mechanism for operating the clutch and throttle of an engine comprising a master gear having its periphery formed with two toothed segments separated by a smooth segment and a third toothed segment opposite the said smooth segment, a second gear having a smooth segment and a toothed segment engageable with either of the said two toothed segments as the master gear is rotated in opposite directions and a third gear having a toothed segment engageable with the third toothed segment on the master gear, connections from the second gear for the throttle and from the third gear for the clutch, independent throttle operating means bypassing the master gear, and a single manual control operative selectively to rotate the master gear or to actuate the independent throttle operating means.

3. A mechanism as set forth in claim 2 in which the manual control is a lever pivoted on the shaft of the master gear.

4. In a control device for a marine engine as set forth, a driving gear and a driven gear meshing therewith through spaced arcs on opposite sides of a neutral arc, a crank arm carried by the driven gear, a pivoted lever on the crank arm, a throttle operating means carried by the said lever, and means to move the said lever on its pivot on the crank arm to move the throttle operating means while the crank arm and the driving gear are stationary.

5. In a control device for a marine engine as set forth, a driving gear and a driven gear meshing therewith through spaced arcs on opposite sides of a neutral arc, a crank arm carried by the driven gear, a pivoted lever on the crank arm, a throttle operating means carried by the said lever, a manually operated control arm pivoted to the shaft of the driving gear, and a pin passing through the shaft of the driven gear and connected at one end to the said pivoted lever, the other end of said pin being in register with the control arm when the driven gear is out of mesh with the driving gear.

6. In a control device for a marine engine as set forth, a driving gear and a driven gear meshing therewith through spaced arcs on opposite sides of a neutral arc, a crank arm carried by the driven gear, a pivoted lever on the crank arm, a throttle operating means carried by the said lever, a manually operated control arm for rotating the driving gear, and means actuated by the movement of the control arm while the gears are stationary to rock the pivoted lever independently of the crank arm.

7. In a control device for a marine engine as set forth, a driving gear and a driven gear meshing therewith through spaced arcs on opposite sides of a neutral arc, a crank arm carried by the driven gear, a pivoted lever on the crank arm, a throttle operating means carried by the said lever, and a control means movable in two planes and operative to rotate the driving gear while movable in one plane and to rock the pivoted lever independently of the crank arm while it is moved in the other plane.

8. In a mechanism as described in claim 4 having clutch operating means operated by the move-

ment of the driving gear while the driven gear is idle.

9. A control device for operating the clutch and the throttle of a marine engine, said device comprising a rock shaft, a transverse pivot on the rock shaft, an operating lever movable on said pivot, means connected to the rock shaft and movable thereby first to operate the clutch and place the engine either in forward or reverse and then to open the throttle, a sector over which the lever moves during the rocking movement of the shaft, said lever being located at a midway point on the sector when the engine is idling, stops located on either side of the midway point to arrest the lever and the rock shaft after the clutch has been engaged, and the operating lever being movable on the pivot to clear the stops and permit further movement of the rock shaft beyond the stops to open the throttle further, and means for operating the throttle independently of the rocking movement of the rock shaft, said last named means being located at the midway point on the sector and in the path of the lever and operated thereby as the lever moves on its pivot.

10. A control device for operating the clutch and the throttle of a marine engine, said device comprising a rock shaft, mechanism connected to the rock shaft and operable thereby first to operate the clutch to place the engine either in forward or reverse and then to open said throttle, an operating lever pivotally mounted on the rock shaft, a sector over which the lever moves during the rocking movement of the shaft, said lever being located at a midway point on the sector when the engine is idling, a stop in the path of the lever as it moves to operate the clutch to place the engine in reverse, said stop being so located as to arrest the movement of the lever when the throttle has opened sufficiently to impart speed to the engine above idling speed, said lever clearing the stop when it is rocked about the pivot on the rock shaft to permit further opening of the throttle, and means for operating the throttle independently of the rocking movement of the rock shaft, said last named means being located at the midway point on the sector and in the path of the lever and operated thereby when the lever is rocked about its pivot.

11. A control device for operating the clutch and the throttle of a marine engine, said device comprising a rock shaft, mechanism connected to the rock shaft and operable thereby first to operate the clutch to place the engine either in forward or reverse and then to open said throttle, an operating arm movably mounted on the rock shaft, a sector over which the operating arm moves during the rocking movement of the shaft, said arm being located at a midway point on the sector when the engine is idling, a stop in the path of the arm as it moves away from said midway point to operate the clutch and place the engine in reverse, said stop being so located as to arrest the movement of the operating arm after the rock shaft has operated the clutch and after the throttle has opened sufficiently to cause the engine to operate above idling speed, the movement of said operating arm on the rock shaft clearing the stop to permit movement of the operating arm beyond the stop, and means for operating the throttle independently of the rocking movement of the rock shaft, said last named means being located at the midway point on the sector and actuated by the movement of the operating arm on the rock shaft.

JOHN F. MORSE.

REFERENCES CITED

The following references are of record in the file of this patent:

UNITED STATES PATENTS

Number	Name	Date
539,154	Thomas	May 14, 1895
1,089,615	Wyman	Mar. 10, 1914
1,527,247	Boillon	Feb. 24, 1925
2,015,553	Exner	Sept. 24, 1935
2,219,601	Quartullo	Oct. 29, 1940
2,254,144	Higgins	Aug. 26, 1941
2,330,388	Scott-Paine	Sept. 28, 1943
2,368,877	Purvin	Feb. 6, 1945
2,454,485	Snell	Nov. 23, 1948
2,460,599	Rowe	Feb. 1, 1949
2,480,521	Thompson	Aug. 30, 1949

FOREIGN PATENTS

Number	Country	Date
8,514	Great Britain	1893