United States Patent [19]

Wallace

[11] **3,823,821**

[45] **July 16, 1974**

[54] **METHOD AND APPARATUS FOR PRODUCING WEIGHT CONTROLLED GROUPS OF SLICED FOOD PRODUCT**

[75] Inventor: **Gary Leonard Wallace,** Oak Lawn, Ill.

[73] Assignee: **Chemetron Corporation,** Chicago, Ill.

[22] Filed: **Sept. 28, 1972**

[21] Appl. No.: **293,146**

[52] **U.S. Cl.** ..... **209/74 R,** 209/121

[51] **Int. Cl.** **B07b 13/08**

[58] **Field of Search** ..... 209/73, 121, 74 R; 198/31 AC, 190

[56] **References Cited**

UNITED STATES PATENTS

2,334,384	11/1943	Cohen	198/31 AC
2,664,557	12/1953	Sargrove	209/121 X
2,880,847	4/1959	Kelley	198/190 X
2,938,626	5/1960	Dahms	209/121
3,190,432	6/1965	Vanderhoof	209/121 X
3,724,570	4/1973	Chenut	209/121

Primary Examiner—Allen N. Knowles

[57] **ABSTRACT**

A method and apparatus for producing weight controlled stacks of counted slices cut from an elongated mass of food product includes means for feeding the mass longitudinally along a downward feed path into a cutting path normal thereto, a rotary knife movable around the cutting path to cut slices from the mass, means below the cutting path for accumulating a selected number of the slices into a group, means positioned below the accumulating means for weighing a group of slices and producing a signal in response to the weight thereof, means for removing the group from the weighing means after the signal is produced, means for varying the rotary speed of the knife around the cutting path according to the weight signal, and means for accepting or rejecting weighed groups in response to the weight signal.

6 Claims, 18 Drawing Figures

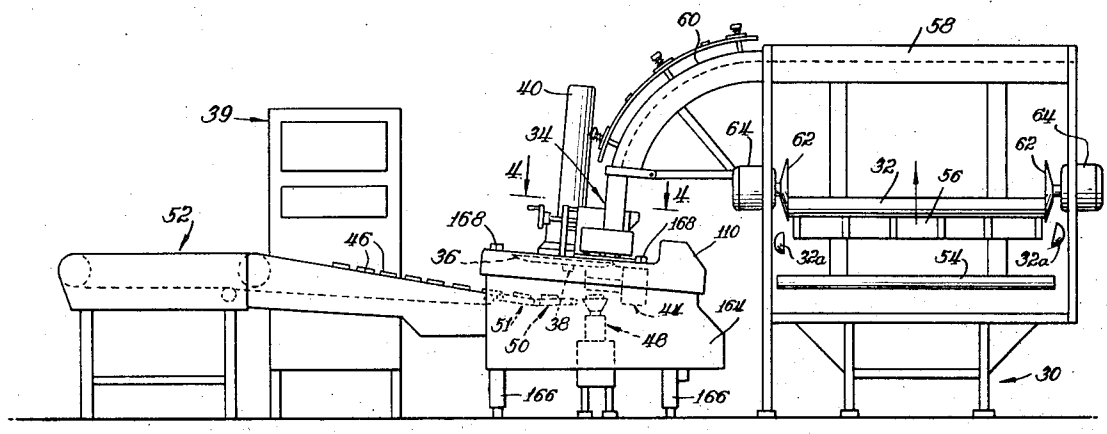

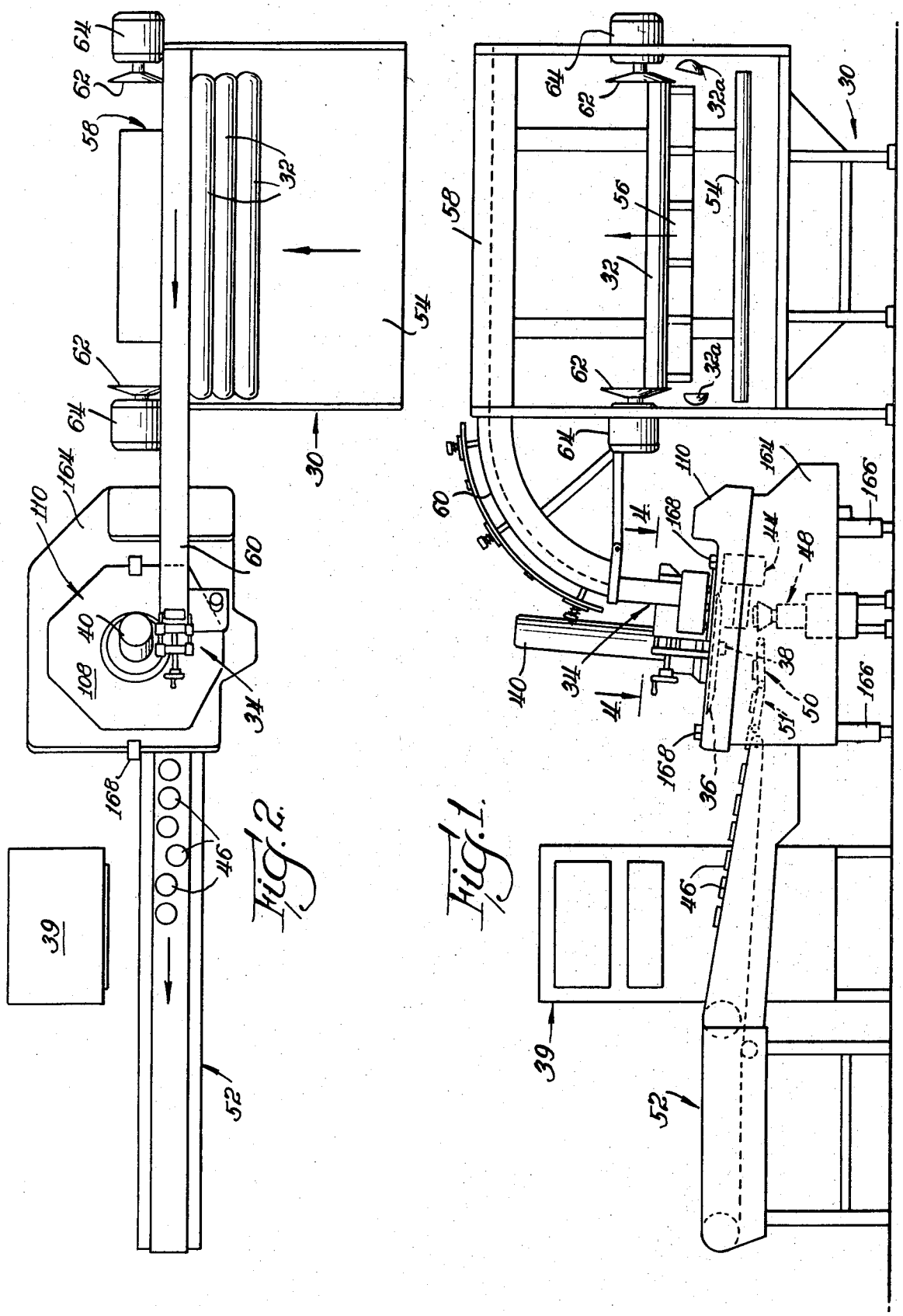
64
62
58
32
54
30
110
164
60
40
108
34
168
46
39
52
56
32a
4
44
48
38
50
51
36
166

Fig. 2.

Fig. 1.

Fig. 3.

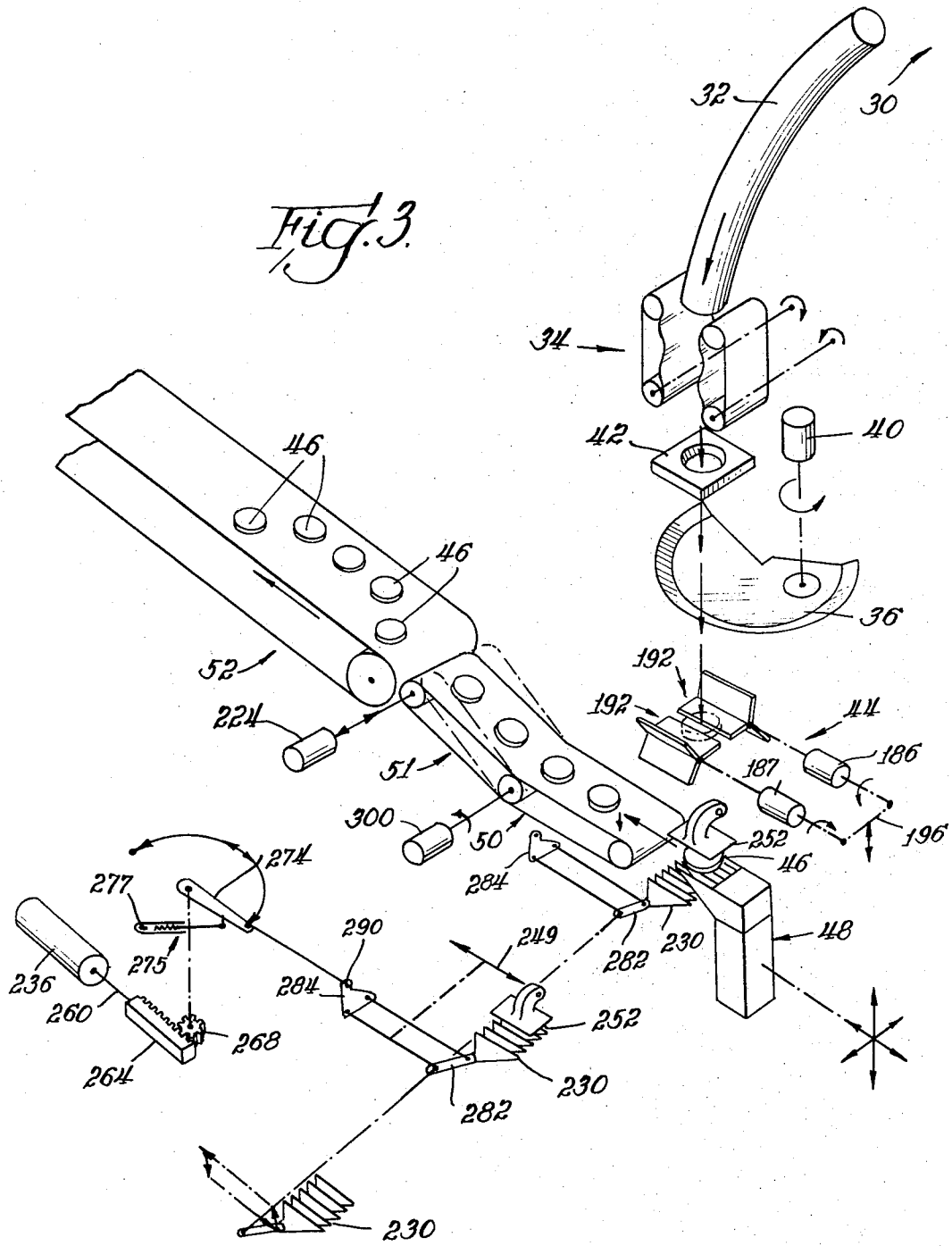
32
30
34
42
40
36
46
46
52
224
51
300
50
192
192
44
186
187
196
252
46
284
274
277
275
290
249
282
230
48
236
260
284
252
268
264
230
282
230

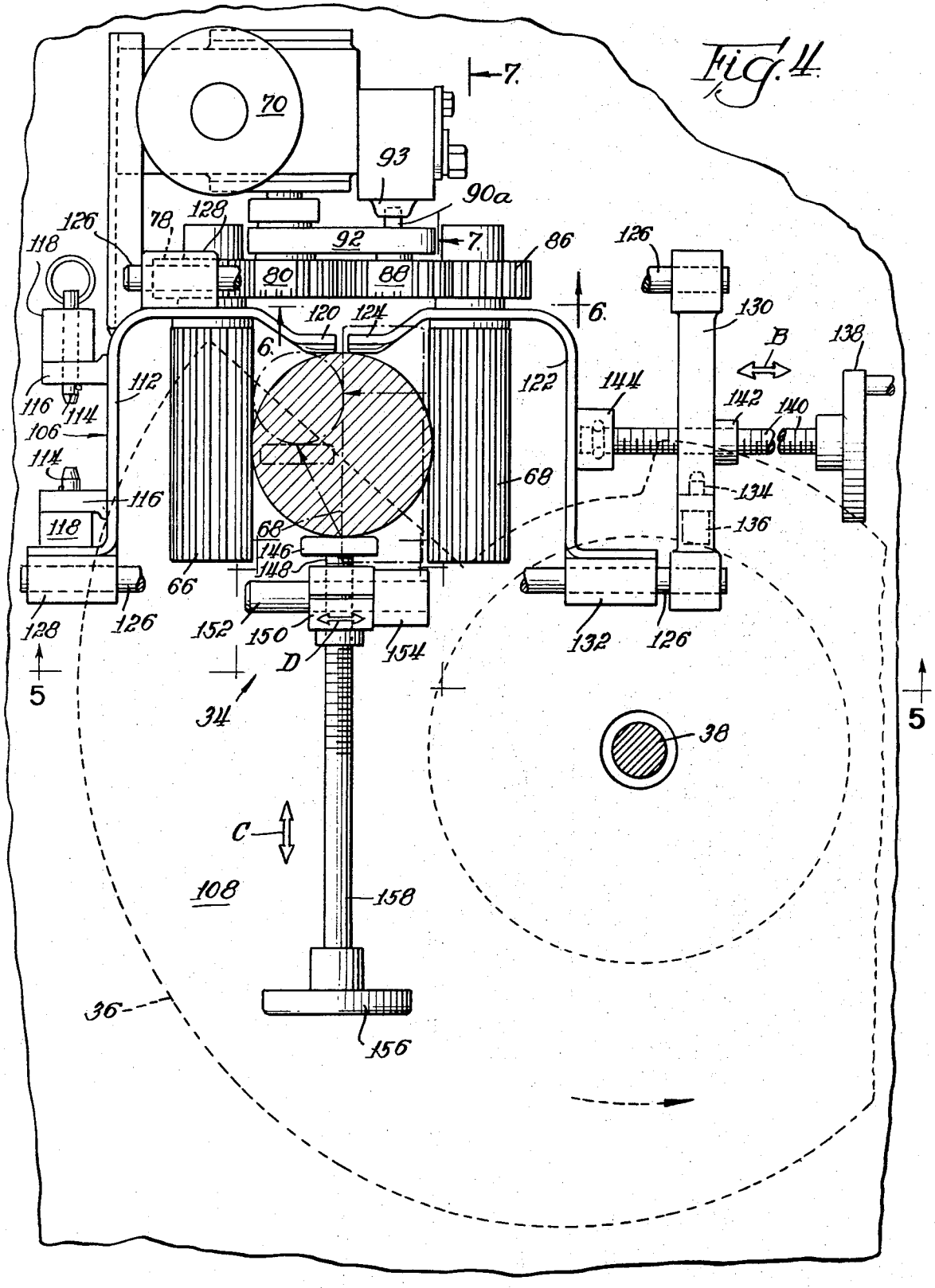
70
7
93
90a
92
7
86
126
78
128
118
80
88
120
124
6
6
130
B
138
122
144
142
140
112
116
114
106
114
116
118
68
134
136
68
146
148
66
128
126
152
150
D
154
132
126
5
34
38
5
C
108
158
36
156

Fig. 4

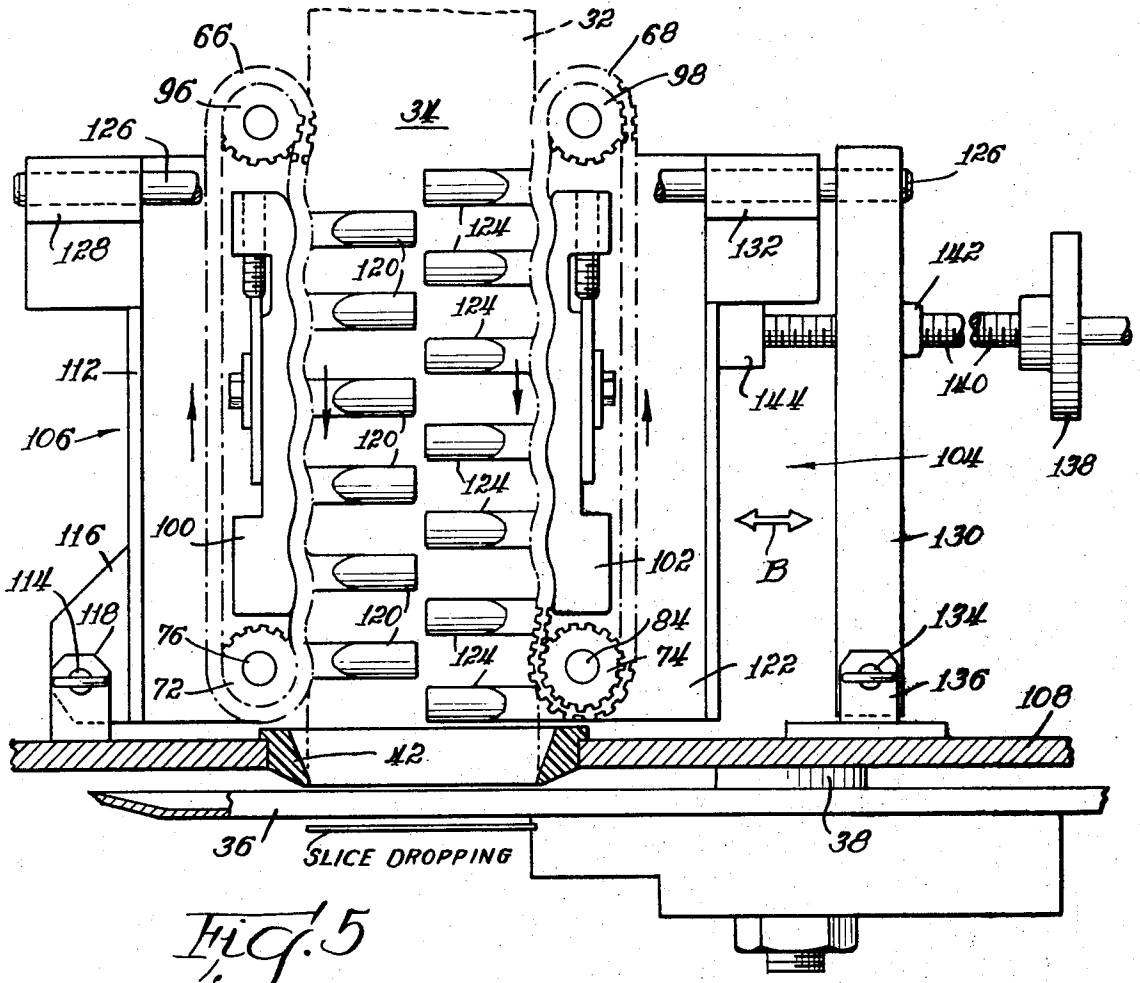

FIG. 5

FIG. 6.

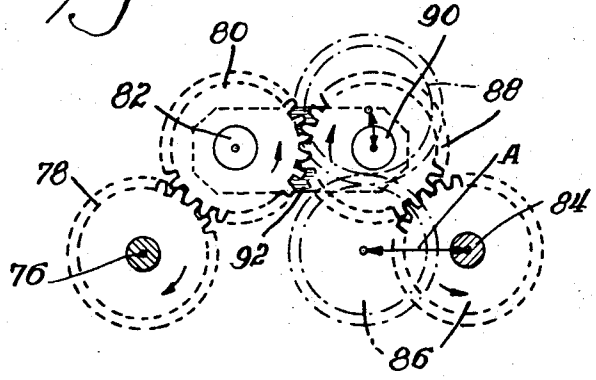

FIG. 7.

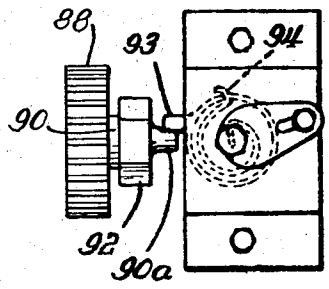

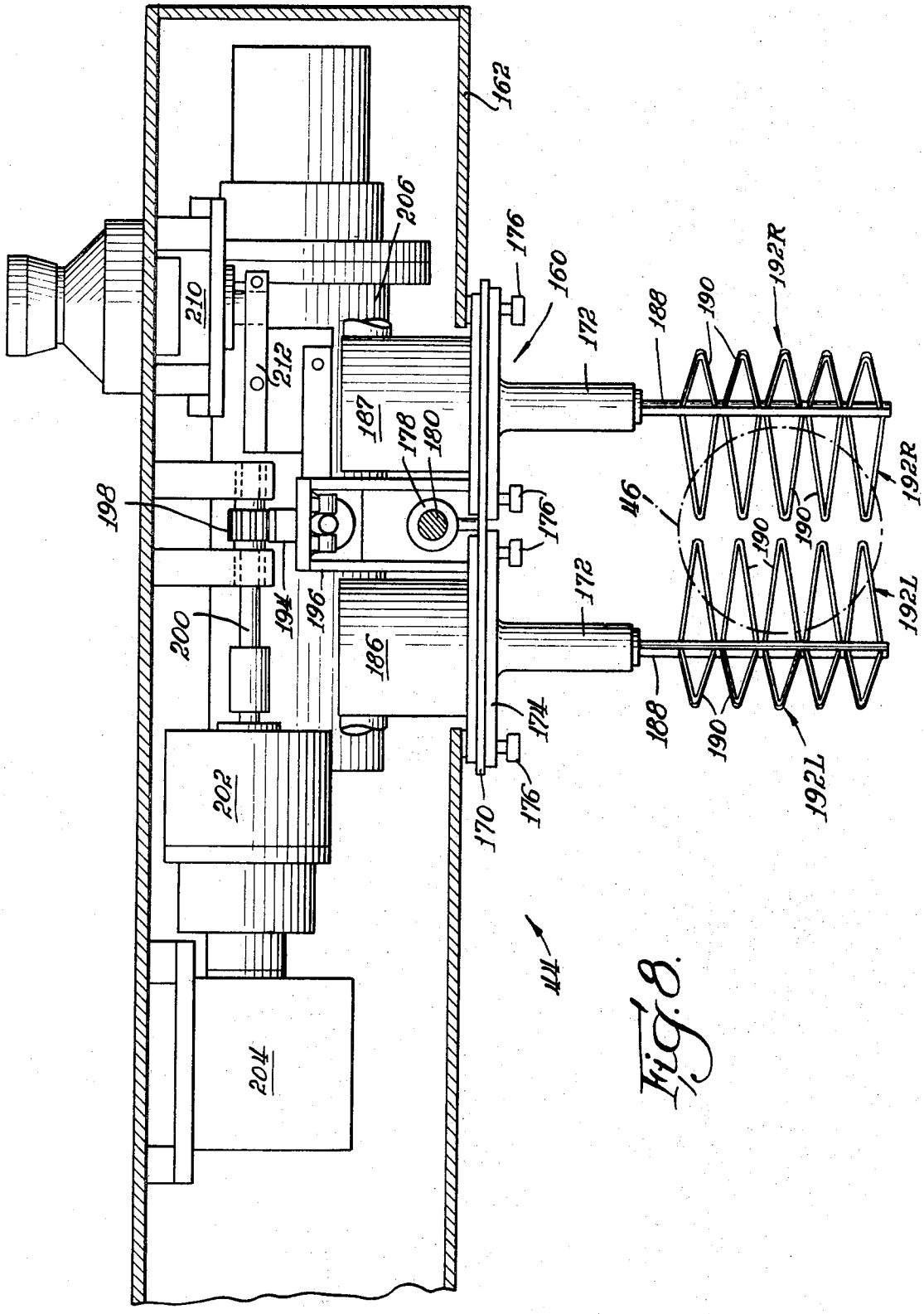
162
206
176
160
172
188
190
192R
210
212
187
178
180
198
46
194
196
200
186
174
202
170
44
204
192L

Fig. 8.

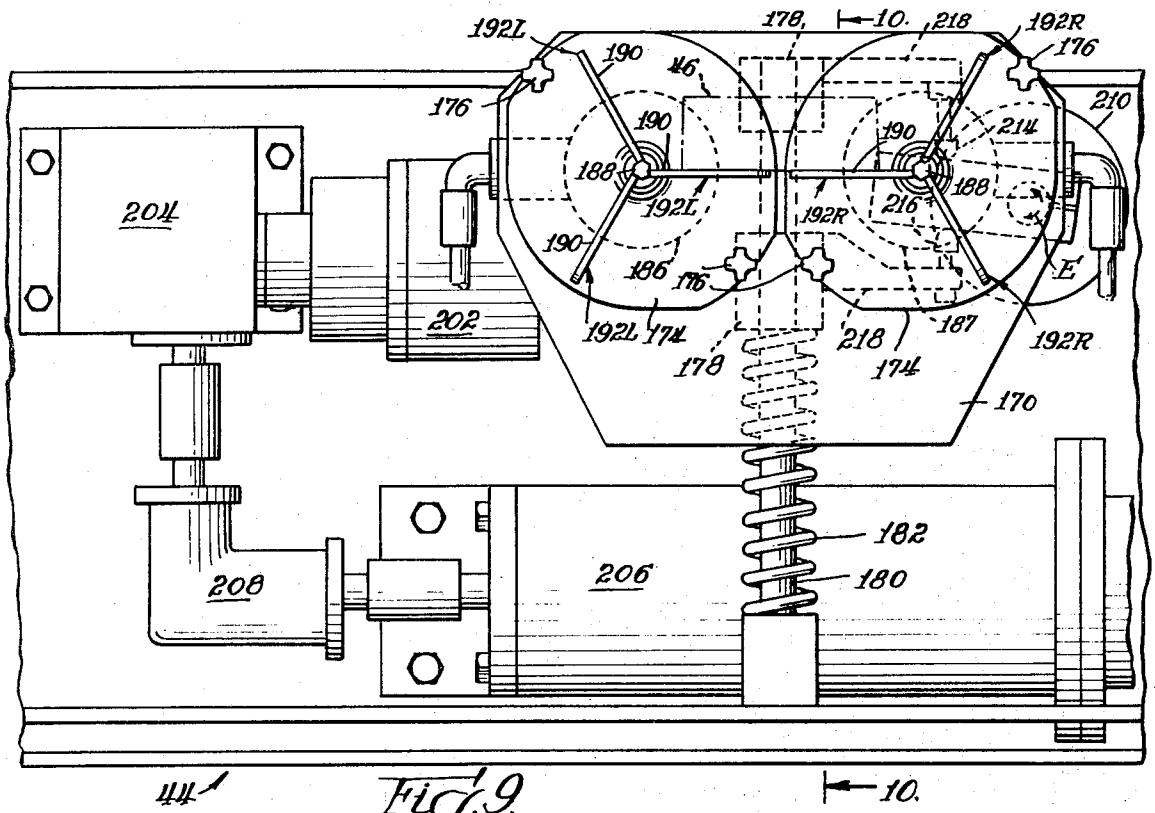
192L
190
46
178
10
218
192R
176
210
214
188
216
204
202
186
174
187
E
170
182
180
206
208
44

Fig. 9.

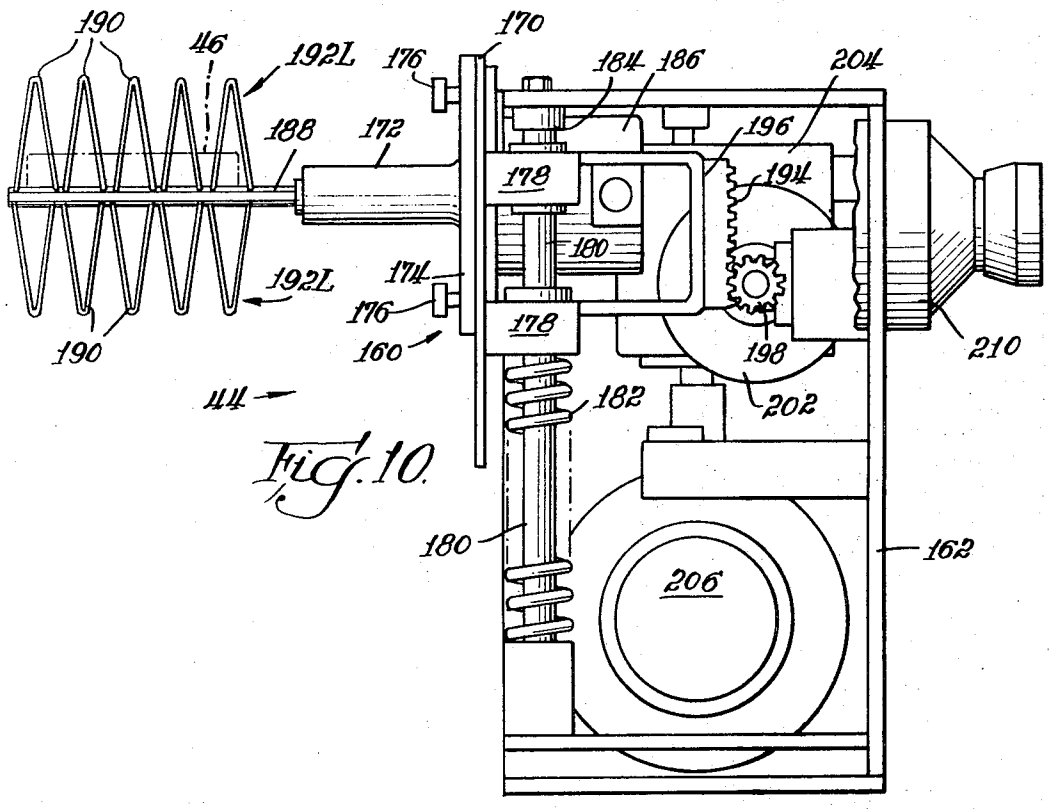
190
46
192L
176
170
184
186
204
188
172
196
194
178
180
174
160
198
210
202
182
44
206
162

Fig. 10.

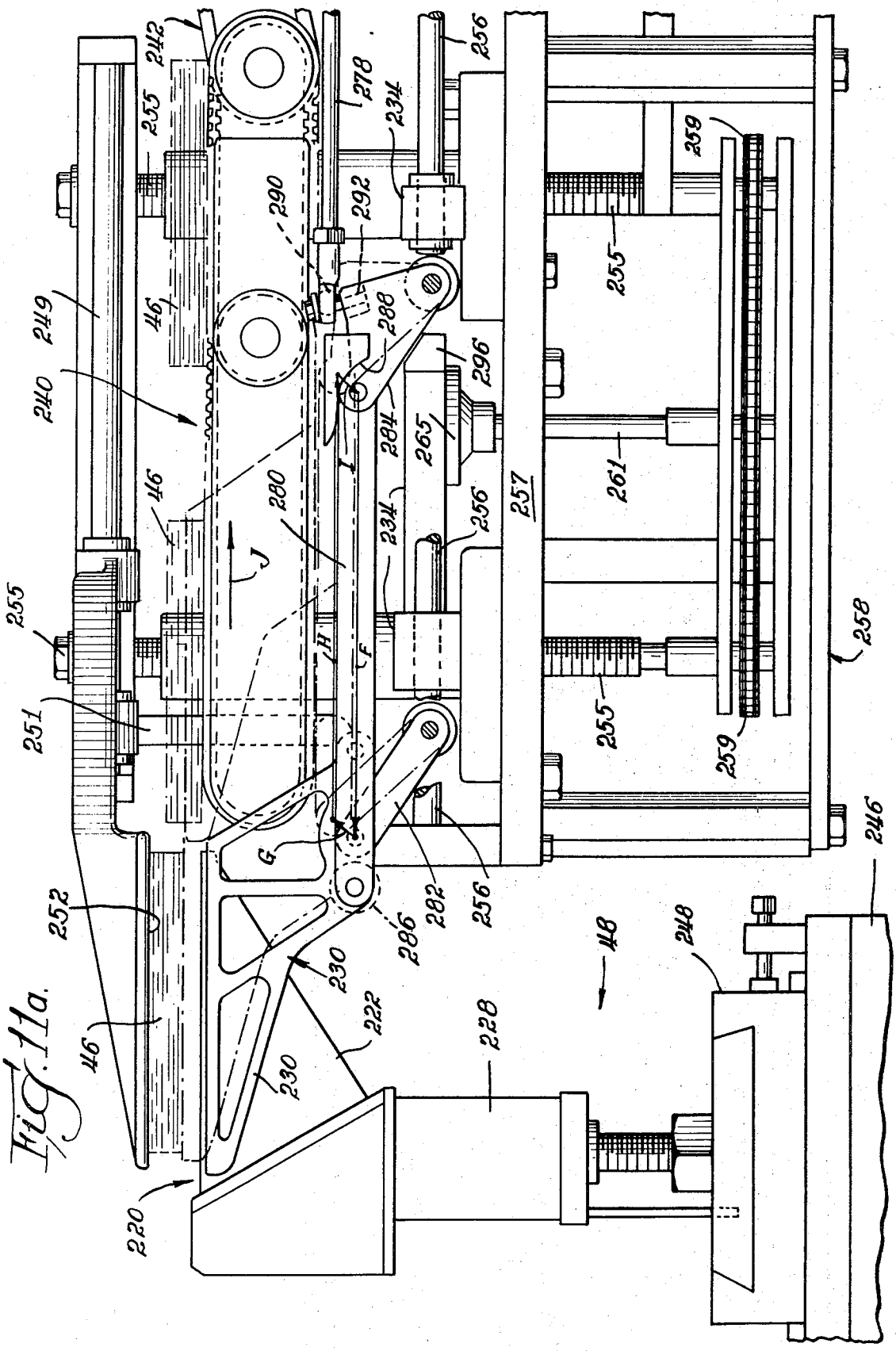
242
255
278
234
256
259
290
292
288
249
46
240
296
284
265
261
257
280
J
H
F
G
251
252
286
282
230
222
228
220
48
248
246
258

Fig. 11a.

Fig. 11b.

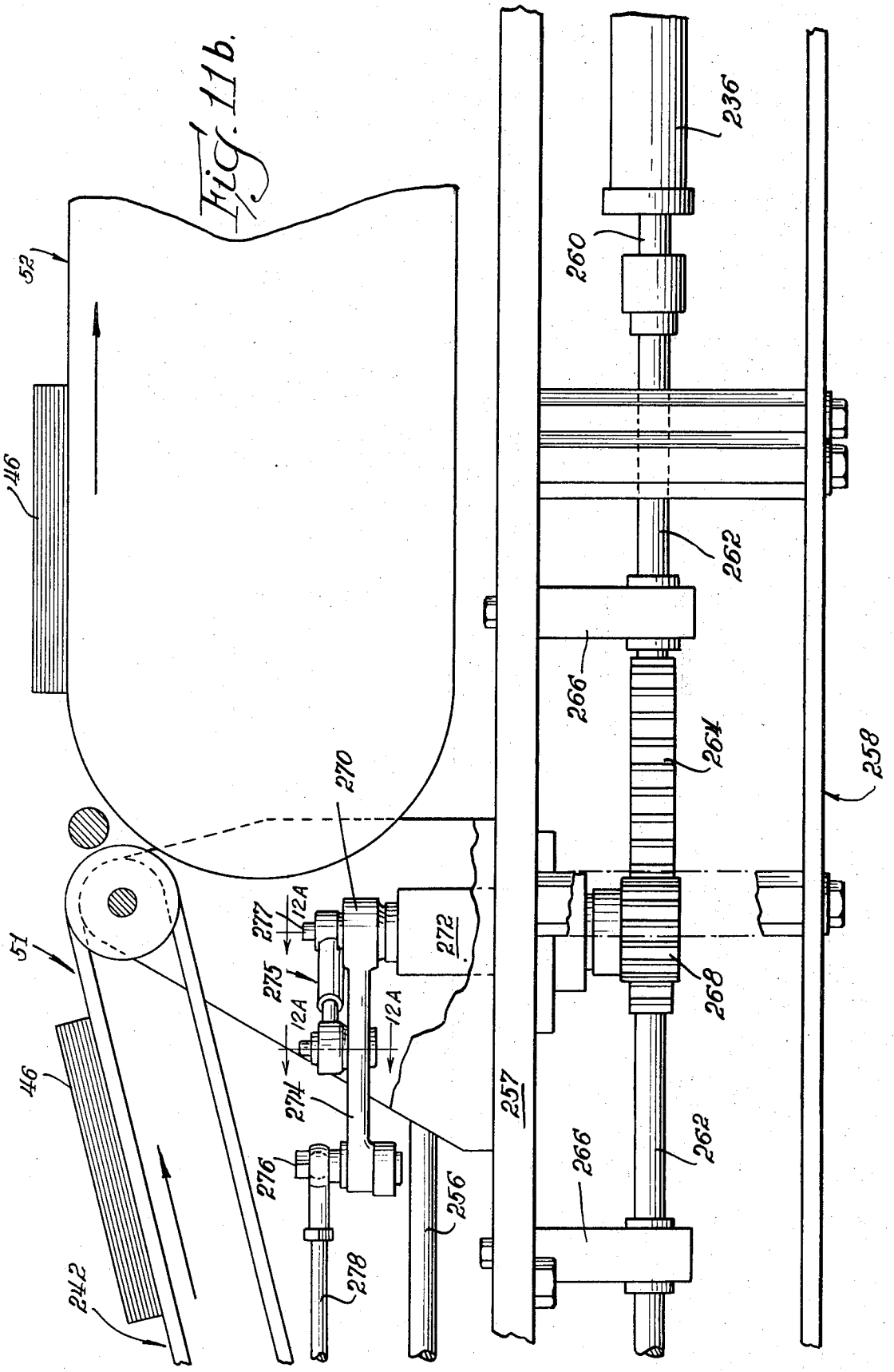
52
46
51
46
242
270
277
12A
275
12A
12A
274
276
278
256
272
257
236
260
262
266
264
268
266
262
258

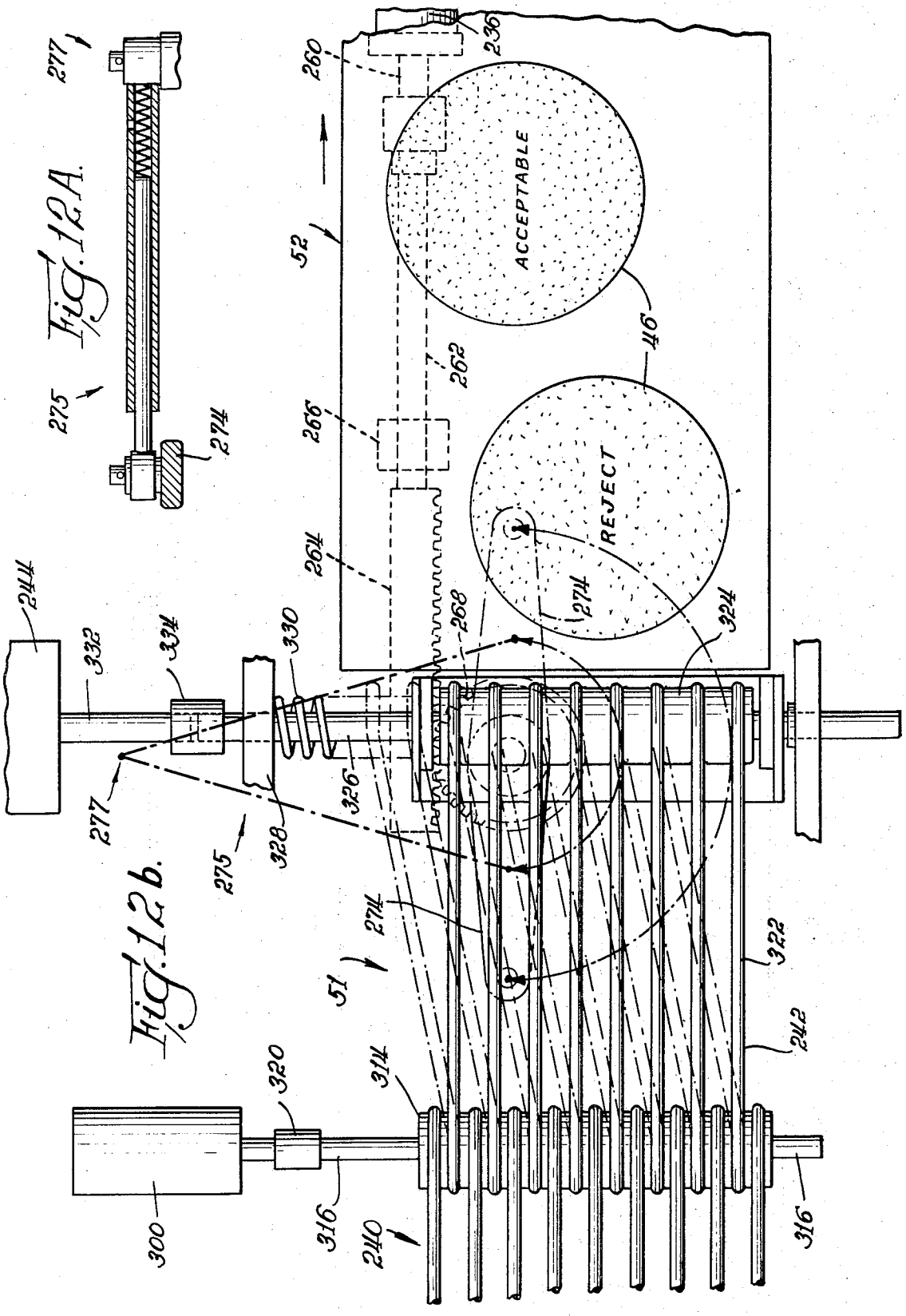

Fig. 12A.

Fig. 12b.

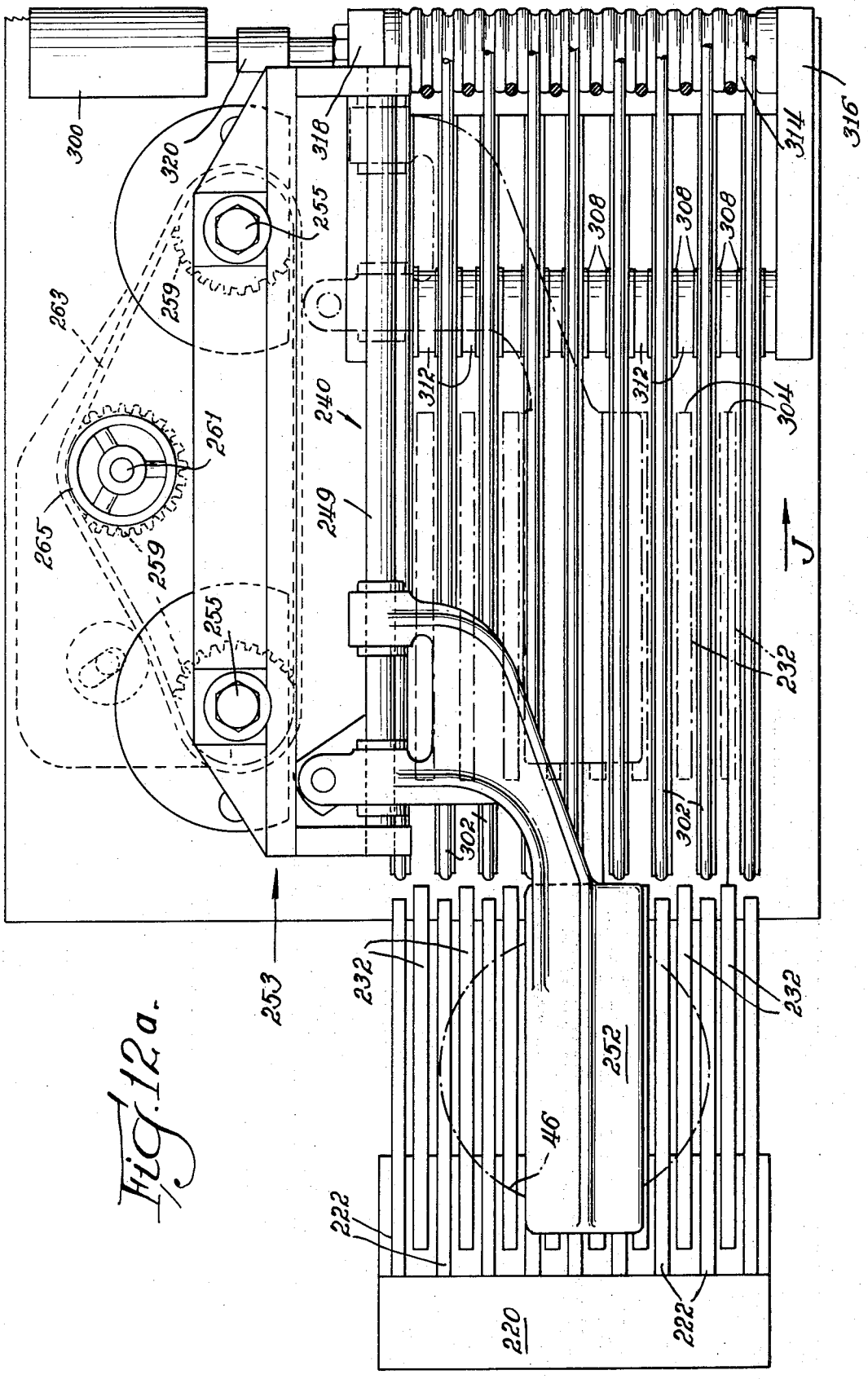
300
320
318
255
259
263
261
265
240
249
308
312
304
314
316
232
302
253
252
46
222
220

Fig. 12a.

FIG 13A

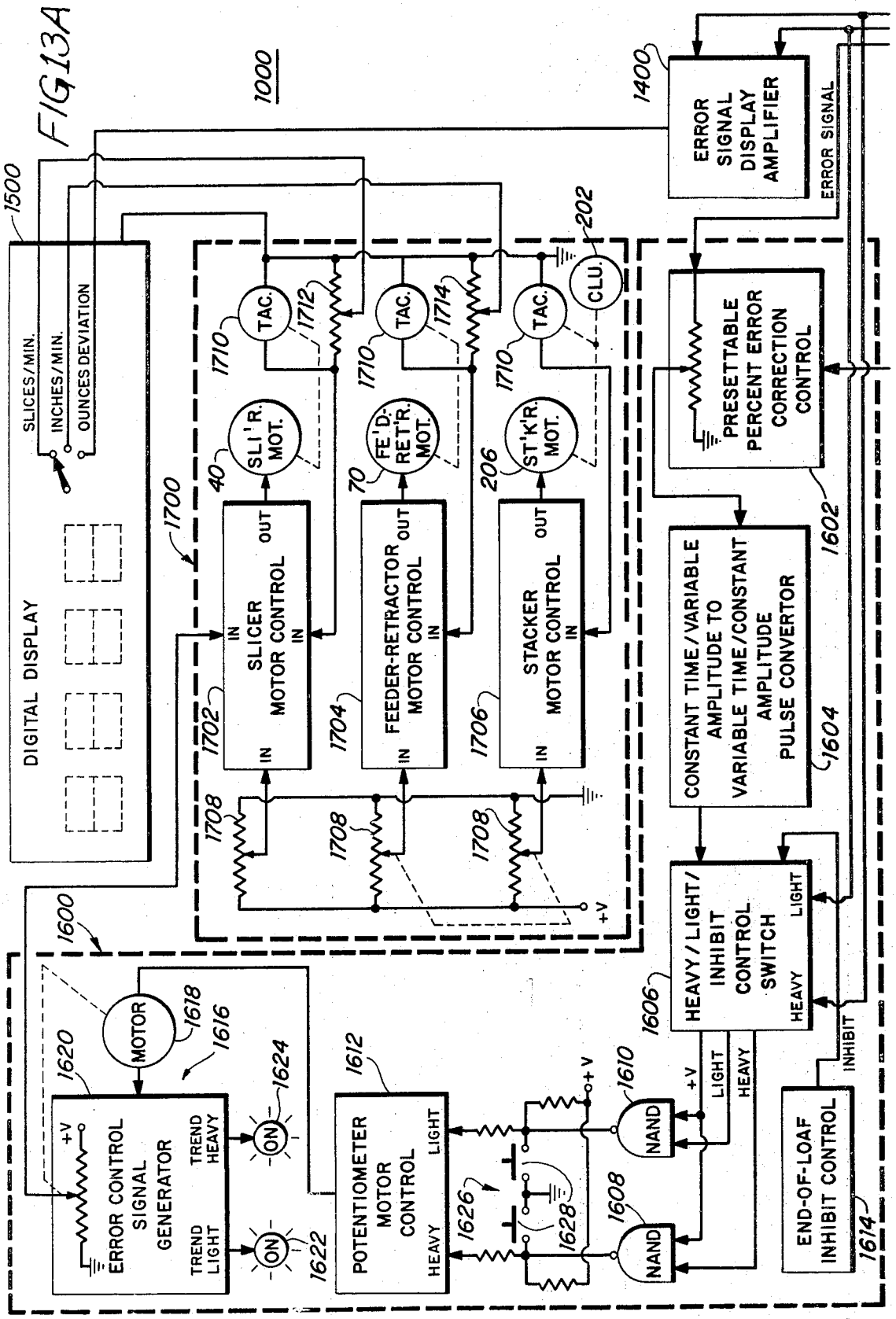
1000
1500
DIGITAL DISPLAY
SLICES/MIN.
INCHES/MIN.
OUNCES DEVIATION
1400
ERROR SIGNAL DISPLAY AMPLIFIER
ERROR SIGNAL
1700
1702
SLICER MOTOR CONTROL
1704
FEEDER-RETRACTOR MOTOR CONTROL
1706
STACKER MOTOR CONTROL
IN
OUT
1708
+V
1710
TAC.
1712
1714
202
CLU.
40
SLI'R. MOT.
70
FE'D-RET'R. MOT.
206
ST'K'R. MOT.
PRESETTABLE PERCENT ERROR CORRECTION CONTROL
1602
CONSTANT TIME/VARIABLE AMPLITUDE TO VARIABLE TIME/CONSTANT AMPLITUDE PULSE CONVERTOR
1604
1600
HEAVY/LIGHT/INHIBIT CONTROL SWITCH
1606
HEAVY
LIGHT
INHIBIT
1610
NAND
1608
1612
POTENTIOMETER MOTOR CONTROL
1614
END-OF-LOAF INHIBIT CONTROL
1616
MOTOR
1618
1620
ERROR CONTROL SIGNAL GENERATOR
TREND HEAVY
TREND LIGHT
1622
ON
1624
1626
1628

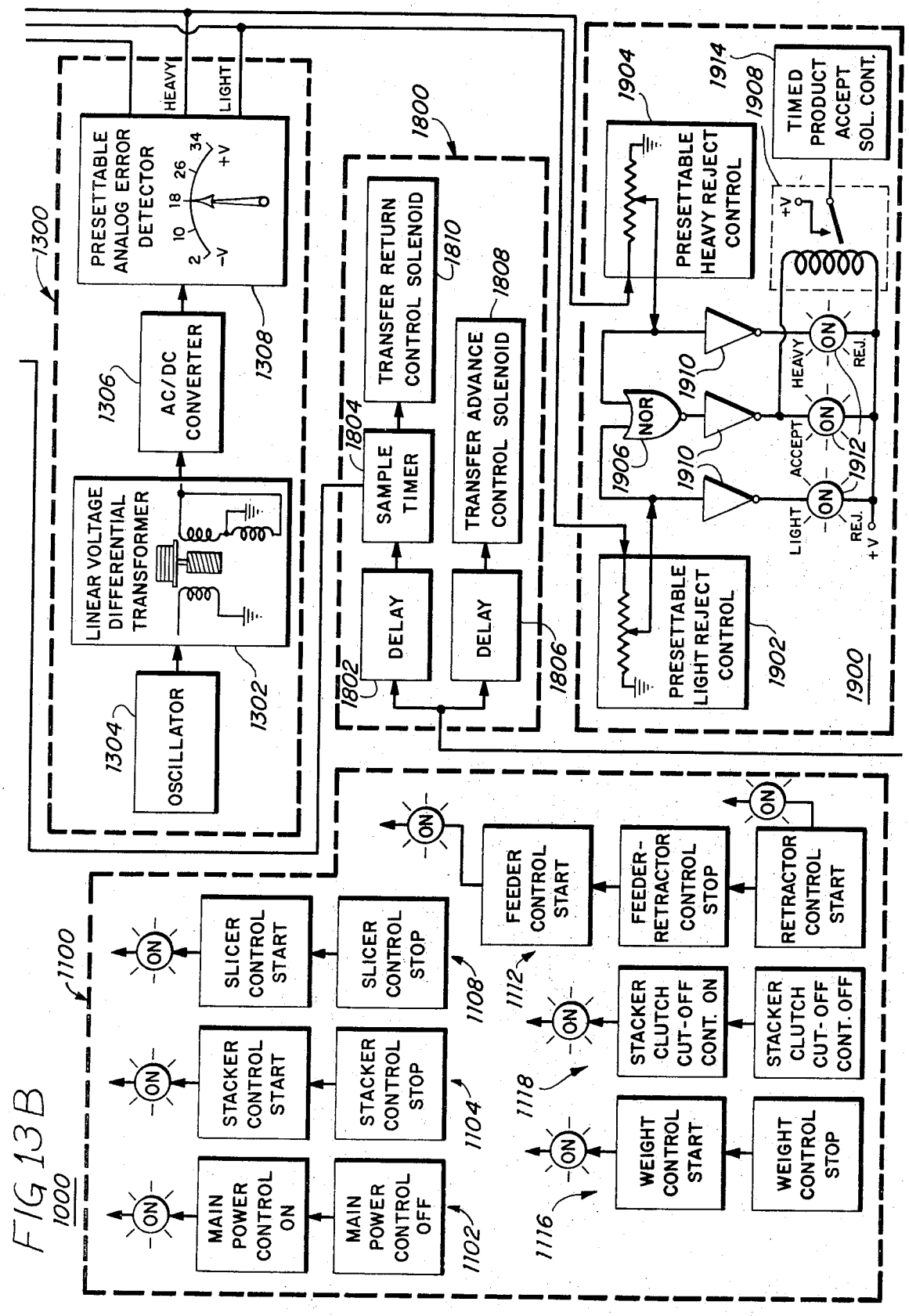
1000
1100
MAIN POWER CONTROL ON
MAIN POWER CONTROL OFF
1102
STACKER CONTROL START
STACKER CONTROL STOP
1104
SLICER CONTROL START
SLICER CONTROL STOP
1108
FEEDER CONTROL START
1112
WEIGHT CONTROL START
WEIGHT CONTROL STOP
1116
STACKER CLUTCH CUT-OFF CONT. ON
STACKER CLUTCH CUT-OFF CONT. OFF
1118
FEEDER-RETRACTOR CONTROL STOP
RETRACTOR CONTROL START
ON
1300
PRESETTABLE ANALOG ERROR DETECTOR
HEAVY
LIGHT
2
10
18
26
34
+V
-V
1308
AC/DC CONVERTER
1306
LINEAR VOLTAGE DIFFERENTIAL TRANSFORMER
1302
OSCILLATOR
1304
1800
SAMPLE TIMER
1804
TRANSFER RETURN CONTROL SOLENOID
1810
TRANSFER ADVANCE CONTROL SOLENOID
1808
DELAY
DELAY
1802
1806
1900
PRESETTABLE HEAVY REJECT CONTROL
1904
PRESETTABLE LIGHT REJECT CONTROL
1902
1906
NOR
1910
1910
1910
1912
ACCEPT
HEAVY
REJ.
LIGHT
REJ.
+V
1914
1908
TIMED PRODUCT ACCEPT SOL. CONT.
+V

FIG 13B

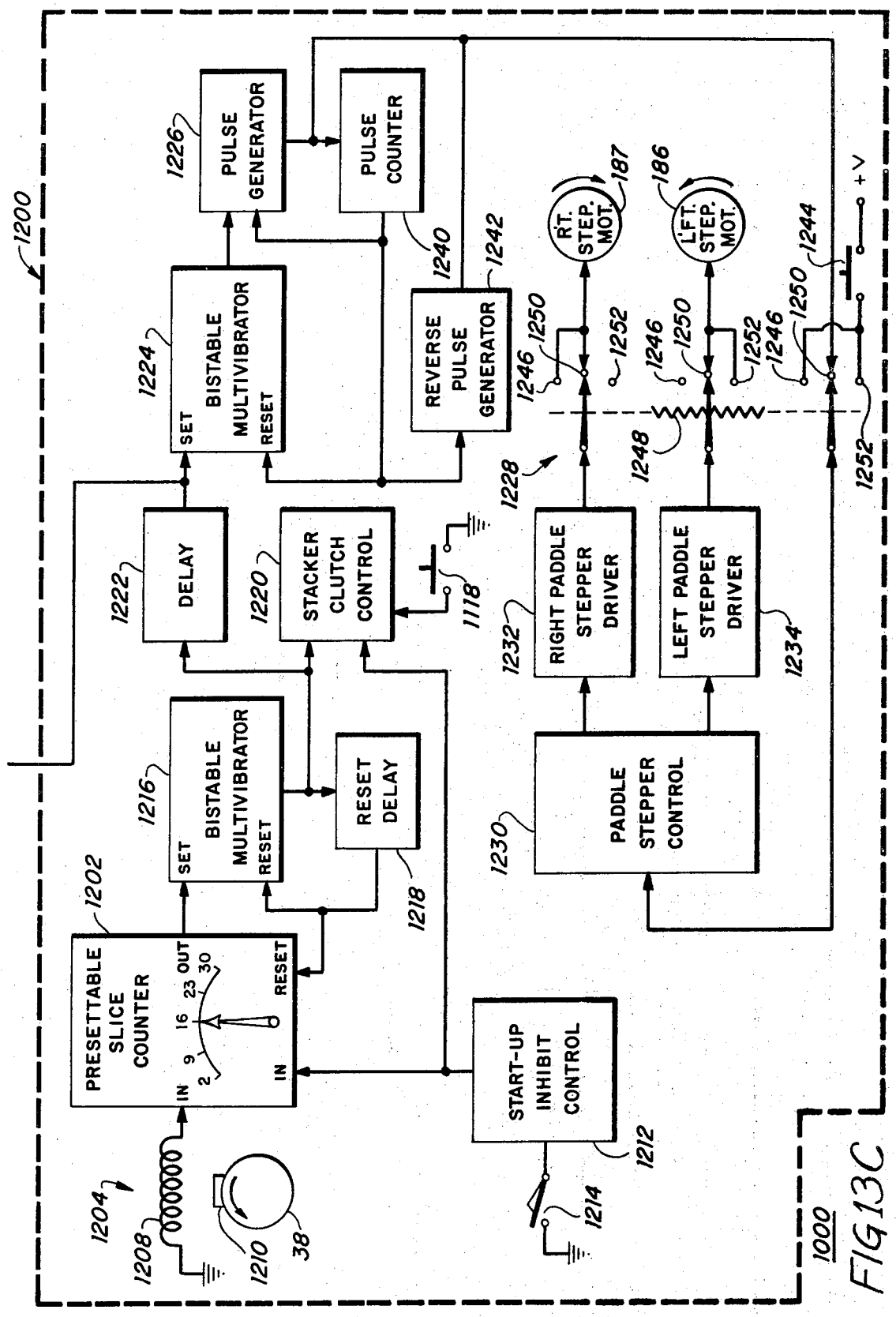
1200
PULSE GENERATOR
1226
PULSE COUNTER
1240
1242
REVERSE PULSE GENERATOR
1224
BISTABLE MULTIVIBRATOR
SET
RESET
1222
DELAY
1220
STACKER CLUTCH CONTROL
1118
1216
BISTABLE MULTIVIBRATOR
SET
RESET
RESET DELAY
1218
1202
PRESETTABLE SLICE COUNTER
IN
2
9
16
23
30
OUT
RESET
IN
1204
1208
1210
38
START-UP INHIBIT CONTROL
1212
1214
1228
RIGHT PADDLE STEPPER DRIVER
1232
LEFT PADDLE STEPPER DRIVER
1234
PADDLE STEPPER CONTROL
1230
RT. STEP. MOT.
187
LFT. STEP. MOT.
186
+V
1244
1246
1248
1250
1252
1000

FIG 13C

METHOD AND APPARATUS FOR PRODUCING WEIGHT CONTROLLED GROUPS OF SLICED FOOD PRODUCT

The present invention is directed towards a new and improved method and apparatus for producing weight controlled stacks or groups of counted slices cut from an elongated mass or loaf of a food products such as cold cuts, sausage, cheese or the like. Food products such as process cheese, luncheon meats, bologna, salami and the like are produced in elongated loaves, often four to six feet long, having generally uniform cross-sections of various shapes and dimensions. These products are sold at retail outlets to the consuming public in relatively small packages containing a selected number of relatively thin slices cut transversely from the loaf.

In commercial practice, each package containing a stack or other group of counted slices must have a net food product weight exceeding or at least equal to a weight printed or otherwise indicated on the package. It is desirable to produce such packages which closely meet the weights indicated on the packages with a minimum number of underweight rejects. Also it is very important to minimize the amount of excess food product furnished above the weights indicated on the packages. Thus, great savings can be obtained by mass producing the packages within close tolerances on an automatic weight-controlled slicing system capable of operating at high production rates.

Prior cutters and weighers are capable of maintaining production rates of only about 20 percent of the production rate of the apparatus of the present invention. Accordingly, the present invention provides great economic savings in terms of an increased production rate, a reduction in the occurrence of underweight and overweight packages and a significant savings in labor cost per package.

It is therefore an object of the present invention to provide a new and improved method and apparatus for producing weight controlled stacks of counted slices cut from an elongated mass or loaf of food product.

Another object of the present invention is to provide a new and improved method and apparatus of the character described, which is capable of operating at high production rates and maintaining a low percentage of underweight rejects while at the same time minimizing the amount of excess packaged food product above the minimum package weight required.

Another object of the present invention is to provide a new and improved apparatus of the character described which is extremely fast and reliable in operation and which is automatic from the time that a loaf of food product is first introduced into the system until after the weight classified stacks or other groups of counted slices leave the system for further handling.

Another object of the present invention is to provide a new and improved slicer for continuously cutting successive slices from an elongated loaf of food product wherein the loaf is moved uninterruptedly along a feed path into a cutting path and wherein a speed adjustable rotary knife is provided for cutting successive slices from the loaf at a rotary speed controlled according to the weight of the slices.

Another object of the present invention is to provide a slicer having a new and improved feeder for feeding a loaf of food product along a feed path into the cutting path of a rotary knife.

Another object of the present invention is to provide a new and improved slicer of the character described wherein the loaf is fed through a restricted orifice located above the cutting path of the knife for compressively holding and positively aligning the loaf at a level closely adjacent to the cutting path of the knife.

Another object of the present invention is to provide a new and improved slicer of the character described wherein the orifice is tapered inwardly in the direction of the feeding of the loaf.

Another object of the present invention is to provide a new and improved slicer of the character described wherein the margin of the orifice is positioned to provide a shearing surface cooperating with the knife in the cutting of successive slices from the loaf.

Another object of the present invention is to provide a new and improved slicer for cutting successive slices from elongated loaves of food product wherein the speed of a rotary knife is varied in response to a signal produced from a slice weight measuring means.

Another object of the present invention is to provide a new and improved slicer of the character described in combination with a stacker for accumulating slices cut successively from a loaf and for separating the slices into separate groups containing a selected number of slices.

Another object of the present invention is to provide a new and improved stacker of the character described wherein each successive slice cut from a loaf falls a substantially constant distance onto a receiver movable downwardly at a rate infinitely variable within a range to equal substantially the rate at which the loaf is fed to be sliced.

Another object of the present invention is to provide a new and improved stacker of the character described having means for rapidly releasing a group of a counted number of accumulated slices without interruption of the succession of slices from the cutter supplied to the stacker.

Another object of the present invention is to provide a new and improved stacker of the character described which does not require interruption of the feed of the loaf during the time a group of counted slices is released by the stacker.

Another object of the present invention is to provide a new and improved stacker of the character described operable to rapidly deposit an accumulated stack of slices onto a weighing device.

Another object of the present invention is to provide a new and improved weighing system capable of accurately weighing an accumulated group of slices and producing a signal in response thereto.

Another object of the present invention is to provide a new and improved weighing system of the character described wherein the signal produced represents a deviation in the weight of a group of slices from a selected reference weight.

Another object of the present invention is the provision of a new and improved control means for automatically controlling the apparatus of the present invention to divide an elongated mass of a food product into a plurality of separate groups, each group containing a plurality of separate members, said control means including means for weighing each of the groups and for

determining whether the weight of each of the groups is within a predetermined acceptable weight range.

Another object of the present invention is the provision of a new and improved control means for automatically controlling the apparatus of the present invention to divide an elongated mass of a food product into a plurality of separate groups, each group having a plurality of separate members, wherein the control means includes means for weighing each of the groups and for generating an error signal indicative of the amount by which the weight of each of the groups differs from a predetermined desired weight.

Another object of the present invention is the provision of a new and improved control means for automatically controlling the apparatus of the present invention to divide an elongated mass of a food product into a plurality of separate groups, each group having a plurality of separate slices, wherein the control means includes a slicer mechanism having means for adjusting the slicing rate in response to a signal indicative of the amount by which the weight of each of the groups differs from a predetermined desired weight.

Another object of the present invention is to provide new and improved means for dividing an elongated mass of a food product into a plurality of separate groups, each group having a plurality of separate slices, and means for forming the plurality of separate groups, wherein the forming means includes means for receiving the slices to form the separate groups sequentially, and means for discharging each sequentially formed group from the receiving means in response to a control signal.

Another object of the present invention is the provision of new and improved means for dividing an elongated mass into a plurality of separate groups, each group having a plurality of separate members, wherein the dividing means includes a slicing mechanism for forming the separate members and means for increasing the speed of the slicing mechanism in response to the receipt of a signal indicating that the weight of one of the plurality of groups of separate members is greater than a predetermined desired weight.

Another object of the present invention is to provide new and improved means for dividing an elongated mass into a plurality of separate groups, each group having a plurality of separate members, wherein the dividing means incudes a slicing mechanism for forming the separate members and means for decreasing the speed of the slicing mechanism in response to the receipt of a signal indicating that the weight of one of the plurality of separate groups of separate members is less than a predetermined desired weight.

Another object of the present invention is to provide new and improved means for dividing an elongated mass into a plurality of separate groups, each group having a plurality of separate members, wherein the dividing means includes means for controllably discharging each of the groups of separate members along one of two discharge paths dependent upon the presence or absence of a control signal.

Another object of the present invention is to provide new and improved means for dividing an elongated mass into a plurality of separate groups, each group having a plurality of separate members, wherein the dividing means includes means for discharging one of the groups of separate members along a first of two discharge paths in response to the receipt of a control signal indicating that the weight of that one group is outside of a predetermined acceptable weight range.

Another object of the present invention is to provide new and improved means for dividing an elongated mass into a plurality of separate groups, each group having a plurality of separate members, wherein the dividing means includes means for discharging one of the plurality of separate groups of separate members along a second of two discharge paths after a determination that the weight of that one of the plurality of separate groups is within a predetermined acceptable weight range.

Another object of this invention is to provide new and improved mechanism for transferring successive groups of sliced material from a platform.

Another object of the present invention is to provide new and improved mechanism of the character described comprising a platen having a plurality of fingers adapted to move upwardly through parallel slots extending inwardly from an edge of the platform and a stop member positioned above the platen to engage the uppermost of the slices to limit upward travel of the group as the group is elevated, and means for laterally moving the platen toward and away from the platform.

Another object of the present invention is to provide new and improved mechanism of the character described including means for lifting the platen from a lower to an upper level to elevate a group of slices from a platform at the beginning of a return stroke and for lowering the platen to deposit a group of slices on the upper belt runs of a belt conveyor at the end of a return stroke.

Another object of the present invention is to provide new and improved apparatus for classifying successive groups of the slices.

Another object of the present invention is to provide new and improved classifying apparatus of the character described comprising weighing means for producing signals responsive to the weight of successive groups, a conveyor having a receiving portion and a discharging portion, the discharging portion being movable between a first and a second position, means for transferring successive groups from the weighing means to the receiving portion of the conveyor, and means for moving the discharging portion of the conveyor between the first and second positions in response to selected ones of the signals.

Another object of the present invention is to provide new and improved classifying apparatus of the character described wherein the conveyor has conveying and returning runs and comprises endless parallel bands entrained over parallel roll means at opposite ends of the runs of the conveyor and wherein the moving means axially shifts the roll means at one end of the runs in response to the aforesaid selected ones of the signals.

These and other objects, features, and advantages of the present invention will be evident from the following description, with the aid of the accompanying drawings, of a preferred embodiment of the present invention.

Briefly, in a preferred embodiment of the apparatus of the present invention there is provided an automatically controlled apparatus for producing weight controlled stacks of a selected counted number of slices cut from an elongated mass or load of food product. The apparatus includes means for feeding the loaves

longitudinally in end-to-end relation along a downward feed path at a substantially constant feed rate into the cutting path of a rotary slicing knife. A stacker mechanism below the cutting path is provided for receiving and accumulating a selected number of slices into groups and then releasing or depositing the groups on a weighing system scale for measuring the weight thereof without requiring interruption of the normal feed rate of the loaves fed to the knife of the slicer. The weighing system provides a signal for initiating speed changes in an adjustable speed motor driving the rotary knife thereby to vary the thickness of the slices being cut from the loaf in response to the weight of a stack or group of slices weighed. The signal from the weighing system is also provided for initiating action of a product accept-reject mechanism which delivers the stacks in succession to a discharge conveyor. The position of delivery to the conveyor is indicative of whether or not the stack is to be accepted or rejected. A high speed transfer system is provided for removing the weighed stacks of sliced product from the scale platform of the weighing system and for transferring the stacks to the product accept-reject mechanism.

For a better understanding of the present invention reference should be had to the following detailed description taken in conjunction with the drawings in which:

FIG. 1 is a side elevational view of a new and improved apparatus for producing weight controlled groups of sliced food product and the like constructed in accordance with the features of the present invention;

FIG. 2 is a top plan view of the apparatus of FIG. 1;

FIG. 3 is an isometric diagram in schematic animated form illustrating the flow path of movement of the food product as it is moved through the various components of the complete apparatus;

FIG. 4 is an enlarged top plan view looking downwardly into the upper receiving end of a feeder for directing the loaves into the slicer of the apparatus in accordance with the present invention;

FIG. 5 is an elevational sectional view of the feeder taken substantially along line 5—5 of FIG. 4;

FIG. 6 is an elevational sectional view taken substantially along line 6—6 illustrating a drive train arrangement for the belts of the feeder;

FIG. 7 is an elevational sectional view of the feeder drive train taken substantially along line 7—7 of FIG. 4;

FIG. 8 is a horizontal sectional view illustrating a stacker of the apparatus in accordance with the features of the present invention;

FIG. 9 is a front elevational view of the stacker;

FIG. 10 is a transverse sectional elevational view taken substantially along line 10—10 of FIG. 9;

FIGS. 11*a* and 11*b* are a side elevational view of a weighing system and transfer system of the apparatus in accordance with the present invention;

FIGS. 12*a* and 12*b* are a top plan view of the weighing and transfer systems showing a product accept-reject mechanism of the apparatus in accordance with the present invention;

FIG. 12A is a sectional view taken substantially along line 12A—12A of FIG. 11, and

FIGS. 13A, B, and C illustrate schematically an electrical control system for operating and controlling the apparatus of the present invention.

DESCRIPTION OF THE APPARATUS

Referring now more particularly to the drawings, in FIGS. 1, 2 and 3 is illustrated in general fashion a new and improved apparatus 20 constructed in accordance with the features of the present invention for producing weight controlled stacks or groups containing a selected number of slices cut from an elongated mass or loaf of food product such as cheese, meats, cold cuts, sausage, etc. The system is especially well adapted for producing discrete or separate groups or stacks of a counted number of slices of food product, each group having a measured weight equal to or exceeding a selected net weight which is printed or indicated on the package in which the stack is sold. The apparatus includes a loader 30 for receiving elongated masses or loaves 32 of food product or the like and elevating, orienting and feeding the loaves in end-to-end relation onto a downward feed path toward a feeder 34. The feeder is adapted to feed the loaves at a selected feed rate into the cutting path of a rotating knife 36 of a slicer 37. The knife is carried on a shaft 38 generally parallel to the feed path of the loaves into the slicer and is driven by a variable speed motor 40 to vary the thickness of the slices to produce stacks or groups meeting a minimum weight measurement for a selected number of slices in a package. The knife motor and shaft are supported from a top wall 108 of a knife housing 110, which housing in turn is pivotally supported from a main apparatus housing 164 (FIGS. 1 and 2) on a pair of pivot pin assemblies 168. The main housing 164 is supported from a floor or other structure on legs 166.

As shown in FIG. 5, the cutting path of the rotating knife 36 beneath the top wall 108 of the knife housing is in shearing relation with the margin or lower edge of a restrictive orifice defining ring 42 positioned at the lower or discharge end of the feeder 34. The feeder 34 guides the loaves through the restricted orifice opening which compresses and holds the product as the slices are cut therefrom. As the slices are cut by the knife they fall onto a stacker or stacking mechanism 44 (FIGS. 8, 9 and 10) for accumulation and separation into groups or stacks 46, each of which contains a counted selected number of slices having a prescribed minimum weight. The stacker 44 accumulates a counted selected number of slices which are fed from the slicer at substantially constant intervals between slices and discharges or deposits the stacks onto a scale platform 220 of a weighing system 48 which includes means for rapidly weighing the stacks and determining whether or not a stack meets the minimum weight requirement. The weighing system provides a control signal for adjusting the speed of the motor 40 and consequently the knife speed to vary the thickness of the slices cut so that subsequent stacks will closely approach a desired optimum weight value. After weighing of the stacks has been completed the stacks are removed from the scale platform by a transfer system 50 and are classified by a product accept-reject mechanism before deposit onto a discharge conveyor 52.

In accordance with the present invention the weighing system 48, in conjunction with the accept-reject system 51 of the transfer system 50, positions the stacks

46 of slices on the final discharge conveyor 52 in a manner whereby the position of the stacks indicates whether the stack is of acceptable weight or must be rejected because it is underweight or overweight. As shown in FIG. 2, one of the stacks 46 is positioned out of line with respect to the other stacks moving along the conveyor and this out of line position is an indication to an operator at a subsequent processing or machine location that the stack is a reject and should be returned for rework.

The method and apparatus 20 of the present invention is adapted to handle elongated masses or loaves 32 of meat and other food products such as cheese, etc., which is produced with a variety of different transverse cross sectional shapes and dimensions and the apparatus is adjustable by an operator to produce stacks of slices numbering in a wide range, for example, from two to 29 slices per stack, and a wide range of stack weights, for example a range from approximately two to thirty ounces. Depending upon the density of the particular product being sliced, the number of slices in a stack to provide a given weight may vary somewhat and an operator may select both the number of slices in a stack and a minimum stack weight, as well as a tolerance range for overweight rejects to thereby minimize the amount of extra product supplied over the minimum required. A control console 39 with suitable indicators is provided for the operator for monitoring and selecting the number of slices and the weight minimum for the stacks. The elongated loaves of product to be sliced are of a substantially uniform cross-section throughout their length except possibly for the ends of the loaves which may be rounded in a sort of bullet shape.

The loaves 32 are normally brought at random time intervals by trucks or the like to the loader 30 and are unloaded to lay side by side horizontally on a table structure 54 which is positioned at a normal working or supply level. The loaves are held in readiness on the table structure and elevated one by one by an upright elevating mechanism 56 to an upper level for eventual discharge in longitudinal end-to-end relation by a lateral discharge conveyor 58. The loaves are directed laterally outwardly by the conveyor into a downwardly curving chute structure 60 which changes their direction of feed from generally horizontal toward a vertical feed path into the upper end of the feeder 34. If it is desired or necessary the bullet shaped ends 32a of the loaves may be chopped off or cropped in the loader by a pair of rotating knives 62 driven by motors 64. Details of the loader 30 are set forth in the copending U.S. Pat. application Ser. No. 293,145 filed Sept. 28, 1972 and assigned to the same assignee as the present application.

The loaves 32 are directed by the feeder 34 into the slicer 37 along a downward feed path through the restricted orifice opening in the orifice ring 42. The feed path intersects the cutting plane of the rotating knife 36 below the top wall 108 of the knife housing. The feeder 34 includes a pair of cleated endless belts 66 and 68 driven at a selected speed by a reversible feeder-retractor motor 70. The belts 66 and 68 are cleated on both sides and are driven by a pair of lower drive rolls 72 and 74 having cleat engaging ridges and grooves thereon for positively synchronizing the feed speed of the belts to produce a substantially constant rate of feed into the cutting path. The drive roll 72 is mounted on a shaft 76 having a toothed gear 78 on one end, which gear is in driven engagement with a main drive gear 80 (FIG. 6). The drive gear 80 is carried on a shaft 82 coupled to the output shaft of the motor 70. The cleated belt 66 is movable along a fixed, downwardly extending belt run and the opposite belt 68 is adjustable laterally toward and away from the belt run to accommodate different cross-sectional shapes and sizes of loaves that are handled by the feeder. The drive roll 74 of the cleated belt 68 is mounted on a shaft 84 having a gear 86 on one end thereof and this gear is in driving engagement with an idler gear 88 mounted on an idler shaft 90. The shaft 90 is linked with the shaft 82 by a pivot link 92 and, as best shown in FIG. 6, as adjustments in the lateral spacing between the endless drive belts 66 and 68 are made, the gear 86 is moved toward and away from the gear 78 (as indicated by the arrow "A") while in continuous synchronous driven engagement therewith through the main driven gear 86 and the idler gear 88. In order to insure that the idler gear 88 is continuously biased into driving engagement between the gears 80 and 86, the shaft 90 includes a flatted end portion 90a which is urged downwardly by a finger 92 biased downwardly by a coil spring 94 (FIG. 7).

The upper ends of the belts are supported by idler rolls 96 and 98 respectively and each belt has an inside, downward run opposite and facing the other for positive driving engagement on opposite sides of the loaves 32. As best shown in FIG. 5 the belt 66 is provided with a backing guide member 100 having a belt engaging surface formed with alternate ridges and grooves thereon providing an undulated guide path for the driving run of the belt. The belt 68 has a similar backing guide member 102 with an undulated guide surface and the ridges on one guide member are disposed opposite the grooves on the opposite guide so that a serpentine path is defined between the guides 100 and 102 by the driving runs of the belts 66 and 68. The serpentine path provided by the drive runs of the belts 66 and 68 provides for positive gripping and feeding of the loaves into the slicer 37 and a substantially constant downward feed rate is maintained with very little if any slippage. The belt backing guides 100 and 102 insure that each loaf passing through the feeder 34 is positively fed along a precise feed path into the cutting path of the knife 36 at a substantially constant selected feed rate.

In order to accommodate loaves 32 having various different cross sections and transverse dimensions, the belt 68 and backing structure 102 are supported on a support 104 movable toward and away from the run of the belt 66 which is relatively fixed and supported from a structure 106. Both belt support structures extend upwardly from the top wall 108 of the knife housing 110 are offset from the axis of rotation of the knife. The wall 108 is octagonal in shape as shown in FIG. 2 and normally is positioned to overly a similarly shaped opening in the top wall of the main housing 164 when the slicer is in a normal operating position. When it is desired to clean the slicer or change the knife 36, the knife housing 110 is pivoted on the pivot axles 168 to expose the underside of the wall 102 and knife 36. The support 106 for the belt 66 includes an upright guide 112 of generally Z-shaped transverse cross-section (FIG. 4) and the lower end of this structure is attached to the housing wall 108 by a pair of pivot pins 114 hav-

ing pull rings in the end for extracting the pins so that the feeder **34** may be disconnected from the knife housing **110** for cleaning or maintenance if required. The pins **114** normally extend through aligned apertures in a pair of brackets **116** secured to the guide structure **112** and a pair of upstanding brackets **118** mounted on the top wall **108** of the knife housing.

As best shown in FIG. **5**, the Z-shaped guide **112** is formed with a plurality of spaced apart, horizontal fingers **120** along one flange thereof, said fingers projecting outwardly of the face of the driving run of the belt **66** for engaging and laterally guiding a transverse side of a loaf **32** fed down the feed path into the orifice ring **42.** The support **104** for the belt **68** includes a similar guide **122** of Z-shaped transverse cross-section (FIG. **4**) and this guide has a plurality of spaced apart, horizontal fingers **124** along one flange adapted to extend into the slots and mesh between the fingers **120** of the guide **106** when the spacing interval between the belts **66** and **68** is reduced to accommodate relatively thin loaves of food product. Pairs of guide fingers **120** and **124** thus cooperate to provide a transverse guiding surface that is adjustable in width and generally transverse to paths of the driving runs of the endless belts **66** and **68.**

The guide structure **122,** endless belts **68** and backing member **102** are supported for movement toward and away from the belt **66** from a pair of parallel horizontal rods **126** disposed outwardly of opposite edges of the belts **66** and **68.** The support rods extend between sleeves **128** mounted adjacent the upper end of the upright **112** and mounting apertures provided in the upper end of an upright support **130** spaced outwardly of the belt **68.** The drive shafts **76** and **84** for the drive rolls **72** and **74** and the shafts for the upper idler rolls **96** and **98** of the belts **66** and **68,** are mounted and supported on bearings (not shown in detail) carried on the finger flanges of the respective upright guides **112** and **122.** The guide **122** is provided with a pair of support sleeves **132** similar to the sleeves **128** and in sliding engagement on the support rods **126** so that the belt **68** may be adjusted in the direction of the arrows "B" in FIGS. **4** and **5** toward and away from the belt **66.** The upright support **130** is detachably connected to the top wall **108** of the knife housing **110** by means of a pair of removable pins **134** having pull rings at one end and the pins are adapted to project through aligned openings in the lower end of the upright support **130** and a pair of upstanding lugs **136** secured to the knife housing top wall **108** (FIG. **5**). By removing both sets of pins **114** and **134,** the entire feeder **34** can be dismounted from the knife housing **110** of the slicer **37** and if only the pins **134** are removed, the structure of the feeder can be pivoted in a counterclockwise direction (FIG. **5**) about the axis pins **114** to expose the lower or discharge end of the feeder and expose the removable orifice ring **42.**

Orifice rings having various different shapes and sizes of restricted orifices are insertable in an opening in the housing top wall **108** offset outwardly of the axis of the drive shaft **38** of the knife as best shown in FIG. **5.** Each time that loaves of a different cross-section are sliced, an appropriately shaped orifice ring is inserted and locked in place in the opening in the knife housing top wall **108.**

Adjustment of the position of the endless belt **68** toward or away from the belt **66** in the directions indicated by the arrows "B" to accommodate different types of product is set and controlled by a hand wheel **138** mounted on the end of a threaded shaft **140.** The shaft, which extends through an internally threaded collar **142** provided on the upright, **130,** is coupled at its inner end to the back side of the guide member **122** via a coupling **144.** Turning of the hand wheel **138** positively adjusts and holds spacing between the belts **66** and **68** providing a serpentine path of selected width for the loaves **32** fed into the cutting path of the knife **36.**

Referring to FIG. **4,** the feeder **34** is provided with an elongated upright guide bar **146** spaced opposite the cooperating guide fingers **120** and **124** and adjustably positioned to move toward and away from the guide fingers as well as toward and away from the faces of the belts **66** and **68** as indicated in the dotted lines of FIG. **4.** The guide bar **146** is provided with a pair of support pins **148** extending outwardly and slidably mounted in openings provided in a separate upright member **150.** The upright **150** in turn is slidably supported on a pair of rods **152** extending outwardly from a relatively fixed member **154.** A hand wheel **156** on the outer end of a threaded adjustment rod **158** is provided for adjusting (in the direction of the arrows "C") and setting the position of the guide bar **146** (FIG. **4**) relative to the opposite guide fingers **120** and **124.** The inner end of the adjustment rod **158** is rotatively coupled to the guide bar and the rod extends through an internally threaded collar attached to the member **150** to provide in and out position adjustment of the guide bar relative to the support member **150.** The support **150** is slidable on the rods **152** and is movable in the direction of the arrows "D." Clamping means is provided for securing the member **150** in a selected position on the rods **152** after an adjustment is made and a position is selected.

The elongated loaves **32** of food product are positively fed at a selected substantially constant rate along the feed path by the driving engagement of the driving runs of the cleated feed belts **66** and **68** and the product is compressed and bent in reverse direction as it moves down the serpentine path defined by the belts and their backing members **102.** Each loaf is positively gripped by the belts and fed into the path of the cutting knife **36** so that little if any slippage occurs. The loaves are retained between the feed belts by the cooperating guide fingers **120** and **124** on one side and the adjustable guide bar **146** on the opposite side.

In accordance with the present invention, in order to hold and precisely guide the product loaves **32** in cutting engagement with the rotating knife **36,** the insertable orifice rings **42** are seated in the opening provided in the top wall **108** of the knife housing. For each different cross-sectional shape or size of loaf being slices, an appropriate orifice ring **42** is provided. The rings are dimensioned so that the dimension at the lower edge or margin of the orifice opening is slightly smaller than the normal uncompressed cross-section of the product loaf being sliced. The loaves, being substantially uniform in cross-section, are compressed inwardly towards the longitudinal axis thereof by engagement with the walls of the orifice ring **42.** The loaves are also compressed in a longitudinal direction when forced through the orifice ring because the walls of the orifice opening are convergently tapered. The orifice ring and its compression effect on the loaf supports the end portion and per-

mits a loaf to be sliced down to its end after it is no longer in engagement with the belts of the feeder.

As shown in FIG. **5**, the margin or lower edge of the orifice ring **42** is secured in shear cutting relation with the cutting path defined by the cutting edge of the rotating knife **36** so that precise and rapid slicing of the positively held food product loaves **32** is achieved. As slices from the loaf **32** are cut by the high speed rotary knife **36**, the individual slices fall downwardly from the cutting path for grouping into stacks having a selected number of slices therein by the stacker **44** (FIGS. **8, 9** and **10**). The slices are cut from the loaves **32** on an uninterrupted basis as the loaves are moved downwardly into the slicer **37** at a constant rate by the feeder **34** through the orifice ring **42.** It is a feature of the present invention that no interruption in feeding of the loaves is required because the stacker **44** is operable to rapidly handle and separate accumulated slices into stacks having the selected number of slices therein. In addition, the stacker **44** provides for a substantially constant distance of fall for each slice as it leaves the cutting plane to a level whereat the slice is supported either by a preceding slice as the stack is accumulating or by a support platen. A substantially constant distance of fall from the cutting path to a support level for each slice being cut is accomplished by providing a vertically reciprocating carriage **160** movable from an upper or starting level on a downward stroke at substantially the same speed as the loaves **32** are fed downwardly by the feeder **34** into the cutting path of the knife **36.** As a stack is collected and the height or thickness of the stack increases, the downward travel of the carriage **160** compensates to provide essentially a constant support level for each successive slice falling from the cutting path. The stacker **44** of the present invention is operable at very high speeds so that production rates as high as **160** stacks per minute or greater are achieved. The stacker includes a rectangular enclosure or housing **162** mounted beneath the knife housing **110** and within the main housing or enclosure **164** of the apparatus.

The carriage **160** comprises a vertical front plate supporting a pair of horizontal shaft housings **172** which project outwardly thereof and are detachably mounted on the front plate. The housings include circular base flanges **174** removably attached to the carriage plate by large headed fasteners **176.** The shaft housings **172** are aligned in horizontal parallel relation and are spaced on opposite sides of a vertical centerline through the front plate **170** aligned below the downward feed path of loaves moving through the feeder **34** and the slices cut from the loaves by the rotating knife **36.** As best shown in FIG. **10**, the front plate of the stacker carriage is provided with a pair of rearwardly extending lugs **178** having vertical apertures therein and slidably disposed on an upright guide rod **180** for guiding the travel of the carriage in repetitive cycles comprising downward and return strokes. The carriage is biased upwardly to an upper starting level by a coil spring **182** disposed on the rod and a cushion **184** is provided adjacent the upper end of the rod to aid in cushioning the carriage at the end of an upward return stroke. A pair of incremental stepping motors **186** and **187** are mounted on the back of the carriage plate **170** and the axes of the motors are in coaxial alignment with the left and right hand shaft housings **172.** The stepping motors are adapted to drive and are detachably coupled to a pair of outwardly extending platen control shafts **188** with each shaft supporting three rows of outwardly extending hair pin shaped fingers **190** arranged in planes spaced at angles 120° apart around the axes of the shafts as viewed in FIG. **9.** The sets of fingers **190** in each plane on the left hand shaft **188** comprises a paddle-like platen **192** and similarly for the right shaft, platens **192R** are formed. Successive pairs of horizontally aligned intermeshing platens **192L** and **192R** provide support for accumulating successive stacks of sliced product cut from the loaves **32** by the knife **36** in the cutting path above. As best shown in FIG. **9** the left and right shafts **188** are indexed by stepping motors in increments of 120° in opposite directions so that the pairs of platens **192L** and **192R** cooperate to discharge an accumulated stack downwardly toward the weighing system and the next pair of platens **192L** and **192R** then form a horizontal support for accumulating the next successive stack of slices **46** thereon.

As additional slices are cut and added to a stack formed on the platens, the carriage **160** is traveling downwardly at a rate substantially the same as the rate of feed of the loaves **32** into the cutting path of the knife **36.** Accordingly, a substantially constant distance of fall from the cutting path to a support level is provided by the stacker **44** for the successive slices in a stack. As the last slices in the stack are being added the carriage **160** is approaching the lowestmost position, and the stepping motors **186** and **187** are energized by controlled pulses to rotatively index the shafts **188** by 120° in opposite directions as shown in FIG. **9** to discharge or release the accumulated stack of meat slices and form the next support means with a successive set of cooperative platens **192L** and **192R** moving into the horizontal position ready to accumulate the slices of the succeeding stack. Indexing of the shafts **188** by the stepping motors **186** and **187** is rapid so that the already accumulated stack of slices is released and the next set of platens **192L** and **193R** move into horizontal position with no interruption of the normal feed rate of the load into the slicer. Indexing of the platens occurs during the time that the carriage **160** is moving upwardly on its return stroke by the spring **182** so that, as the first slice arrives for the next successive stack, a substantially constant dropping is maintained. As each successive slice is accumulated in a stack, the carriage **160** has moved downwardly by an increment substantially equal to the thickness of the slice.

Travel of the carriage **160** on a downward stroke while accumulating the sliced meat product is accomplished by means of a vertical, toothed rack **194** secured to the back of the carriage plate **170** on a supporting structure **196.** The rack is in meshing engagement with a pinion **198** mounted on a pinion shaft **200** which is coupled to the output shaft of an electromagnetic particle clutch **202.** An input shaft of the clutch **202** is coupled to a gear reducer **204** which in turn is coupled to the output shaft of a continuously rotating stacker drive motor **206** through a right angle gear box **208** as best shown in FIG. **9.** The stacker drive motor, the speed of which is infinitely variable over a range to enable the rate of downward movement of the carriage **160** substantially to equal the rate at which the load being sliced is fed to the slicer, is continuously energized and running when the apparatus **20** is in operation and the clutch **202** is intermittently supplied with power for precise intervals of time to rotate the pinion

198 in a counter-clockwise direction (arrow "P" FIG. 10) for driving the carriage on a downward stroke at a selected rate speed. When the carriage approaches the end of the downward stroke the holding current to the clutch 202 is discontinued to release the clutch 202 and the return spring 182 acts to return the carriage upwardly to an initial upper starting level.

In order to dampen oscillations of the carriage 160 at the end of the reciprocal strokes as the direction of movement is reversed, a dashpot assembly 210 is provided on the rear wall of the housing 162. The dashpot may be of a rotary type having a forwardly extending shaft 211 with a radial arm 212 secured thereto. The dashpot arm is engageable between upper and lower threaded adjustable stops 214 and 216 (FIG. 9), which stops are carried on upper and lower brackets or arms 218 and 219 connected to the carriage plate 170. As the carriage 160 reciprocates back and forth, the adjustable stops 214 and 216 engage opposite sides of the arm 212 on the dashpot shaft and oscillate the shaft back and forth, as indicated by the arrow "E." The dashpot 210 resists oscillatory rotation and thus dampens vibrations of the fast moving carriage 160 as it reverses direction.

In accordance with the present invention, successively accumulated stacks 46 of sliced product cut by the knife 36 are discharged from the pairs of cooperating support platens 192L and 192R upon indexing of the shafts 188 by the stepping motors 186 and 187. The discharged stacks 46 fall downwardly onto a scale platform 220 (FIG. 11) comprising a plurality of spaced apart vertical fingers 222 which are interconnecting at one side and are separated by slots 224 open on the opposite side. The platform 220 is mounted on a support rod 226 which extends downwardly and is connected to move a magnetic core of a weight cell 228. As discussed in further detail hereinafter, the weight cell 228 may comprise a transformer adapted to provide an electrical signal which is responsive to the weight of the stack of slices on the scale platform. Alternatively, the cell may be arranged to provide a signal representing the difference between the stack of slices being weighed and a selected reference or tare weight. The weighing system or mechanism 48 thus provides control signals which are used both for changing the speed of the slicer motor 40 and for activating a product accept-reject mechanism 51 to indicate by placement of the weighed stacks of slices 46 on the discharge conveyor 52 whether the stacks are within an acceptable weight range. As successive stacks 46 of the sliced product are deposited on the scale platform 220, a repetitive weight measuring cycle is initiated wherein the platform is allowed a period of time to settle so that vibrations from the impact of the falling stack are damped. Following this interval a weight measurement is taken and a signal in response to the measurement is produced. A short interval follows wherein a decision is made to cause the product accept-reject mechanism 51 to accept or reject the stack and to change the rotative speed of the slicer knife 36 if required.

Before the arrival of the next stack of sliced product, the weighed stack is removed from the scale platform 220 by the transfer system or mechanism 50 which includes a transfer platen 230 movable horizontally and vertically and comprising a plurality of horizontally spaced apart vertical fingers 232 which are adapted to move in and out and up and down without interference within the open spaces or slots 224 between the fingers 222 on the scale platform. As best shown in FIG. 11, while the stack of sliced product is being weighed, it is resting on the upper edges of the scale platform fingers 222 and the fingers 232 of the transfer platen are positioned with their upper edges at a level below the scale platform so as not to interfere with the weighing process before the stack is picked up by the transfer mechanism. After the weighing cycle is completed, the transfer platen 230 moves upwardly to elevate the stack of weighed slices 46 above the scale platform 220 and then moves laterally on a retracting stroke away from the scale (left to right in FIG. 11), to make room for the next stack of slices to be deposited on the scale platform. The transfer platen is supported from a reciprocally movable transfer carriage 234 which is activated to move on advancing and retracting strokes by means of a carriage control cylinder 236 controlled by a solenoid actuated valve 238 (FIGS. 13 A, B, C). As indicated diagramatically on FIG. 11 the transfer platen 230 moves from a right hand starting or release position along a lower level (arrow "F") on an advancing stroke after a new stack of sliced product has been deposited on the scale platform 220 for weighing. After reaching a left hand or pickup position at the lower level and when the weighing cycle is complete, the transfer platen 230 moves upwardly (arrow "G") to lift the stack of slices from the scale platform. The platen continues on a retrack stroke (arrow "H") from the lifting or pickup position toward the right along an upper level. After the elevated stack of slices clears the right hand edge of the scale platform, the transfer platen 230 is urged downwardly from the upper level on a release or deposit stroke and the stack 46 of slices is deposited onto the upper belt runs of the transfer conveyor 240. The transfer conveyor 240 moves the weighed stacks 46 onto an upwardly sloped product accept-reject conveyor 242 of the accept-reject mechanism 51 and ultimately the weighed stacks of slices are deposited onto the discharge conveyor 52 in a position which indicates whether or not the particular stack meets the acceptable minimum weight requirement and is within an acceptable weight range. Mechanical means may be provided for removing the rejected stacks for further rework or processing while the acceptable stacks moving along the conveyor 57 are ready for further processing or packaging for market.

The weighing system 48 includes a large, heavy, base structure 246 (FIG. 1) supported independently of the main housing 164 and other components so that the weight cell 228 will be mounted on a stable solid base isolated from the vibrations of other portions of surrounding mechanism. An adjustable base assembly 248 is provided for precisely positioning the scale platform 220 and the associated weight cell 228 in order that the stacks 46 discharged from the stacker platens 192L and 192R will center on the scale. A threaded adjustable support post 250 is provided to adjust the vertical level of the upper surface of the scale platform 220 so that only a small amount of upward travel of the transfer platen 230 is required to lift or elevate a stack 46 (arrow "G") from the scale platform for lateral transfer to the conveyor 240. Moreover, if the stack weight is changed the weight cell 228 may be provided with a different tare weight and the adjustment post compen-

sates to maintain a constant level of the scale platform relative to the transfer platen.

As the fingers **232** of the transfer platen **230** move upwardly to elevate a stack of slices from the scale platform **220,** the stack may tend to jump upwardly and a stop member **252** is provided to limit upward travel of the stack during the pickup stroke. The upper stop is interconnected to reciprocating carriage **234** by suitable interconnecting structure indicated by the reference number **251.** The carriage **234** for supporting the transfer platen **230** is mounted on a pair of horizontal guide rods **256** supported at opposite ends from a main base or frame structure **258** of the transfer mechanism **50.** The carriage **234** includes a plurality of sleeves slidable on the support rods **256** so that the carriage can move back and forth between the left hand pickup position and the right hand release position. As a stack **46** of weighed slices is lifted from the scale platform **220** by the transfer platen **230** and is moved on a retract stroke toward the right, a minimum spacing is provided between the stop member **252** and the upper surfaces of the fingers **232** of the transfer platen. The stack is held against the stop member by upward pressure from the platen **230** and the stack itself limits the upward movement of the platen during the pickup and retraction strokes.

The stop **252** is adjustable vertically with respect to the upper level travelled by the transfer platen **230** in order to accommodate stacks **46** of different height or thickness. The stop is slidably supported on a rod **269** and reciprocates thereon in a horizontal direction in unison with the carriage **234.** The stop support rod **249** is mounted on a vertical adjustable frame **253** supported on a pair of threaded posts **255.** The posts extend upwardly and downwardly from a base plate **257** of the frame **258** in bosses **259** having threaded vertical apertures for the posts.

Rotation of the posts **255** in unison to maintain a level attitude of the stop **252** during vertical adjustment is achieved by two sprockets **259** on the lower end of the posts and another sprocket on a hand wheel shaft **261.** The three sprockets are drivingly interconnected by a chain **263** so that rotation of a hand wheel **265** drives the post up or down to adjust the height of the stop **252** for a particular height of stack being handled.

The carriage control cylinder **236** includes a piston rod **260** connected at its outer end to an elongated drive member **262** having a toothed rack member **264** attached to an intermediate section of the member for reciprocal movement between a pair of support bearings **266.** The teeth of the rack **262** are meshingly engaged with a pinion **268** mounted adjacent the lower end of a vertical oscillating shaft **270** supported in an upstanding bearing assembly **272.** As the piston rod **260** is advanced and retracted, the rack **264** causes the pinion shaft **270** to rotatively oscillate back and forth about its vertical axis and a radial arm **272** secured to the upper end of the pinion shaft **270** swings through an arc of approximately 180° between a forward direction (left hand position FIG. **11**) extending toward the scale platform **220** and an opposite (right hand) retracted position (not shown) extending away from the scale platform. In order to dampen oscillations of the arm **274** at the end of its arcuate swings, a dampener rod assembly **275** (FIGS. **12** and **12A**) is pivotally connected to the arm intermediate its length. The opposite end of the dampener rod assembly is connected to a fixed pivot axle **277** spaced eccentric in relation to the pivot axis of the arm **274.** The dampener rod assembly includes a rod slidable in a sleeve having a compressing spring in one end biasing the rod outwardly as shown in FIG. **12A.** The arm **274** is pivotally connected adjacent the outer end through a connector pin assembly **276** to one end of an elongated actuating rod **278** for driving the transfer platen. The transfer platen is attached to the forward end of a pair of parallel, generally horizontal side frames **280.** The side frames are interconnected with the carriage **234** at their left and right hand ends through pairs of short links **282** and **284** pivotally attached to the respective left and right ends of the carriage. The carriage **234,** the side frames **280,** and the link members **282** and **284** form a parallelogram type interconnecting linkage between the transfer platen **230** and its supporting reciprocating carriage **234.** As shown diagramatically by the parallelogram formed by the arrows "F," "G," "H" and "I" in FIG. **11,** the transfer platen **230** moves horizontally at a lower level from a right hand rest position on an advancing stroke to a left hand pause position beneath the scale platform **220** ready for pickup. The transfer platen momentarily pauses as the weighing cycle is completed and then moves upwardly on a pickup stroke (arrow"G") curving toward the right until upper travel is stopped by the compression of the stack **46** against the stop **252.** The platen continues along an upper horizontal path on a retract stroke from left to right (arrow "H") and, during this stroke, the pivot links **282** and **284** slope upwardly at a maximum angle as indicated by the dotted lines. At the end of the retraction stroke, the platen is forced downwardly by engagement of a cam roller **286** mounted on one side frame **280** with a cam **288** having a downwardly and rearwardly curved cam surface. The cam **288** is supported from the base structure **258** of the transfer mechanism **50** and engagement between the cam roller. The cam surface biases the side members **280,** which support the platen **230,** downwardly on a discharge or deposit stroke indicated by the arrow "I." As the platen **230** is cammed downwardly, the stack **46** of sliced product carried thereby is deposited on the upper run of the transfer conveyor **240** which is moving left to right (FIG. **11**). AS the platen **230** moves downwardly on the deposit or discharge stroke, the links **282** and **284** pivot in a counterclockwise direction about the lower pivot axes until the upper surface of the transfer platen **230** is below the upper level of the upper belt run of the conveyor **240.** The stack **46** is then moved to the right by the belt conveyor as indicated by the arrow "J."

The left hand end of the actuating rod **278** is pivotally connected via a spherical ball joint connector **290** to a cross member **292** (dotted lines FIG. **11**) which transversely interconnects the right hand pivot links **284** between the transfer platen **230** and the carriage **234.** With the platen **230** at the right hand position at its lower level, an advance stroke of the carriage control cylinder **236** causes the arm **274** to swing through 180° in a clockwise direction toward the position shown and this causes the connector rod **278** to advance from right to left pushing the side frames **280** in the same direction. Because the level of push is above the level of the carriage **234,** on an advancing stroke the platen **230** and carriage **234** move in unison together. Because of

the rotary movement of the arm **274**, the platen **230** accelerates slowly to a maximum value at the middle of the advancing stroke and then decelerates at a decreasing rate as it approaches the left hand position awaiting pickup of a weighed stack of slices **46** from the scale platform. The flow of fluid into the carriage control cylinder **236** is then reversed by the carriage control solenoid valve **238** to retract the rod **260** and the arm **274** is pivoted in a counterclockwise direction causing the drive **278** to be retracted toward the right. As this occurs, because the pull is exerted at a level above the carriage **234** which has greater inertia and tends to remain in its stationary position, the side frames **280** and platen **230** begin to move to the right before the carriage follows. As this occurs, the connecting links **282** and **284** pivot to an increased slope in a clockwise direction and the platen **230** moves upwardly on its pickup stroke until the stack of sliced product is in compression against the stop **252.** Compression of the stacks **46** limits the upward extent of angular pivotal movement between the links **282** and **284** and the side frame **280** and the upper level of the platen **230.** The carriage **234** then begins to follow the side frames on the retract stroke as and near the end of the stroke the engagement of the cam roller **286** engages the curved surface of the cam **288** and moves the platen downwardly to deposit the stack **46** on the upper run of the transfer conveyor **240.** A stop member **296** is provided to limit the vertical minimum spacing between the side frame **280** and the carriage **234.** The parallelogram linkage described thus provides for adjustable vertical spacing between the transfer platen **230** and the carriage **234** and for horizontal adjustment between the platen and carriage.

Referring specifically to FIGS. **11** and **12** of the drawings, the transfer conveyor **240** includes a plurality of endless belts **302** aligned in spaced apart parallel vertical planes aligned and centered with respect to the fingers **222** on the scale platform **220.** The fingers **232** of the transfer platen **230** thus are clear to move back and forth freely between the slots **224** in the scale platform and open spaces or slots **304** between left hand segments of the belts **302.** At the left hand end, (FIG. **11**) each belt is supported on an idler puller **305** mounted for rotation at the outer end of a thin finger-like support blade **306** (FIG. **11**). Intermediate the opposite ends of the belts there is provided a plurality of idler pulleys **308** mounted on a shaft **310** and separated by spools or disc-like spacers **312** which provide parallel spacing between the individual belts as indicated in the plan view of FIG. **12.** At the right hand end of the belts **302** there is provided a drive roll **314** secured to a drive axle **316** and provided with a plurality of belt grooves in its periphery, alternate ones of which receive the endless belts **302** in driving engagement therewith. The driven shaft is supported by bearings **318** and is connected to a product discharge conveyor motor **300** with a drive coupling **320.**

In accordance with the invention, the other grooves provided in the drive roll **314** between the grooves for the belts **302** are used for engagement by a plurality of endless belts **322** of the product accept-reject conveyor **242** of the mechanism **51.** As shown in FIG. **11,** the upper belt runs of the endless belts **322** move toward the right (indicated by the arrow "K") and are inclined upwardly to carry the stacks **46** to a level high enough for discharge onto the product discharge conveyor **52.**

The belts **322** may be formed of a stretchable elastic material such as rubber or the like and may be of an O-ring type conventionally used in the construction of belt conveyors. The product accept-reject conveyor **242** is adapted to have its discharge or output end shifted laterally, with a resultant stretching or contracting of the belts **322,** thereby indicating by the position of the product stacks **46** deposited on the discharge conveyor **52** whether or not a particular stack meets the desired weight range criteria. As illustrated in FIG. **12,** acceptable stacks **46** are deposited and aligned toward one side of the conveyor **52** while the rejected stacks are displaced laterally.

The discharge end of the accept-reject conveyor **242** is provided with a grooved idler roll **324** mounted on an axially shiftable shaft **326** supported between a pair of bearing assemblies **328.** As shown in FIG. **12,** the shaft **326** is biased by a coil spring **330** towards a reject alignment and as indicated by the dotted lines the runs of the belts **322** may be shifted angularly to change point of discharge into line with the opposite side of the conveyor **52.** The other end of the shaft **326** is rotatively connected to the armature **332** of the product accept-reject solenoid via a coupling **334.**

As will be described hereinafter, when an appropriate signal produced in the weighing system **48** indicates that the stack weighed on the scale platform **220** is acceptable after a time delay, the solenoid **244** is energized to pull the armature **332** inwardly thereby shifting the shaft out of the spring biased reject position to discharge the product in the position indicating acceptance. In the event that any weighed stacks **46** do not meet the minimum weight requirement or do not fall within a desired weight range, or if an equipment failure occurs such that the solenoid **244** is not energized, the stacks are discharged as rejects.

CONTROL CIRCUIT

A preferred embodiment of an electrical control circuit for the processing apparatus **20** is illustrated in FIGS. **13A,** B and C and is generally designated **1000.** The control circuit **1000** automatically coordinates and monitors the feeding, slicing, stacking, weighing, transferring and conveying functions of the apparatus **20.** In accordance with an important advantage of the present invention, the control circuit **1000** monitors the weights of each stack of meat slices **46** to determine whether the weight of each stack **46** falls within a predetermined weight range. If the weight of a stack **46** is determined to be outside of the predetermined weight range, the control circuit **1000** correspondingly adjusts the speed of the slicing mechanism **36** to cause subsequent stacks **46** to eventually come within the predetermined weight range.

For purposes of clarity and simplicity, the various direct current and alternating current power supplies utilized in the control circuit **1000** are not shown. The start and stop switching controls for the various major components of the machine **20** and of the control circuit **1000** are illustrated simply as switching controls **1100.**

The controls **1100** preferably include a main power control switch **1102** for energizing the required alternating current and direct current power supplies for the control circuit **1000** and several of the motors of the machine **20,** for example, the loader lateral conveyor motor **59,** the loader elevator motor **57** and the product

discharge conveyor motor **300.** A stacker control switch **1104** controls the energization and deenergization of a stacker motor **206** that is used to drive the movable stacker carriage **160** downward against the force of the stacker return spring **182.**

A slicer control switch **1108** is used to energize or deenergize the slicer motor **40** that is used to provide power to the slicing mechanism **36.** A feeder-retractor control switch **1112** controls the feeder-retractor motor **70.** The feeder-retractor motor **70** feeds an elongated mass of a food product **32** into the orifice **42** for slicing by the slicing mechanism **36** or retracts the elongated mass **32** from the orifice **42** to prevent further slicing by the slicing mechanism **36.**

A weight control switch **1116** provides the required alternating and direct current power to the slicer motor speed adjustment components of the electrical control circuit **1000.** A stacker clutch cut-off control switch **1118** is used to manually engage a stacker motor clutch **202.** When the stacker motor clutch **202** is energized, the movable carriage **160** of the stacking mechanism **44** is driven downwardly against the force of the return spring **182** by the stacker motor **206.** When the stacker motor clutch **202** is deenergized, the carriage **160** is returned to its uppermost position or held in place at its uppermost position by the force of the return spring **182.**

After the control circuit **1000** is energized by the controls **1100,** the desired number of slices per stack **46** and the desired weight per stack **46** are entered into the control circuit **1000.** The control circuit **1000** then automatically slices, stacks, weighs and accepts or rejects the elongated mass of the food products **32** in accordance with the desired number of slices per stack **46** and the desired stack weight. Additionally, the upper and lower limits of the desired stack weight range and a maximum underweight error limit may be entered at this time into the control circuit **1000,** as more fully discussed hereinafter.

A suitable circuit for monitoring the number of slices sliced by the slicing mechanism **36** and for discharging or dumping a stack of slices **46** after the predetermined number of slices have been accumulated is generally designated as **1200.** The circuit **1200** includes a presettable slice counter **1202** that is preset to the desired number of slices per stack of the food product, which may vary from two to 30 slices or more per stack. The counter **1202** counts down in response to pulses from a transducer **1204.** The transducer **1204** converts the rotary motion of the slicing mechanism shaft **38** into electrical input signals to the counter **1202.** The transducer **1204** includes a pick-up coil **1208** for receiving pulses induced by the passage of a permanent magnet **1210** thereby. The permanent magnet **1210** preferably induces one pulse in the coil **1208** for each revoluation of the shaft **38.** Since for each revolution of the shaft **38,** a slice is cut from the elongated mass of a food product **32,** the input pulses from the transducer **1204** to the counter **1202** correspond to the number of slices cut by the slicing mechanism **36.** Many other suitable signaling devices could be used in place of the pick-up coil **1208,** one example of which is a reed switch.

The counter **1202** counts down in response to input pulses from the transducer **1204** until the number of input pulses from the transducer **1204** equals the preset number of slices. The counting down of the counter **1202** may be inhibited during the initial start-up period of the processing apparatus **20** by a start-up inhibit control **1212.** The inhibit control **1212** provides an input signal to the counter **1202** to prevent the counter **1202** from counting down until that input signal is removed. The input signal from the inhibit control **1212** to the counter **1202** is removed in response to the detection of a mass of a food product **32** in the path of the slicing mechanism **36** as sensed by a suitably disposed limit switch **1214.** The closure of the limit switch **1214** deactivates the inhibit control **1212** to remove the inhibit input signal from the counter **1202.**

Alternately, a photoelectric cell could be used in place of the limit switch **1214.** In a further alternate embodiment, the inhibit control **1212** may be disgarded and the counter **1202** permitted to count down beginning with the energization of the slicer motor **40** and thereby most probably resulting in the rejection of the first processed stack of slices **46** as being underweight.

When the number of input pulses from the transducer **1204** equals the preset number of slices, the counter **1202** reaches coincidence and generates an output pulse to a bistable multivibrator or flip-flop **1216** which is thereby switched to its second of two states. In response to its being switched to its second state, the bistable multivibrator **1216** provides an output signal to a reset time delay **1218,** a stacker clutch control **1220** and a time delay **1222.** The reset time delay **1218** delays the output pulse from the bistable multivibrator **1216** for a very brief period of time and then directs that output pulse back to the counter **1202** and the bistable multivibrator **1216** to reset the counter **1202** to its preselected slice count and the bistable multivibrator **1216** to its first of two states.

The output pulse from the bistable multivibrator **1216** to the stacker clutch control **1220** deenergizes the clutch **202** to prevent the stacker carriage **160** from being further driven in a downward direction by the stacker motor **206** and to permit the carriage **160** to be returned to its initial position by the force of the return spring **182.** The stacker clutch control **1220** may alternately deenergize the clutch **202** in response to signals received from either the start-up inhibit control **1212** or the stacker clutch cut-off control switch **1118.** The time delay **1222** prevents the right and left platens or paddles **192R** and **192L** from depositing a stack of slices **46** at the weighing mechanism **48** before the carriage **160** has reached its lowermost point of travel.

After being delayed by the time delay **1222,** the output pulse from the bistable multivibrator **1216** switches a bistable multivibrator or flip-flop **1224** to its second of two states. As a result of being switched to its second of two states, the bistable multivibrator **1224** provides an input signal to a pulse generator **1226** which immediately generates output pulses at a preselectable frequency of, for example, **125** to **225** pulses per second. The output pulses from the pulse generator **1226** are directed through a triple pole, triple throw switch **1228** to a paddle stepper control **1230.** In response to each input pulse, the paddle stepper control **1230** pulses both a right paddle stepper driver **1232** and a left paddle stepper driver **1234.**

In response to each input pulse from the paddle stepper control **1230,** the right paddle stepper driver **1232** energizes a right stepper motor **187** to rotate the right platen or paddle **192R** fifteen degrees. Similarly, for each input pulse from the paddle stepper control **1230,**

the left paddle stepper driver **1234** energizes a left stepper motor **186** to rotate the left platen or paddle **192L** fifteen degrees.

The output pulses from the pulse generator **1226** are further directed to a pulse counter **1240** which is preset to provide an output coincidence pulse after receiving eight input pulses. The pulse counter **1240** arrives at coincidence after receiving eight input pulses from the pulse generator **1226** and at that time resets itself and provides an output pulse to reset the bistable multivibrator **1224** to its first of two states, to deenergize the pulse generator **1226** and to energize a reverse pulse generator **1242.** The reverse pulse generator **1242** provides an oppositely directed pulse on the trailing end of each eighth consecutive pulse from the pulse generator **1226.** This oppositely directed pulse is directed to the paddle stepper control **1230** and through the stepper drivers **1232** and **1234** and causes a braking effect on the right stepper motor **187** and the left stepper motor **186** to prevent the right and left platens or paddles **192R** and **192L** from rotating more than 120°.

Since the stacking mechanism **44** includes three sets of platens or paddles radially disposed **120** degrees apart, rotating one set of platens or paddles **120** degrees causes that set to move out of a substantially horizontal position and past a true vertical position to thereby discharge or transfer a stack of slices **46** to the weighing mechanism **48.** Further, the rotation of one set of platens or paddles **120** degrees from a substantially horizontal position brings a second set of platens or paddles into that position for receipt of the next stack of slices **46.**

Either the right platen or paddle **192R** or the left platen or paddle **192L** may be rotated **15** degrees in response to each closure of a manual stepper switch **1244.** The stepper switch **1244** is, preferably, ganged with the triple pole, triple throw switch **1228** to enable their contacts to be moved by a single control switch **1245** on a main control panel (not shown). Thus, the switch **1245** may be turned from an at rest position to one of two alternate positions, one position being a right platen or paddle step and the other position being a left platen or paddle step. When the switch **1245** is turned to step the right platen or paddle **192R,** the stepper switch **1244** is closed and the poles of the switch **1228** are moved to the upper contacts **1246.** This results in a pulse being applied to the paddle stepper control **1230** which in turn energizes the right paddle stepper driver **1232** and the left paddle stepper driver **1234.** With the poles of the switch **1228** in contact with the contacts **1246,** only the right paddle stepper driver **1232** is able to energize the right stepper motor **187** to rotate the right platen or paddle **192R** one step or **15** degrees. When the switch **1245** is released, the poles of the switch **1228** are returned by a spring mechanism **1248** to their central position in contact with the contacts **1250.**

When the switch **1245** is turned to step the left platen or paddle **192L,** the switch **1244** is again closed and the poles of the switch **1228** are moved into contact with the contacts **1252.** In such a position, only the left paddle stepper driver **1234** is able after energization by the paddle stepper control **1230** to energize the left stepper motor **186** to rotate the left platen or paddle **192L** one step or 15°.

After a stack of slices **46** is deposited on the weighing mechanism **48,** a control circuit **1300** determines the weight of the stack of slices **46** and the amount of deviation from the preselected weight. The control circuit **1300** in a preferred embodiment includes a linear voltage differential transformer **1302** for determining the error, if any, in the weight of a stack of slices **46** from the preselected weight.

A typical linear voltage differential transformer **1302** includes a primary coil and a pair of linearly disposed, oppositely poled secondary coils connected together. An alternating current input signal to the primary of the transformer **1302** from an oscillator **1304** is coupled through the magnetic core of the transformer **1302** to one or both of the secondary coils of the transformer **1302.** Preferably, the magnetic core of the transformer **1302** is movable and connected to the movable scale platform **220.** In its uppermost position, the magnetic core preferably induces all of the voltage from the primary coil into a first one of the two linearly disposed secondary coils. In its lowermost position, the magnetic coil preferably induces all of the voltage from the primary coil of the transformer **1302** into the second one of the linearly disposed, oppositely poled secondary coils. Since the secondary coils are oppositely poled, a signal from one of the secondary coils will be opposite in phase from the input signal to the primary of the transformer **1302.** In its center position, the movable core would ideally induce an equal voltage into each of the secondary coils which would result in the voltage from each of the secondary coils cancelling the other voltage out. Thus, a xero voltage output would be obtained from the differential transformer **1302.**

The linear voltage differential transformer **1302** could either be used to obtain the total weight of a stack of slices **46** or could be preadjusted to determine merely the error between the weight of the stack of slices **46** and the preselected weight. The output signal from the linear voltage differential transformer **1302** is directed to an alternating current to direct current (AC/DC) convertor **1306** which converts the in-phase or the out-of-phase alternating current voltage error signal from the linear voltage differential transformer **1302** to a positive or a negative direct current output voltage proportional to the magnitude of the input error signal.

If the linear voltage differential transformer **1302** is used to measure the total weight of a stack of slices **46,** the output signal from the converter **1306** is applied to the input of a presettable analog error detector **1308.** The error detector **1308** is presettable to a desired stack weight, for example, from 2 to 32 ounces per stack, to, in one embodiment set an internal voltage level for comparing the input signal from the convertor **1306.** Thus, the analog error detector **1308** may include a differential amplifier. Preferably, the error detector **1308** further includes a comparator circuit and an inhibit circuit to prevent errors of a predetermined magnitude from changing the speed of the slicer motor **40.** For example, if a desired weight of a stack of slices **46** is 8.25 ounces, a weight range of from 8.00 to 8.50 ounces may be selected as an acceptable weight range. Since occasionally air pockets, fat pockets or liquid pockets are found in an elongated mass of a food product **32,** a rather large deviation from the desired weight of a stack **46** may occur. Thus, a presettable lower limit of 7.5 ounces may be adopted and entered into the presettable analog error detector **1308** to prevent an error signal indicating a stack of slices **46** having a weight less

than 7.5 ounces from changing the speed of the slicer motor 40. A suitable inhibit circuit for performing this function may include an AND gate circuit having an input from the comparator circuit and another input to receive the error signal. The AND gate circuit would preferably be of the type that would provide an output analog signal proportional to the input analog error signal if the error signal is below the preset maximum limit as determined by the comparator circuit.

The detector 1308 provides an output signal indicating that the weight of a stack of slices 46 is either heavier than or lighter than the preset desired weight to an error signal display amplifier 1400 for display by a digital display device 1500. The error in a weighed stack of slices 46 may be displayed by the digital display device 1500 in ounces of deviation from the preset desired weight.

The error signal from the detector 1308 is further directed to an error correction circuit 1600. The error correction circuit 1600 includes a presettable percent error correction control 1602. The control 1602 may be preset to utilize only a fractional portion of the incoming error signal from the circuit 1300. For example, the control 1602 may be preset to provide an output that represents only 25 percent of the incoming error signal.

The output of the control 1602 is directed to a constant time/variable amplitude to variable time/constant amplitude pulse converter 1604. The pulse convertor 1604 is conventional, per se, and changes the constant time, variable amplitude error signal from the control 1602 to a constant amplitude, variable time output pulse.

Many different transistor or electrical hardware circuits may be utilized to achieve the transformation of the pulse convertor 1604. For example, one circuit may include a ramp or sawtooth voltage wave generator 1605 initiated by the leading edge of the error signal from the control 1602 and terminated when the voltage level of the ramp or sawtooth generated signals equals the level of the input error signal. The coincidence or equality of the level of the ramp or sawtooth voltage wave generated to the amplitude of the input error signal could be determined by a comparator or by a differential amplifier. When coincidence is reached, the comparator deenergized the ramp or sawtooth generator 1605. Preferably, the generator 1605 is used to energize and deenergize a constant voltage source for providing an output constant voltage pulse during a time that the generator 1605 is operative. Alternately, for some embodiments, a pulse generator could be utilized to provide a variable number of output pulses depending upon the magnitude of the amplitude of the input error signal.

The variable time, constant amplitude output pulse from the pulse convertor 1604 is directed to a heavy/light/inhibit control switch 1606. The control switch 1606 controls the operation of two NAND gates 6108 and 1610. One output of the control switch 1606 provides a high positive voltage signal to one of the two inputs of each of the NAND gates 6108 and 1610.

If the weight of a stack of slices 46 is less than the preselected desired weight as determined by the circuit 1300, a "light" error signal at the input of the control switch 1606 causes a high positive output voltage pulse from the control switch 1606 having the same pulse width as the input pulse to the control switch 1606 from the pulse convertor 1604 to be applied to the second of the two inputs of the NAND gate 1610. Since the output of a NAND gate assumes a low or ground potential only when all of the inputs to the NAND gate are of a high positive potential, providing a high positive voltage on both of the inputs to the NAND gate 1610 drives the output of the NAND gate 1610 to a low or ground potential which in turn is directed to a "light" input of a potentiometer motor control 1612.

Similarly, if the weight of a stack of slices 46 is greater than the preselected desired weight, the resulting "heavy" error signal from the circuit 1300 is directed to the control switch 1606 to cause the control switch 1606 to apply a high positive voltage to the second of the two inputs of the NAND gate 1608. The pulse width or time of this high positive voltage pulse is identical to the pulse width or time of the input error pulse to the control switch 1606 from the pulse convertor 1604. Since both of the inputs to the NAND gate 1608 are of a high voltage level, the output of the NAND gate 1608 is driven to a low or ground potential which in turn is applied to a "heavy" input of the potentiometer motor control 1612.

An end-of-loaf inhibit control 1614 detects the end of an elongated mass of a food product 32 as it is being fed into the path of the slicing mechanism 36 to inhibit the control switch 1606 and thereby remove the high positive voltage level applied to the first input of each of the NAND gates 1608 and 1610. By removing the high positive voltage level from each of the outputs of the NAND gates 1608 and 1610 is maintained at a high positive voltage level to prevent the potentiometer motor control 1612 from responding to an error signal. Thus, the speed of the slicer motor 40 is not affected by an error in weight caused by an end of an elongated mass of a food product 32. The inhibit control 1614 could also be used in conjunction with the analog error detector 1308 in inhibiting an error of an undesired magnitude from affecting the speed of the slicer motor 40.

The potentiometer motor control 1612 controls a motorized potentiometer 1615 which includes a motor 1618 for moving a wiper arm of the error control signal generator or potentiometer 1620. The motor 1618 drives the movable arm of the generator 1620 in a first direction in response to a "heavy" command from the potentiometer motor control 1612 and in a second direction in response to a "light" command from the potentiometer motor control 1612. The motor 1618 is energized to move the movable arm of the generator 1620 for a period of time corresponding to the pulse width of the output pulse from the pulse convertor 1604. A "trend light" lamp 1622 or a "trend heavy" lamp 1624 is illuminated depending upon which side of a null position the movable arm of the generator 1620 is at a particular time. The lamps 1622 and 1624 indicate to an operator of the processing machine 20 whether the weight of the stacks 46 being processed at that time are less than or lighter than the desired stack weight or greater than or heavier than the desired stack weight. A manual trend override circuit 1626 including a pair of switches 1628 is provided to enable an operator to more rapidly increase or decrease the speed of the slicer motor 40.

The error control signal generator 1620 provides an output error control signal to a motor control circuit 1700. The motor control circuit 1700 includes a slicer

motor control **1702**, a feeder-retractor motor control **1704**, and a stacker motor control **1706**. The motor controls **1702, 1704,** and **1706** respectively control the energization of and the operational speed of the slicer motor **40**, the feeder-retractor motor **70**, and the stacker motor **206**. The initial operating speeds of the motors **40, 70,** and **206** are set by a plurality of potentiometers **1708**. The potentiometers for setting the initial operating conditions of the feeder-retractor motor **70** and the stacker motor **206** are ganged together to coordinate the movement of the movable stacker carriage **160** with the rate of the feeder **34**. The motor controls **1702, 1704,** and **1706** are preferably commercially available servo-amplifiers or variable frequency feedback control units available from any one of a number of manufacturers. The motor controls **1702, 1704,** and **1706** may be obtained as an integral servo-amplifier unit from the Hyper-Loop, Inc. of Bridgeview, Illinois, by reference to the model number HLI **1008**. The Hyper-Loop device is further disclosed in U.S. Pat. No. 3,548,278.

After its initial operating speed is set by the potentiometer **1708**, the speed of the slicer motor **40** may be increased or decreased by the slicer motor control **1702** in response to an error control input signal from the error control signal generator **1620**. A plurality of tachometers **1710** monitor the actual operating speed of the motors **40, 70,** and **206** and provide a feedback signal, respectively, to the controls **1702, 1704,** and **1706** to thereby closely control the actual operating speed of these three motors. A potentiometer **1712** connected in parallel with the slicer motor tachometer **1710** enables the number of slices per minute being sliced by the slicing mechanism **36** to be visually displayed by the digital display **1500**. Similarly, a potentiometer **1714** enables the feeding rate of the feeding mechanism **34** to be visually displayed in inches per minute by the digital display **1500**.

In order to transfer a stack of slices from the weighing mechanism **48** to the product discharge conveyor **52**, a transfer mechanism **50** is utilized under the control of a transfer mechanism control circuit **1800**. The transfer mechanism control circuit **1800** includes a variable time delay **1802** to enable the stack of slices **46** deposited by the stacking mechanism **44** on the weighing mechanism **48** to settle to achieve an accurate reading. The time delay **1802** delays the output pulse from the time delay **1222** from energizing a sample timer **1804**. The actual time delay of the variable time delay **1802** may be varied depending upon the preselected number of slices per stack to be formed by the slicing mechanism **36**. For example, time delays of **2400** milliseconds for two through seven slices, 360 milliseconds for eight through 12 slices, and 540 milliseconds for 13 through 29 slices have been found acceptable. The actual time delay of the variable time delay **1802** may be set by entering the desired number of slices per stack into the presettable slice counter **1202**.

An additional time delay **1806** is provided to allow the stacking mechanism **44** to deposit a stack of slices **46** on the weighing mechanism. The time delay **1806** provides a suitable delay of, for example, 120 milliseconds, before energizing a transfer advance solenoid control **1808** in response to the delayed output pulse from the time delay **1222**. The transfer advance solenoid control **1808** causes the transfer mechanism **50** to advance to the weighing mechanism **48** and to there underlie a stack of slices **46** in a nonengaging position.

After the time period of the time delay **1802** expires, the sample timer **1804** is energized to enable the presettable percent error correction contol **1602** to provide an input error pulse to the pulse convertor **1604** of a constant pulse width or time. For example, the sample timer **1804** may be set at **100** milliseconds to provide an input error pulse to the pulse convertor **1604** from the control **1602** of a pulse width or time or exactly **100** milliseconds.

After expiration of its time period, the sample timer **1804** energizes a transfer retract solenoid control **1810** to engage the stack of slices **46** on the weighing mechanism **48**, to transfer the stack of slices **46** to the product accept-reject mechanism **51**, and to deposit the stack of slices **46** on the transfer conveyor **240**. The solenoid controls **1808** and **1810** energize or deenergize a pair of solenoids that are used to control the pneumatic valve **238**. The valve **238** in turn controls the transfer carriage control cylinder **236** which through various linkages controls the reciprocating movements of the transfer mechanism **50**.

The transfer advance solenoid control **1808** energizes one of two solenoids controlling the position of the pneumatic valve **238** for operating the transfer carriage control cylinder **236** to advance the transfer carriage **234** to the weighing mechanism **48**. At the weighing mechanism **48**, the transfer carriage **234** maintains a nonengaged, underlying relationship with respect to the stack of slices **46** being weighed by the weight cell **228**.

After the expiration of the time period of the sample timer **1804**, the transfer return solenoid control **1810** is pulsed to energize the second of the two solenoids controlling the position of the pneumatic valve **238** to cause the transfer of the carriage control cylinder **236** to move the transfer carriage **234** along its return stroke. The return stroke of the transfer carriage **234** includes a pick-up step in which the weighed stack of slices **46** is removed from the scale platform **220**, a retract step in which the transfer carriage **234** is retracted from the weighing mechanism **48** to a position overlying the transfer conveyor **240**, and a deposit step in which the transfer carriage **234** is returned to its at rest position below the transfer conveyor. During the deposit step, the stack of slices **46** is deposited on the transfer conveyor **240** for delivery to the product accept-reject conveyor **242**.

A product accept-reject control circuit **1900** controls the placement of a weighed stack of slices **46** on the acceptance path of the product discharge conveyor **52** or on the rejection path of the product discharge conveyor **52**. The control circuit **1900** includes a presettable "light" reject control **1902** and a similar presettable "heavy" reject control **1904**. As part of the initial setting up of the processing machine **20**, the acceptance weight range for a stack of slices **46** is programmed into the control circuit **1000**. A lower weight range limit is entered into the control **1902** and an upper weight range limit is entered into the control **1904**. The controls **1902** and **1904** may consist each of either a conventional potentiometer or comparator circuit.

The controls **1902** and **1904** control a NOR gate **1906**, the output of which controls the energization or deenergization of a relay **1908**. The output of the NOR

gate **1906** assumes a high positive voltage level only when both of its inputs from the controls **1902** and **1904** are at a low or ground potential. A plurality of inventing amplifiers **1910** inverts the output signals from the controls **1902** and **1904** and the NOR gate **1906** to controllably energize or deenergize a plurality of indicating lamps **1912.**

Both inputs to the NOR gate **1906** from the controls **1902** and **1904** assume a low or ground potential only when the weight of a stack of slices **46** is within the preset acceptable weight range. If the weight of a stack of slices **46** is within the predetermined acceptable weight range both of the inputs to the NOR gate **1906** assume a low or ground potential thereby driving the output of the NOR gate **1906** to a high positive voltage level. This high positive voltage level on the output of the NOR GATE **1906** is inverted by the amplifier **1910** to a low or ground potential at the output of the inverter **1910.** This low or ground potential enables a current to flow through and thereby light the "accept" lamp **1912.**

This low or ground potential at the output of the inverting amplifier **1910** also energizes the relay **1908** to thereby pulse a timed product accept solenoid control **1914.** When energized, the timed product accept solenoid control **1914** energizes the product accept-reject solenoid **244** to move the shaft **326** of the product accept-reject conveyor **242** against the force of the biasing spring **330** to deposit a weighed stack of slices **46** along the acceptance path of the product discharge conveyor **52.** After discharge of the weighed stack of slices **46** along the acceptance path of the product discharge conveyor **52,** the product accept-reject conveyor, after the deenergization of the solenoid **244** by the control **1914,** is returned to its normal position in alignment with the rejection path of the product discharge conveyor **52** by the spring **330.**

If the weight of a stack of slices **46** is less than the lower limit of the present acceptable weight range, the output of the control **1902** is maintained at a relatively high positive voltage level which after inversion by the amplifier **1910** causes the "light" reject lamp **1912** to light and further prevents the energization of the relay **1908.** Since the timed product accept solenoid control **1914** is not energized, the product accept-reject solenoid **244** is not energized and the underweight stack of slices **46** is delivered by the conveyor **242** to the rejection path of the product discharge conveyor **52.**

Similarly, if the weight of a stack of slices **46** is greater than the upper limit of the preset weight range, the output of the control **1904** is maintained at a relatively high positive voltage level to light the "heavy" reject lamp **1912** after inversion by the amplifier **1910** and to also maintain the relay **1908** deenergized. Since the relay **1908** is deenergized, the product accept-reject solenoid **244** is not energized by the solenoid control **1914** thereby causing the overweight stack of slices **46** to be delivered by the product accept-reject conveyor **242** to the discharge path of the product discharge conveyor **52.**

Obviously, many modifications and variations are possible in light of the above disclosure. Thus, it is to be understood that, within the scope of the appended claims, the invention may be practiced otherwise and as specifically described.

What is claimed and desired to be secured by Letters Patent of the United States is:

1. Apparatus for classifying successive groups of sliced food product comprising weighing means for producing signals responsive to the weight of successive groups, a conveyor having a receiving portion and a discharging portion, said discharging portion being movable between a first and a second position and including one or more endless bands trained over a roll, means for transferring successive groups from said weighing means to the receiving portion of said conveyor, and means for axially shifting said roll for moving said discharging portion of said conveyor between said first and second positions in response to selected ones of said signals.

2. The apparatus of claim **1** wherein said conveyor has conveying and returning runs and comprises endless parallel elastic bands entrained over parallel roll means at opposite ends of said runs of said conveyor.

3. The apparatus of claim **1** wherein said shifting means includes means for resiliently biasing said discharging portion toward said first position.

4. The apparatus of claim **3** wherein said shifting means includes means for moving said discharging portion of said conveyor against the force of said biasing means toward said second position.

5. The apparatus of claim **4** wherein said selected ones of said signals correspond to a weight value as measured by said weighing means of a group of slices weighing at or above a selected minimum level.

6. The apparatus of claim **1** wherein said weighing means comprises means for producing an error signal in response to a difference between a measured weight of a group of slices and a selected reference weight.

* * * * *

PO-1050
(5/69)

UNITED STATES PATENT OFFICE
CERTIFICATE OF CORRECTION

Patent No. 3,823,821 Dated

Inventor(s)

It is certified that error appears in the above-identified patent and that said Letters Patent are hereby corrected as shown below:

Change the title to read APPARATUS FOR CLASSIFYING STACKS OF SLICED MATERIAL

Replace the abstract with the following:

Apparatus for classifying successive stacks of sliced material in response to weight characteristics of the stacks includes means for producing signals responsive to the weight of said stacks, a conveyor having a discharge portion movable between first and second discharging positions and means responsive to said signals for shifting said conveyor discharge portion between said first and second positions dependent on the measured weight of a stack of slices.

PO-1050
(5/69)

UNITED STATES PATENT OFFICE
CERTIFICATE OF CORRECTION

Patent No. 3,823,821 Dated July 16, 1974

Inventor(s) Gary L. Wallace

It is certified that error appears in the above-identified patent and that said Letters Patent are hereby corrected as shown below:

Col. 1, line 2, Delete "method and"

Col. 1, line 40, Delete "method and"

Col. 1, line 44, Delete "method and"

Col. 1, Cancel lines 57 through 66

Col. 2, Cancel lines 1 through 50

Col. 3, Cancel lines 13 through 22

Col. 3, Cancel lines 33 through 52

Col. 4, Cancel lines 13 through 33

Col. 4, line 67, Delete "means for feeding the loaves"

Col. 5, Cancel lines 1 through 6

Col. 5, line 7, After "weight" insert --of the stacks of slices--

Col. 5, line 8, Delete "thereof"

Col. 5, line 65, After "11" insert --b--

Col. 6, line 8, Delete "20"

UNITED STATES PATENT OFFICE
CERTIFICATE OF CORRECTION

Patent No. 3,823,821 Dated July 16, 1974

Inventor(s) Gary L. Wallace

It is certified that error appears in the above-identified patent and that said Letters Patent are hereby corrected as shown below:

Col. 6, line 13, Delete "system" and insert --apparatus--

Col. 6, line 25, Delete "37"

Col. 13, line 33, Delete "224"

Col. 13, line 31, After "11" insert --a--

Col. 13, line 35, Delete "226"

Col. 14, line 2, After "11" insert --a--

Col. 14, line 13, After "11" insert --a and 11b--

Col. 14, line 20, After "11" insert --a--

Col. 14, line 46, Delete "57" and insert --52--

Col. 15, line 61, After "11" insert --a--

Col. 15, line 66, Delete "FIGS. 12 and 12A" and insert --FIGS. 12a and 12b--

Col. 16, line 21, After "11" insert --a--

Col. 16, line 46, After "11" insert --a--

Col. 16, line 56, After "11" insert --a--

UNITED STATES PATENT OFFICE
CERTIFICATE OF CORRECTION

Patent No. 3,823,821 Dated July 16, 1974

Inventor(s) Gary L. Wallace

It is certified that error appears in the above-identified patent and that said Letters Patent are hereby corrected as shown below:

Col. 17, line 35, Delete "11 and 12" and insert --11a and 11b, 12a and 12b--

Col. 17, line 41, Delete "224"

Col. 17, line 43, After "11" insert --a--

Col. 17, line 46, Delete "(FIG. 11)"

Col. 17, line 51, After "12" insert --b--

Col. 17, line 63, After "11" insert --a--

Col. 18, line 11, After "12" insert --b--

Col. 18, line 17, After "12" insert --b--

Col. 18, line 40, Delete "20"

Col. 18, line 44, Delete "20"

Col. 18, line 52, Delete "mechanism" and insert --knife--

Col. 18, line 60, Delete "20"

Col. 18, line 66, Delete "20"

Col. 19, lines 12, 14, 41 and 60, Delete "mechanism" and insert --knife--

PO-1050
(5/69)

UNITED STATES PATENT OFFICE
CERTIFICATE OF CORRECTION

Patent No. 3,823,821 Dated July 16, 1974

Inventor(s) Gary L. Wallace

It is certified that error appears in the above-identified patent and that said Letters Patent are hereby corrected as shown below:

Col. 20, line 1, Delete "20"

Col. 20, line 8, Delete "mechanism" and insert --knife--

Col. 24, line 26, Delete "mechanism" and insert --knife--

Col. 24, line 57, Delete "20"

Col. 26, line 58, Delete "20"

Signed and sealed this 11th day of March 1975.

(SEAL)
Attest:

RUTH C. MASON
Attesting Officer

C. MARSHALL DANN
Commissioner of Patents
and Trademarks