# United States Patent [19]

**Ellermeier**

[11] **Des. 260,894**

[45] ** **Sep. 22, 1981**


[54] **TELEVISION CAMERA**


[75] Inventor: **Konrad Ellermeier,** Valkenswaard, Netherlands

[73] Assignee: **U.S. Philips Corporation,** New York, N.Y.



[**] Term: **14 Years**

[21] Appl. No.: **895,931**

[22] Filed: **Apr. 13, 1978**

[30] **Foreign Application Priority Data**

Oct. 17, 1977 [XB] Benelux ..... 52225-00

[51] **Int. Cl.** ..... **D14—03**

[52] **U.S. Cl.** ..... **D14/78**

[58] **Field of Search** ..... D14/78; D16/1-10



[56] **References Cited**

U.S. PATENT DOCUMENTS

| | | | |
|---|---|---|---|
| D. 136,971 | 1/1944 | Cunningham | D16/3 |
| D. 223,410 | 4/1972 | Larson | D14/78 |
| D. 244,933 | 7/1977 | Yatabe | D16/4 |
| 3,242,840 | 3/1966 | Kremp et al. | D16/4 |

OTHER PUBLICATIONS

*Form,* 1-76, p. 43.



*Primary Examiner*—Jane E. Corrigan
*Attorney, Agent, or Firm*—Thomas A. Briody; William J. Streeter; Rolf E. Schneider


[57] **CLAIM**

The ornamental design for a television camera, as shown.

**DESCRIPTION**

FIG. **1** is a front, top and right side perspective view of a television camera showing my new design;
FIG. **2** is a right side elevational view thereof;
FIG. **3** is a left side elevational view thereof;
FIG. **4** is a front elevational view thereof;
FIG. **5** is a rear elevational view thereof;
FIG. **6** is a top plan view thereof; and
FIG. **7** is a bottom plan view thereof.

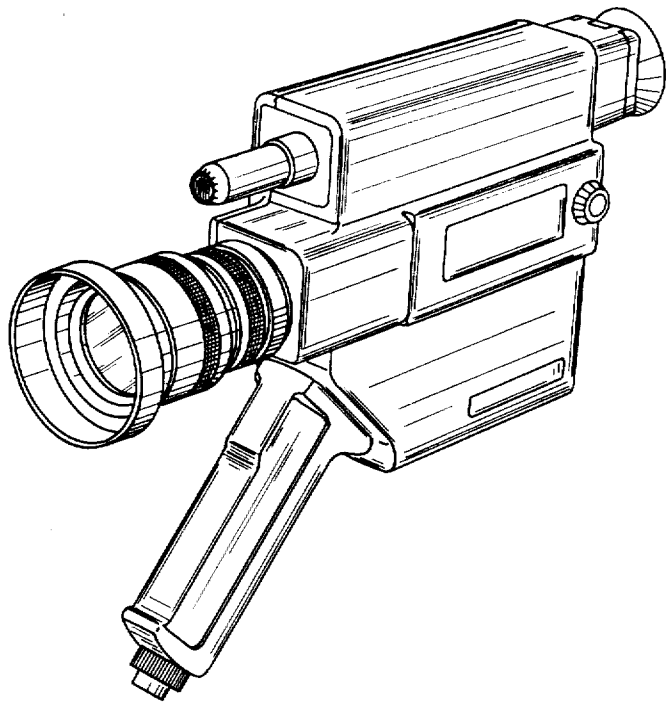

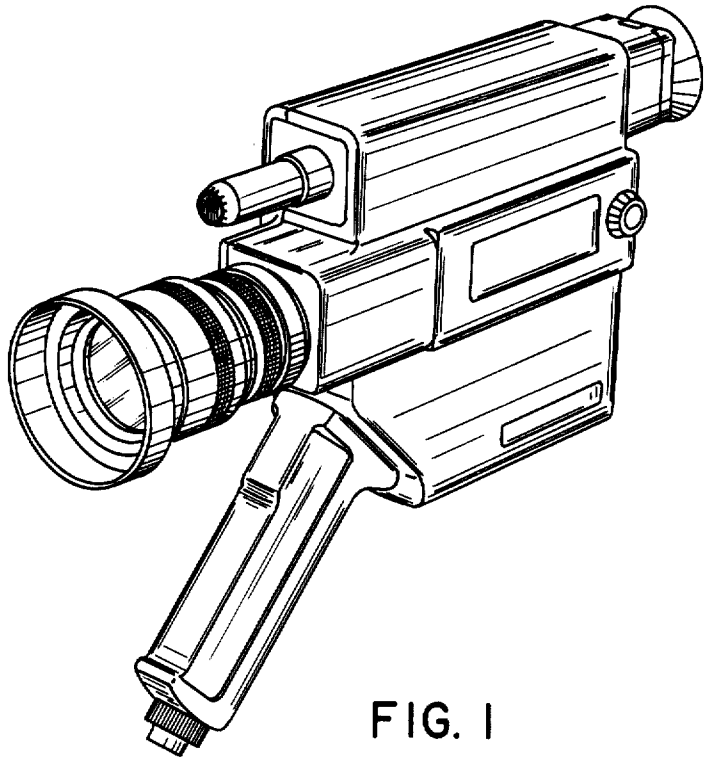

FIG. 1

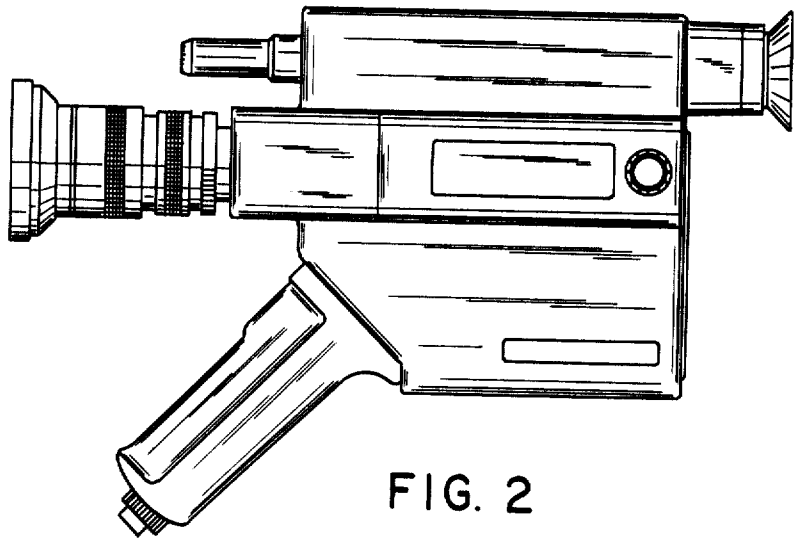

FIG. 2

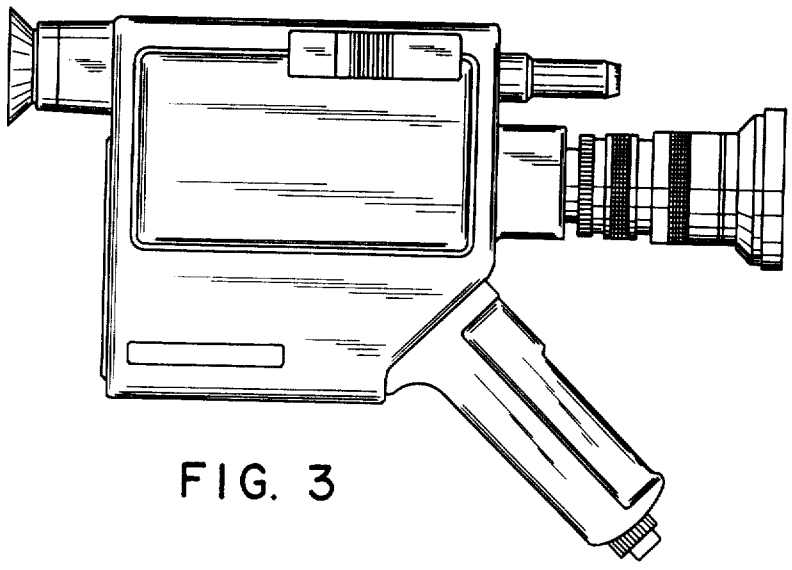

FIG. 3

FIG. 4

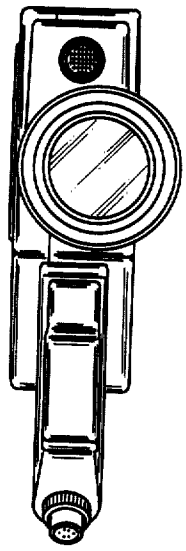

FIG. 5

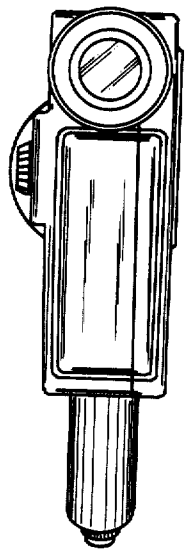

FIG. 6

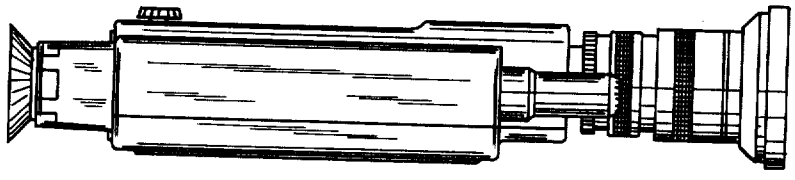

FIG. 7

