United States Patent [19]

Sargeant

[11] **3,885,119**

[45] **May 20, 1975**

[54] **APPARATUS FOR AGGLOMERATING AND/OR DRYING AND STERILIZING PARTICULATE MATERIAL**

[76] Inventor: **Ralph G. Sargeant,** 408 W. Windsor St., Lakeland, Fla. 33803

[22] Filed: **Apr. 18, 1974**

[21] Appl. No.: **461,963**

[52] **U.S. Cl.** ... **219/10.81;** 198/220 BA; 209/127 B; 219/10.69

[51] **Int. Cl.** **H05b 9/04**

[58] **Field of Search**..... 219/10.81, 10.69, 10.73, 219/10.71, 10.55 A; 209/127 B, 127 A, 127 C; 198/220 BA, 220 DC

[56] **References Cited**

UNITED STATES PATENTS

1,355,477	10/1920	Howell	209/127 C
2,031,086	2/1936	Woodruff et al.	198/220
2,476,283	7/1949	Castellan	219/10.81 X
3,537,185	11/1970	Ingram	219/10.81 X

Primary Examiner—Bruce A. Reynolds
Attorney, Agent, or Firm—Roylance, Abrams, Berdo & Kaul

[57] **ABSTRACT**

Apparatus for agglomerating and/or drying and sterilizing particulate material, comprising a vibratory conveyor arranged to convey the particulate material between two electrodes of a radio frequency treatment device capable of heating the moisture contained by the particles while the particles are being agitated in such fashion that they are only in transient contact with parts of the apparatus and with each other as they are treated. The apparatus is particularly useful for treating particulate materials, such as dehydrated citrus juice and gunpowder, which are specially sensitive to heat.

10 Claims, 5 Drawing Figures

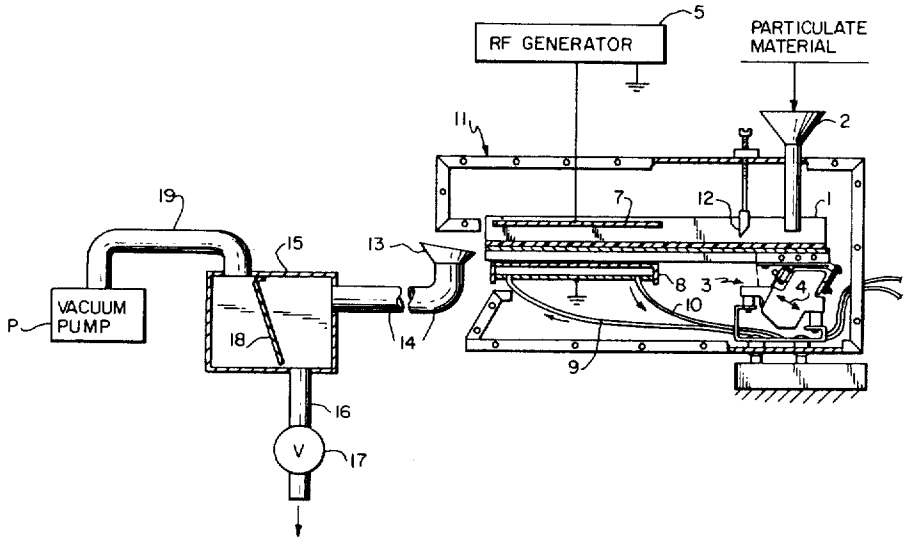

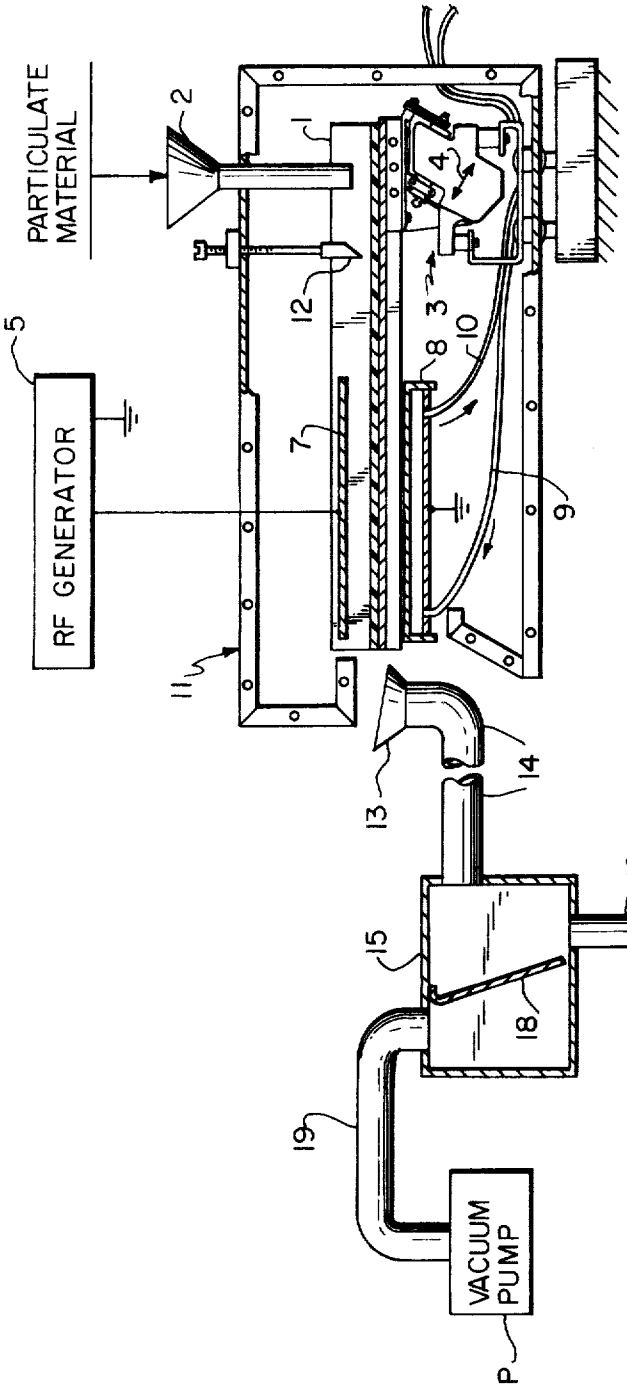
PARTICULATE MATERIAL
RF GENERATOR
VACUUM PUMP
P
1
2
3
4
5
7
8
9
10
11
12
13
14
15
16
17
18
19

FIG. 1

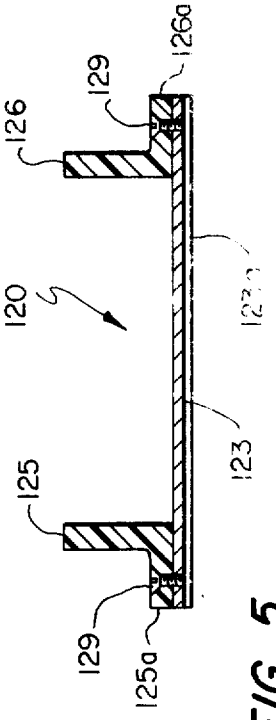
120
123
125
125a
126
126a
129

FIG. 5

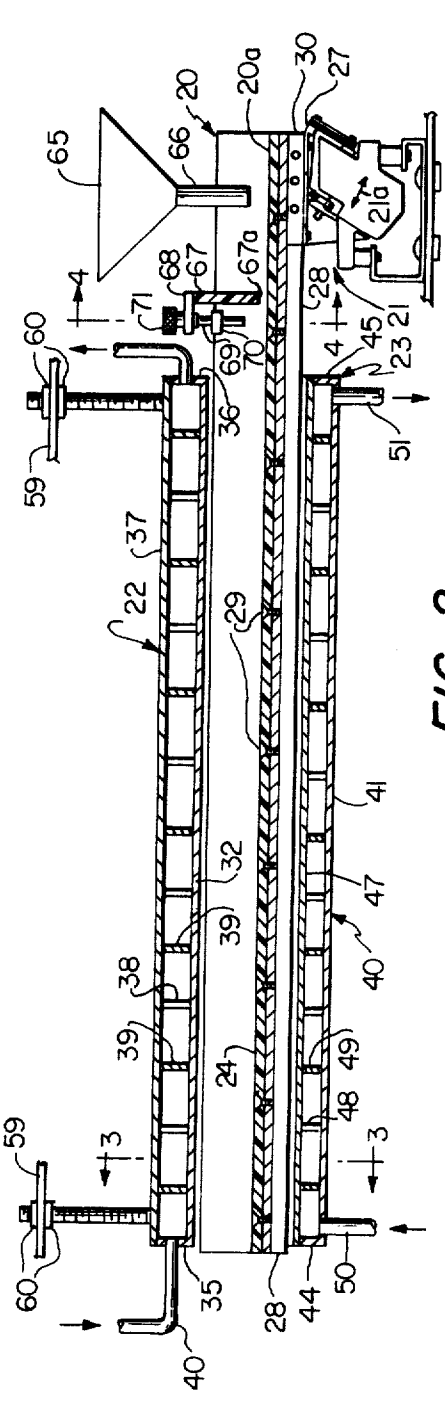

FIG. 2

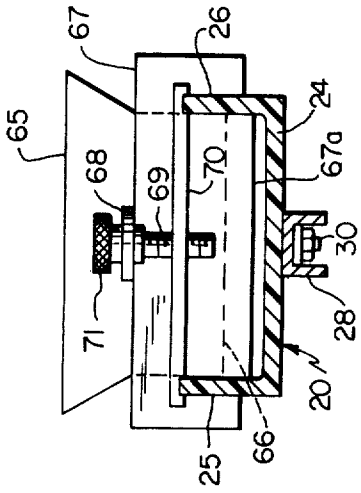

FIG. 4

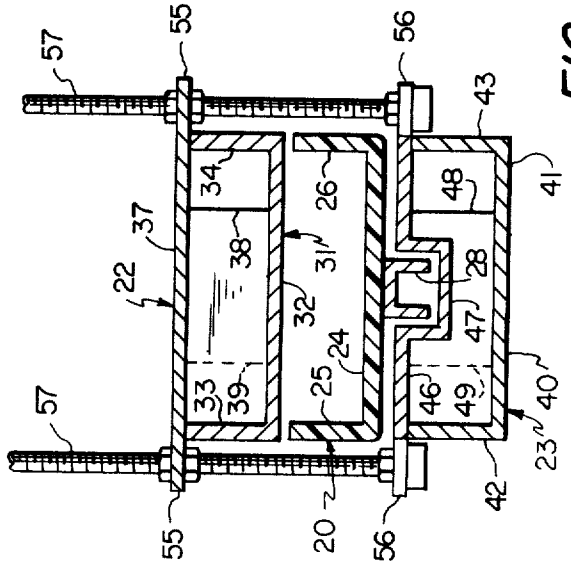

FIG. 3

APPARATUS FOR AGGLOMERATING AND/OR DRYING AND STERILIZING PARTICULATE MATERIAL

RELATED APPLICATIONS

Apparatus according to the invention are useful in practicing the method disclosed and claimed in my copending application Ser. No. 461,964, filed concurrently herewith. My copending application Ser. No. 461,962, filed concurrently herewith, discloses and claims a related method for sterilizing particulate solids.

BACKGROUND OF THE INVENTION

Particulate materials of various kinds are commonly subjected to thermal treatment, as in drying, or to treatments in which heat is necessarily employed as part of a more extensive treatment, as in agglomeration. For many particulate materials, conventional thermal treatments, as by steam or by hot gas, are acceptable. Other more sensitive materials, however, frequently cannot tolerate conventional heat treatment without deleterious effects. Typical of such materials are the dehydrated citrus juices in powder form, smokeless gunpowder, and the like.

Additionally, it has been desirable to agglomerate finely particulated materials, such as dehydrated juices in powder form, which heretofore have been virtually impossible to agglomerate regardless of the problem of heat sensitivity. It has also been desirable to minimize or destroy any microbiological population which may be present in particulate materials, without requiring rigorous thermal or chemical treatments of the particles, but no apparatus capable of accomplishing that end has heretofore been available.

OBJECTS OF THE INVENTION

It is accordingly a general object of the invention to devise an apparatus capable of carrying out such treatments as agglomeration, drying and sterilizing of finely particulate solid materials without adversely affecting the particulate material.

Another object is to provide an improved apparatus for agglomerating particulate solids, with the apparatus being especially useful for agglomerating those materials which are sensitive to heat or to which it is not desirable to add moisture.

A further object is to provide an apparatus for subjecting finely particulate solid materials to a radio frequency field in such fashion that the moisture content of each particle is uniformly heated dielectrically, with the dielectric heating also being uniform throughout the entire mass of particles being treated.

SUMMARY OF THE INVENTION

Broadly considered, apparatus according to the invention comprise a vibratory conveyor capable of both conveying particulate solid material and causing the particles to move in directions generally transverse to the line of conveyor feed so that the mass of particles being conveyed is continuously agitated to provide only transitory, essentially instantaneous contact of the particles with the involved surfaces of the conveyor, the conveyor being arranged to pass the particulate material between two elongated, spaced electrodes connected to a radio frequency generator. Advantageously, the surfaces contacted by the particles are of non-metallic material of such dielectric property as to avoid undue dielectric heating of the parts presenting those surfaces, and one or both of the electrodes are cooled to prevent heat build-up.

In order that the manner in which the foregoing and other objects are achieved according to the invention can be understood in detail, particularly advantageous embodiments thereof will be described with reference to the accompanying drawings, which form part of the original disclosure hereof, and wherein:

FIG. 1 is a semi-diagrammatic side elevational view of a treatment system employing one apparatus according to the invention;

FIG. 2 is a longitudinal vertical sectional view of the apparatus of FIG. 1;

FIGS. 3 and 4 are transverse sectional views taken generally on lines 3—3 and 4—4, FIG. 2, respectively; and

FIG. 5 is a transverse sectional view illustrating a portion of the apparatus according to another embodiment of the invention.

DETAILED DESCRIPTION OF THE INVENTION

Referring first to FIG. 1, the system comprises an elongated generally horizontal trough 1 of U-shaped transverse cross-section. The material to be treated is supplied to one end of trough 1 via a feeding funnel 2. Trough 1 is vibrated by a conventional electromagnetic vibrator 3, with the vibration being essentially reciprocatory along a line, such as line 4, which slants upwardly and toward the end of the trough opposite funnel 2. With the trough vibrated at, e.g., 750–2,000 cycles per second, particulate material supplied to the trough 1 by funnel 2 is both agitated and caused to transverse the trough lengthwise, ultimately being discharged therefrom at the end opposite the funnel. The nature of the agitation caused by vibration of the trough is such that the particles supplied via funnel 2 are in motion, through the atmosphere in which the trough is located, for most of the time required to pass through the trough, contact of the particles with the trough being essentially instantaneous, and extensive random particle-to-particle contact accordingly occurs.

Radio frequency energy is applied for a major portion of the path of travel for the particulate material being treated. Thus, a conventional RF generator 5 is connected to electrodes 7 and 8, electrode 7 being spaced above the bottom wall of trough 1 and extending lengthwise of the trough and parallel to the bottom wall, and electrode 8 being located immediately below the bottom wall of the trough and extending parallel to both the trough and electrode 7. RF generator 5 is constructed to provide radio frequency energy at a frequency in the range of 5–70 mhz., the generator operating typically at an RF voltage of 10,000–27,000 and a plate current of 1.5–3 amp. Trough 1 is advantageously formed of polymeric material having good dielectric properties, i.e., a low dielectric constant and a low power factor, so as not to be significantly heated by the radio frequency energy. Electrodes 7 and 8 are typically of aluminum, and lower electrode 8 is advantageously a hollow, liquid-cooled electrode, with the coolant, such as a machine oil which is not a conductor for radio frequency energy, supplied via input conduit 9 and outlet conduit 10, the oil being maintained at a suitable relatively low temperature by being passed

through a conventional heat exchanger (not shown). The combination of trough **1**, vibrator **3** and electrodes **7,8** is enclosed in a suitable radio frequency shielding structure **11** which can be of aluminum sheet. An adjustable levelling blade **12** is provided to determine the depth of the bed of particulate material on the bottom of trough **1**.

The treated material is delivered via a funnel **13** to a conduit **14** communicating with a chamber **15** at a lateral point near the top of the chamber. Chamber **14** has a bottom opening to which a vertically depending discharge conduit **16** is connected, passage of material through conduit **16** being controlled by a valve **17**. Within chamber **15**, a partition **18** slants downwardly toward discharge conduit **16**, the partition being spaced from the discharge opening of conduit **14** by a distance greater than its spacing from the location of discharge conduit **16**. The bottom edge of partition **18** is spaced slightly above the bottom wall of chamber **15**. At its top, in a location on the side of partition **18** opposite conduit **14**, chamber **15** is provided with an opening communicating with a conduit **19** connected to a vacuum pump **P**. With the vacuum pump operating continuously, a current of atmospheric air is drawn through conduit **14** into chamber **15**, and the agglomerated material discharged from trough **1** is entrained in that air current. When the agglomerated material enters chamber **15**, the solid material impinges on partition **18** and descends by gravity into discharge conduit **16**.

The embodiment of the apparatus shown in FIGS. **2–4** comprises a generally horizontal trough **20**, a conventional electromagnetic vibrator **21**, an upper electrode **22**, and a lower electrode **23**.

Trough **20** consists of an elongated integral body formed of polymeric material having good dielectric properties so as not to be heated by radio frequency energy. Typically, the trough can be of polytetrafluoroethylene, or of a fiber glass reinforced epoxy resin, or a fiber glass reinforced silicone polymer. The trough is of U-shaped transverse cross section, having a flat bottom wall **24** and flat side walls **25,26**, and can be open at both ends. Trough **20** can be supported in horizontal position solely via its connection to vibrator **21**, or additional supporting means (not shown) of the vibration isolator type can be employed.

Vibrator **21**, FIG. **2**, is stationarily mounted and includes a vibratory output member **27**. A rigid channel member **28** extends along the bottom face of bottom wall **24** of the trough, being aligned along the longitudinal center line of the trough and rigidly secured to bottom wall **24**, as by fasteners **29** made of polymeric material. The output member **27** of vibrator **21** is secured to the bottom face of a block **30** which is disposed in and rigidly secured to one end portion of channel member **28**. Block **30** can be of rigid dielectric material to provide additional RF isolation for the vibrator.

Electrodes **22** and **23** are elongated hollow metal electrodes of rectangular plan conforming to that of the trough. Advantageously, the electrodes are of aluminum. Electrode **22** comprises a body **31** having a flat rectangular bottom wall **32**, flat side walls **33** and **34**, and flat end walls **35** and **36**, the top of the hollow structure defined by body **31** being closed by a flat top plate **37**. A plurality of partitions **38** project inwardly from wall **33**, and a plurality of partitions **39** extend inwardly from wall **34**, the partitions being shorter than the space between the side walls. Partitions **38** are spaced apart lengthwise of the electrode, as are partitions **39**, and the two sets of partitions alternate so that one partition **38** is located between each adjacent pair of the partitions **39**, and the partitions and the electrode walls thus cooperate to define a tortuous flow path from end wall **35** to end wall **36**. A cooling water supply tube **40** opens through end wall **35** to supply water to the interior of the electrode, and the cooling water is discharged via an exhaust tube which opens through end wall **36**.

Electrode **23** similarly comprises a main body **40** having a flat rectangular bottom wall **41**, flat side walls **42** and **43**, and flat end walls **44** and **45**, the top of the hollow structure defined by body **40** being closed by a top member **46** which is mainly flat but includes a longitudinally extending central channel **47** dimensioned to freely accommodate member **28**. Alternating partitions **48,49** are provided as described with reference to partitions **38,39**. Cooling liquid, such as a suitable machine oil, is supplied to the interior of electrode **23** by a supply tube **50** at end wall **44** and is discharged via exhaust tube **51** at end wall **45**. Electrodes **22** and **23** are connected to a radio frequency generator (not shown) having the characteristics and in the manner hereinbefore described with reference to FIG. **1**.

Adjacent each end of electrode **22**, top plate **37** has two transversely aligned laterally projecting mounting ears **55**. Similarly, top plate **46** of electrode **23** has, at each end of the electrode, a pair of mounting ears **56**. At each end of the pair of electrodes, two vertical threaded mounting rods **57**, FIG. **3**, of polytetrafluoroethylene or like dielectric, are provided, each rod **57** extending through openings in the corresponding pair of ears **55,56**. The headed lower ends of rods **57** are engaged below ears **56**, and nuts **58** secure plates **37,46** rigidly to the rods **57**. The upper ends of rods **57** are secured to suitable mounting members **59** by nuts **60**, FIG. **2**.

The electrodes are connected to a conventional RF generator by a conventional coaxial cable **61**, a conventional coaxial connector **62** serving to connect the central conductor **63** electrically to plate **37**, the shell of the connector **62** being connected to outer conductor **64** and, by a conductor not shown, to plate **46**.

Electrodes **22** and **23** are of equal length and are mutually parallel and in vertical alignment. Trough **20** is longer than electrodes **22,23** and is disposed between the two electrodes, with the input end **20***a* of the trough projecting well beyond the respective vertically aligned ends of the electrodes. A delivery funnel **65** is arranged above the delivery end **20***a* of the trough, being supported by any suitable support means, such as the shielding means for the apparatus (not shown), independent of the trough. As seen by comparison of FIGS. **2** and **4**, the spout **66** of the funnel is of elongated rectangular cross section, the width of the spout being only slightly less than the space between side walls **25,26** of trough **20**, and the funnel being so positioned that the open bottom end of spout **66** is spaced above bottom wall **24** of the trough by a distance slightly greater than the depth desired for the bed of particulate material to be established in the trough.

Between funnel **65** and electrodes **22** and **23**, an adjustable blade **67** is provided to assure that the depth of the bed of particulate material will be essentially uniform across the width of the trough. Blade **67** is in the

form of a flat plate of polytetrafluoroethylene or equivalent dielectric material, the plate being slotted near its ends to accommodate side walls **25,26** of the trough in slidable fashion so that, with the blade lying in a vertical plane, it can be moved upwardly or downwardly to adjust the distance between the bottom edge **67***a* of the blade and bottom wall **24** of the trough. A projection **68** is secured to blade **67** at the top thereof and projects toward the electrodes. A vertical adjusting screw **69** has an unthreaded shank portion journalled in projection **68,** the threaded shank of the screw depending therefrom and being engaged in a threaded bore through a cross member **70,** the ends of the cross member being rigidly fixed to side walls **25** and **26,** respectively. Knurled head **71** of the screw **69** is exposed above support **68** so that manual manipulation of the screw to adjust the vertical position of blade **67** is easily accomplished. Elements **68–71** are advantageously of rigid polymeric material having good dielectric characteristics so as not to be unduly heated by radio frequency energy.

Vibrator **21** acts through rigid output member **27** and channel member **28** to vibrate trough **20** at relatively high frequency and low amplitude in the direction of arrow **21***a*. During each cycle of vibratory movement, the trough is moved through a very short distance upwardly and away from vibrator **21** and then in the reverse direction, downwardly and toward the vibrator. By design and adjustment of the vibrator **21,** the frequency and amplitude of the vibratory movement of the trough can be predetermined in accordance with the particle size and density of the particulate material involved, and the throughput rate (and thus the residence time) required for the particular thermal treatment to be accomplished. Advantageously, the trough is vibrated at a frequency of 750–2,000 cycles per second, with an amplitude or excursion of, e.g., less than one-sixteenth inch.

The particulate solid material is supplied at a constant rate such as to establish on the bottom wall of trough **20** a bed of particulate material having a static depth, i.e., that depth which would exist if the trough were not vibrating, typically on the order of one-sixteenth inch, the bed being rendered uniform by the levelling action of blade **67.** The vibratory motion imparted to the trough by vibrator **21** serves two functions, which can be considered broadly as conveying and agitating. Conveying occurs because the upward portion of each cycle of vibratory motion of bottom wall **24** of the trough projects all of the particles upwardly and toward the delivery end of the trough, the particles then being out of engagement with the bottom wall until the upward portion of the next cycle of movement. Thus, considering the idealized case of only a single particle, rather than a bed of particles, the single particle is engaged and projected by a different point on the surface of the bottom wall during each cycle of the vibratory movement, the points being spaced apart by small distances so as to lie in a series progressing from the input end to the discharge end of the trough. The agitating effect has two advantageous characteristics. First, since contact between the particles and bottom wall **24** of the trough is instantaneous, the particles are kept in essentially constant movement and, as a result of that movement, the surfaces of the particles are subjected to the air or other gaseous atmosphere in which the trough is located rather than being in long term contact with the solid surfaces of the trough or the surfaces of adjacent particles. Next, since the static depth of the bed of particles is large in comparison to the particle size, frequent particle-to-particle contact, random in nature, occurs. Additionally, with side walls **25, 26** of the trough having a height which is large in comparison with the bed thickness and the amplitude of vibratory movement, trough **20** serves to confine the particulate material to a path of travel which is between and aligned longitudinally with the elongated electrodes **22** and **23.**

A particular advantage of the apparatus is that it makes it possible to pass a mass of particulate material through a defined treating zone and to subject the material to radio frequency energy throughout its residence time in the treating zone, with each particle (or each particle and each agglomerate, in the case of agglomeration) being subject to only a minimum of contact with other surfaces during the treatment. In the case of thermal drying or drying and sterilization, for example, a more predictable and assured treatment is accomplished than has heretofore been possible with apparatus in which the particulate material is supported as a static bed.

The embodiment of FIGS. **2–4** has the advantage that the surfaces of the trough are of inert material, so that, for example, particulate materials which cannot safely be passed in contact with metal can be treated. Thus, the embodiment of FIGS. **2–4** can be employed to dry smokeless powder. This embodiment also has the distinct advantage that the thermal input to the particulate material being treated is essentially limited to the heat arising from dielectric heating of the free moisture contained by the particles, both electrodes **22** and **23** being water-cooled.

Alternatively, the trough **20** and lower electrode **23** can be replaced by the combined trough and electrode shown in FIG. **5.** Here, the trough **120** comprises two spaced, parallel side members **125, 126** formed of polytetrafluoroethylene or the like, the side members having an outwardly projecting base flange **125***a*, **126***a*, respectively, and being secured by nylon screws **129** to a flat metal plate **123** which constitutes the lower electrode of the apparatus. The combined trough and electrode **120** can be secured directly to the rigid channel member **28,** FIG. **2,** and additionally supported by conventional vibration isolator means (not shown), the support rods **57,** FIGS. **2** and **3,** serving only to support the upper electrode **22.** In the embodiment of FIG. **5,** lower electrode **123** is not specially cooled.

What is claimed is:

1. In an apparatus for accomplishing thermal treatment, as in agglomerating, drying and sterilizing, of particulate solid materials having a significant moisture content, the combination of

two elongated electrodes of substantial width arranged one above the other and spaced apart by a significant distance to define a treating zone;

at least one of said electrodes being hollow and equipped with inlet and outlet means for the flow of a cooling liquid therethrough;

means for operatively connecting the electrodes to a radio frequency generator;

conveyor means extending between said electrodes and through said treating zone in a direction lengthwise of the electrodes,

said conveyor means having a supporting surface which has an input end and a discharge end and is at least substantially as long and wide as the electrodes and is capable of receiving and supporting a relatively thin bed of the particulate material,

said conveyor means comprising vibrating means connected to vibrate said surface to both agitate the particulate material and cause the particulate material to move from the input end to the discharge end of said supporting surface,

there being a substantial free space between said supporting surface and the upper one of said two electrodes, which space can be occupied by a gaseous atmosphere of predetermined temperature and humidity,

said vibrating means being constructed and arranged to impart to said surface vibratory motion having components directed respectively toward and away from said upper electrode; and

means for supplying particulate material to the input end of said supporting surface.

2. The combination defined in claim **1,** wherein

said conveyor means comprises an elongated trough and said supporting surface is the upper surface of said trough.

3. The combination defined in claim **2,** wherein

said trough is longer than said electrodes and said input end projects beyond the adjacent end of said upper electrode.

4. The combination defined in claim **2,** wherein

said trough is of inert, non-metallic material having a low dielectric constant and low power factor.

5. The combination defined in claim **4,** wherein

the lower one of said electrodes is separate from said trough, and

the combination further comprises

a plurality of upright members rigidly interconnecting said electrodes and by which the combination of said electrodes can be connected to a support, said upright members being of a material having a low dielectric constant and a low power factor.

6. The combination defined in claim **4,** wherein

the lower one of said electrodes is separate from said trough, and

both of said electrodes are hollow structures each equipped with inlet and outlet means for the flow of cooling liquid therethrough.

7. The combination defined in claim **6,** wherein

said conveyor means comprises an elongated rigid member extending along and rigidly secured to the lower face of the bottom wall of said trough;

said lower electrode comprises an upper wall member formed with an elongated channel through which said elongated rigid member extends; and

said vibrating means is connected to said elongated rigid member.

8. The combination defined in claim **2,** wherein

said vibrating means is connected to said trough and oriented to impart thereto generally reciprocatory motion along a line slanting upwardly and toward the discharge end of the trough.

9. The combination defined in claim **2,** wherein

said upper electrode is hollow, and

the lower one of said electrodes comprises a metal plate constituting the bottom wall of said trough.

10. The combination defined in claim **2,** wherein

said trough comprises

a flat metal plate constituting the bottom wall of the trough, and

side wall members secured to said plate and projecting upwardly therefrom, said side wall members being of a material having a low dielectric constant and a low power factor;

said plate constituting the lower one of said electrodes.

* * * * *