Feb. 10, 1953 F. W. COLLINS ET AL 2,628,122

RAILWAY TIE PLATE LIFTER

Filed Jan. 26, 1950

FIG. 1

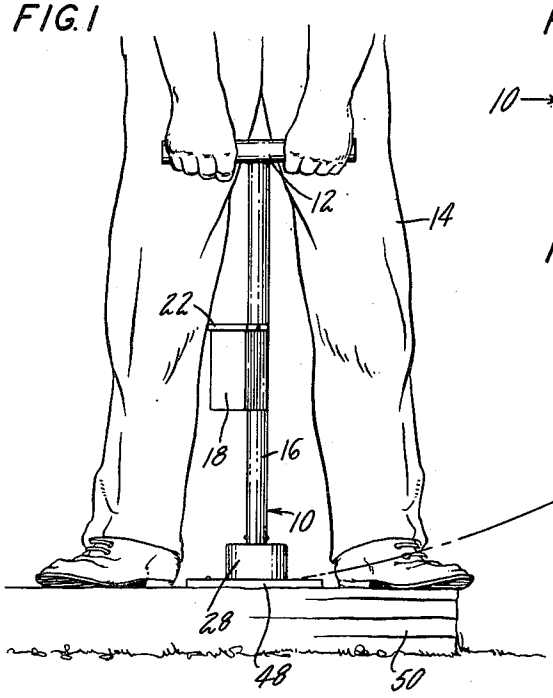

FIG. 2

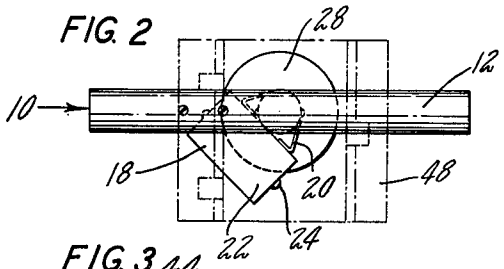

FIG. 3

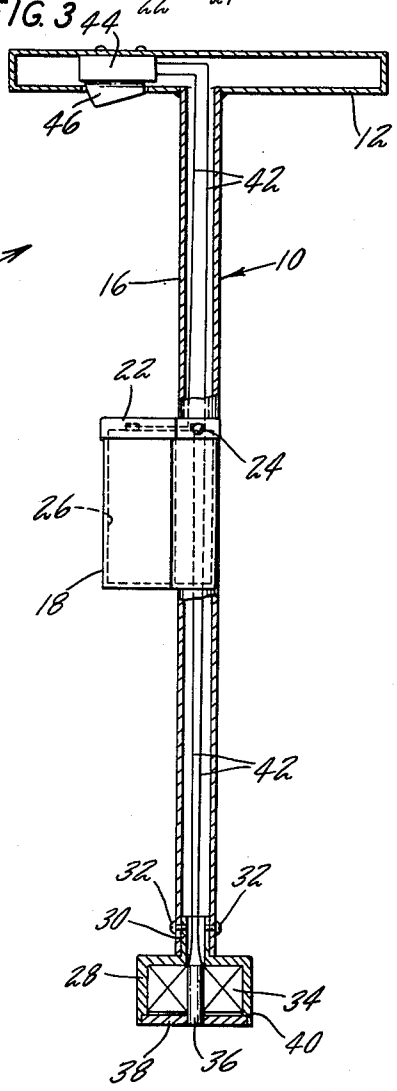

FIG. 4

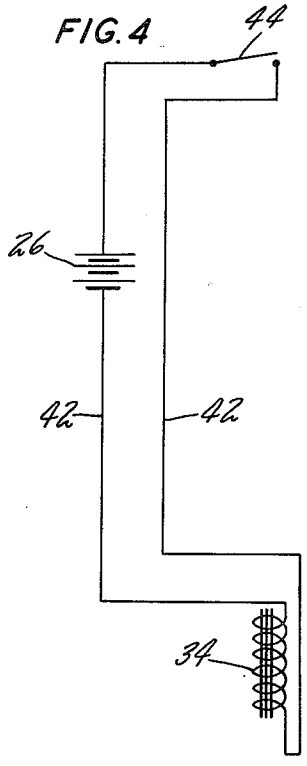

INVENTORS
FRANK W. COLLINS
WALTER L. DIETRICH

BY Lindsey, Prutzman and Hast
ATTORNEYS

Patented Feb. 10, 1953 2,628,122

UNITED STATES PATENT OFFICE

2,628,122

RAILWAY TIE PLATE LIFTER

Frank W. Collins and Walter L. Dietrich,
Windsor, Conn.

Application January 26, 1950, Serial No. 140,618

2 Claims. (Cl. 294—65.5)

1

This invention relates to improvements in a railway tie plate lifter or throw-out bar.

As is commonly known, steel tie plates are disposed between each railway tie and the rails when spiked to the tie for purposes of providing a firm and relatively broad metallic surface upon the tie against which the rails rest. Such tie plates are relatively heavy. Tie plates in common use today frequently weigh as much as twenty pounds or more and are at present usually handled manually.

It is common practice in railway track work as practiced at present to replace a rail by removing the spikes from the ties so as to free the rail therefrom, disconnect said rail from the connecting angle bars by which said rail is connected to the ends of the adjacent rails, remove the rail from its position on the tie plates, manually remove the tie plates entirely from the ties, and replace them with other tie plates placed to gage measurement upon the ties, replace the previously removed rail or a new one in its place, secure the rail at its ends to the ends of the adjacent rails, and spike the rail and tie plates to the ties. The foregoing description of operation is merely one example in which it is necessary to manually, directly handle tie plates when exchanging rails in a section of track. Such handling of the tie plates is presently performed by manually grasping and removing the tie plate and then manually placing a new tie plate upon the tie in its proper position according to gage measurement. As stated above, the tie plates are relatively heavy and it is not uncommon that operators injure their hands and fingers during the handling of the same. Such manual operations also consume a considerable amount of time.

It is an object of the present invention to provide a tie plate lifter operable to engage a tie plate and either lift it from its position on a tie or place it in its correct position upon a tie according to gage measurement without requiring manual engagement of the tie plate directly by the operator.

It is another object of the invention to provide a tie plate lifter which embodies electromagnetic means for engaging a tie plate and holding it attached to the tie plate lifter comprising the present invention for purposes of handling the tie plate in any manner desired, the electromagnet being capable of quickly being de-energized so as readily to disengage the tie plate when desired.

It is still another object of the invention to

2

provide a tie plate lifter employing electromagnetic means for holding a tie plate detachably attached thereto and providing a battery box supported on the tie plate holder in a box in a position so as not to cause obstruction during use by the operator and also provide ready view of the tie plate by the operator while handling a tie plate magnetically attached to the tie plate lifter.

Details of these objects and of the invention, as well as other objects thereof, are set forth in the attached specification and illustrated in the accompanying drawings forming a part thereof.

In the drawings:

Fig. 1 is a front elevation of a tie plate lifter shown in operative position relative to a tie plate on a railway tie.

Fig. 2 is a top plan view of the lifter shown in Fig. 1, illustrated on a somewhat larger scale, and positioned operatively relative to a tie plate shown in dotted lines.

Fig. 3 is a front elevation of the tie plate lifter shown in Fig. 2, said lifter being illustrated partly in section to illustrate details of the invention.

Fig. 4 is a wiring diagram of the circuit embodied in the tie plate lifter comprising the present invention.

Referring to the drawings, the tie plate lifter 10 comprises a handle 12 which, in its normal operative position is disposed horizontally as illustrated in Fig. 1. Opposite ends of the handle 12 are engageable by the hands of an operator 14 as clearly shown in Fig. 1. Depending from the handle 12 is a stem 16, the upper end of which is made integral with the handle 12 by any suitable means such as welding. Preferably, the handle 12 and stem 16 are tubular and therefore hollow for purposes of accommodating the circuit wires to be described and also for purposes of providing strength combined with lightness in weight.

A battery box 18, which is preferably made from any suitable material such as sheet metal, is secured to the stem 16 intermediately of the ends thereof such as by welding, for example. The box is preferably rectangular in shape as is clearly shown in Figs. 2 and 3 and the box may be braced relative to the stem 16 by suitable brackets 20 which may be welded or otherwise secured to the box and stem. The box has a removable, preferably telescoping, top 22 and said top may be secured to the box by a pair of screws 24. Mounted within the box is a suitable dry cell battery 26, which may be of any appropriate power such as six volts, for example.

A cup-shaped housing 28 having a hollow stem 30 projecting from its upper end is secured to the lower end of stem 16 by the stem 30 telescopically engaging the lower end of stem 16. A plurality of screws 32 secure the housing and stem 16 in assembled relationship. The housing 28 encloses an electromagnetic coil 34 which surrounds an iron core 36. The housing 28 is preferably formed from iron or steel. The lower open face of the housing 28 is covered by a suitable closure 38 which may be formed of any suitable non-magnetic material, such as brass, fitted into a suitable seat 40 formed in the outer end of cup 28. The closure 38 may be secured within its seat by any suitable means such as screws, peening, or the like. Said face serves to protect the coil 34 as well as hold it in its operable position.

The leads of the coil 34 are connected to circuit wires 42 which extend through the stem 16, said wires also being connected to the leads of the battery 26. A switch 44 is mounted in one of the ends of the handle 12 as clearly shown in Fig. 3, the operating member 46 of the switch projecting below the handle 12, whereby the same may readily be operated by one hand of the operator 14 during use. The switch is connected by one of the wires 42 within the circuit in such a manner as to energize the coil 34 by the battery when the switch 44 is closed, and to de-energize the coil when the switch 44 is open.

During operation, the operator 14 stands adjacent the tie plate 48 so as to straddle it with his feet, for example, while standing upon the tie 50 on which the tie plate 48 is disposed or upon one of the ties adjacent the tie 50. The housing 28 of the electromagnet is placed against the upper surface of the tie plate 48 as shown in Fig. 1, and also in plan view in Fig. 2, so that the lower rim of housing 28 and the outer end of core 36 are disposed firmly against the upper surface of tie plate 48. The switch 44 is then closed so as to energize the electromagnet. Preferably, the power provided by the electromagnet and battery is such that it is in excess of the force required merely to lift the weight of the tie plate. Thus, if the tie plate has become somewhat adhered to the surface of the tie, the tie plat lifter comprising the present invention will nevertheless readily dislodge the tie plate from the tie and permit swinging the tie plate lifter and tie plate pendulum like, for example, in the direction of arrow shown in Fig. 1. While being so swung, the switch 44 may be opened by the operator after the tie plate has been cleared from the tie and said tie plate will then immediately be detached from the tie plate lifter due to the de-energizing of the coil 34 when the switch is opened.

The device is of a nature readily adapting it to be swung pendulum like as indicated in Fig. 1 and, with only slight practice, an operator is able to manipulate the tie plate lifter so as to be able to engage a tie plate and swing it so as to cause the tie plate to be deposited in substantially any desired position adjacent the tie. Conversely, a tie plate may be engaged by the electromagnet of the tie plate lifter 10 and placed by it upon a tie in any desired position according to gage measurement, for example. During such placing of a tie plate upon a tie with the lifter 10, an operator may look downward and readily see the edges of the tie plate 48 as is clearly illustrated in Fig. 2, so that the tie plate may be accurately positioned upon tie 50 without the battery box 18 obstructing the view of the tie plate by the operator.

It will also be noted that the longitudinal axis of the box 18, as viewed in plan view in Fig. 2, is at an acute angle to the axis of the handle 12, whereby the box 18 is positioned so as not to hit the legs of the operator during use as well as not obstruct the vision of the operator while viewing the tie plate 48 as when the operator is placing it in operative position upon a tie.

A wiring diagram illustrating the circuit employed in the tie plate lifter 10 to electrically connect the switch and battery with the coil is illustrated in Fig. 4.

It will be seen from the foregoing that the tie plate lifter comprising the present invention is simple and rugged in construction, capable of ready manipulation by an operator without undue fatigue for purposes of effectively lifting a tie plate from a tie or placing a tie plate in operative position upon a tie, to gage measurement or otherwise. The device obviates the necessity for manually engaging the tie plate, whereby the hazards previously attending manual handling of tie plates are materially lessened, if not eliminated entirely.

The power consumption of the electromagnet is also such that hundreds of tie plates may be lifted by a lifter comprising the present invention without requiring the replacement of the battery which energizes the electromagnet. The cost of such batteries being low, the total operating cost of said lifter is negligible, and the speed with which tie plates may be handled by such lifter is far greater than that possible by present manual methods.

While the invention has been illustrated and described in its preferred embodiment and has included certain details, it should be understood that the invention is not to be limited to the precise details herein illustrated and described since the same may be carried out in other ways, falling within the scope of the invention as claimed.

We claim as our invention:

1. A railway tie plate lifter comprising in combination, a T-shaped member, the cross-piece thereof comprising a handle and the stem being tubular and depending therefrom in normal operative position, a cup-shaped electromagnet housing connected to the free end of said stem, an electromagnet coil and core supported within said housing, said housing and core being engageable with the top of a tie plate, a battery box supported by said stem intermediately of the ends thereof, said battery box being offset to one side of said stem, a battery within said box, a manually operable switch supported by said handle, and circuit wires carried by said stem and handle and electrically interconnecting said switch and battery with the coil of said electromagnet.

2. A railway tie plate lifter comprising a tubular T-shaped member, the cross piece thereof defining a handle comprising two hand grips adjacent the opposite end portions thereof with the stem depending therefrom in normal operating position, an inverted generally cup-shaped housing secured to the free end of said stem, an electromagnetic coil and core supported within said housing, said core having one end portion projecting into the open end of said housing, a non-magnetic disk-like closure plate secured to said housing adjacent the open end thereof, said closure plate having a central aperture surround-

ing the projecting end portion of said core, a battery box secured to said stem intermediate the ends thereof, said battery box being offset to one side of said stem, a battery within said box, a manually operable switch supported by said handle in one hand grip portion thereof, and circuit wires disposed within said stem and handle electrically interconnecting said switch and battery with said coil in series relation.

FRANK W. COLLINS.
WALTER L. DIETRICH.

REFERENCES CITED

The following references are of record in the file of this patent:

UNITED STATES PATENTS

Number	Name	Date
710,041	Clark	Sept. 30, 1902
1,441,903	Balazivk	Jan. 9, 1923
1,904,224	Hargrove	Apr. 18, 1933
2,269,458	Kahn	Jan. 13, 1942