(12) INTERNATIONAL APPLICATION PUBLISHED UNDER THE PATENT COOPERATION TREATY (PCT)

(19) World Intellectual Property Organization
International Bureau

(43) International Publication Date
6 April 2017 (06.04.2017)

WIPO | PCT

(10) International Publication Number
WO 2017/055907 A1

(51) International Patent Classification:
B62B 9/14 (2006.01) *F24F 3/16* (2006.01)
F24F 9/00 (2006.01)

(21) International Application Number:
PCT/IB2016/001408

(22) International Filing Date:
13 September 2016 (13.09.2016)

(25) Filing Language: English

(26) Publication Language: English

(30) Priority Data:
201510768339.0
30 September 2015 (30.09.2015) CN
201610200007.7 31 March 2016 (31.03.2016) CN

(71) Applicant: **JOHNSON & JOHNSON CONSUMER INC.** [US/US]; 199 Grandview Road, Skillman, New Jersey 08558 (US).

(72) Inventor: **LEE, Curtis**; 3285 Dongchuan Road, Shanghai 200245 (CN).

(74) Agents: **SHIRTZ, Joseph F.** et al.; Johnson & Johnson, One Johnson & Johnson Plaza, New Brunswick, New Jersey 08933 (US).

(81) Designated States *(unless otherwise indicated, for every kind of national protection available)*: AE, AG, AL, AM, AO, AT, AU, AZ, BA, BB, BG, BH, BN, BR, BW, BY, BZ, CA, CH, CL, CN, CO, CR, CU, CZ, DE, DK, DM, DO, DZ, EC, EE, EG, ES, FI, GB, GD, GE, GH, GM, GT, HN, HR, HU, ID, IL, IN, IR, IS, JP, KE, KG, KN, KP, KR, KW, KZ, LA, LC, LK, LR, LS, LU, LY, MA, MD, ME, MG, MK, MN, MW, MX, MY, MZ, NA, NG, NI, NO, NZ, OM, PA, PE, PG, PH, PL, PT, QA, RO, RS, RU, RW, SA, SC, SD, SE, SG, SK, SL, SM, ST, SV, SY, TH, TJ, TM, TN, TR, TT, TZ, UA, UG, US, UZ, VC, VN, ZA, ZM, ZW.

(84) Designated States *(unless otherwise indicated, for every kind of regional protection available)*: ARIPO (BW, GH, GM, KE, LR, LS, MW, MZ, NA, RW, SD, SL, ST, SZ, TZ, UG, ZM, ZW), Eurasian (AM, AZ, BY, KG, KZ, RU, TJ, TM), European (AL, AT, BE, BG, CH, CY, CZ, DE, DK, EE, ES, FI, FR, GB, GR, HR, HU, IE, IS, IT, LT, LU, LV, MC, MK, MT, NL, NO, PL, PT, RO, RS, SE, SI, SK, SM, TR), OAPI (BF, BJ, CF, CG, CI, CM, GA, GN, GQ, GW, KM, ML, MR, NE, SN, TD, TG).

Published:
— *with international search report (Art. 21(3))*

(54) **Title**: PORTABLE, CONTROLLED ENVIRONMENT SYSTEM FOR CHILDREN

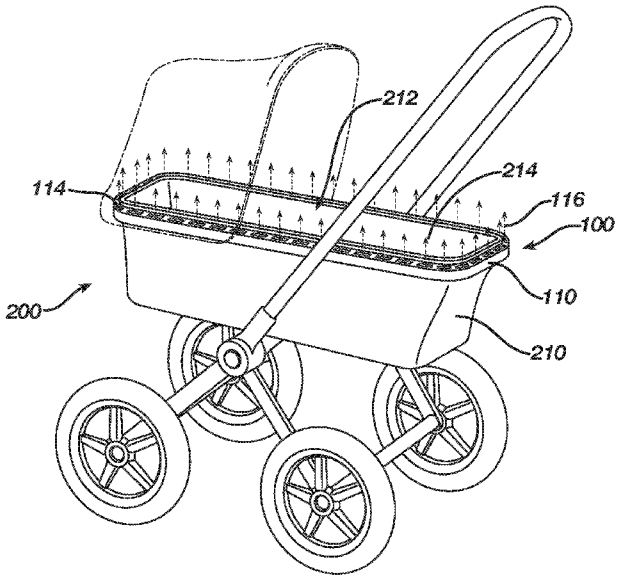

FIG. 1

(57) **Abstract**: A controlled environment system includes (a) a closed loop frame that defines a substantially planar containment area, (b) at least one air barrier nozzle arranged and configured about the frame, (c) a system for generating a flow of air connected to the at least one air barrier nozzle, (d) at least one conditioned air nozzle, (e) a system for conditioning air and generating a flow of conditioned air connected to the at least one conditioned air nozzle, and (f) at least one power source operatively connected to the system for generating a flow of air and to the system for conditioning air and generating a flow of conditioned air. The at least one air barrier nozzle is adapted to emit a jet of air within 30° of perpendicular to the plane of the containment area in an upward direction, and it generates a continuous air barrier directed upward from the frame.

WO 2017/055907 A1

Portable, controlled environment system for children

Field of the invention

The present invention relates to a containment and/or transportation device for children, especially babies, to isolate them from airborne pollutants, allergens, and the like.

Background of the invention

Devices are known for isolating people, especially children, from airborne pollutants, allergens, and the like. In particular, such devices are known which can be associated with frames, such as baby carriages and strollers.

Examples of devices that substantially enclose the child with a physical barrier conditioned air are known in WO2008/010209 and GB2301879. Conditioned air can then be supplied to the interior of the enclosure. Unfortunately, such a physical barrier may cause unease to the child who may feel trapped and may make it difficult for a parent or other care giver to quickly access the child to comfort it.

Other devices may supply conditioned air directly onto the child's face. Such direct impingement can be expected to annoy the child.

A more recent example is known in WO2010/031846 in which nozzles of filtered air generate an air barrier across the opening of the stroller or other transportation device. The air barrier also provides a high pressure zone near the child's face of such filtered air, thus isolating the child from ambient air. Unfortunately, this system may suffer from a level of undesired air movement at the child's face and requires large volumes of filtered air to create the clean air barrier.

What is needed is a more efficient system to isolate children from ambient air that may carry excessive pollutants, allergens, and the like. A portable system that isolates the child from ambient air without a complete physical enclosure is also desired. Finally, a system that provides sufficient air stream to create an air barrier to isolate the space around a child from ambient conditions that also provides conditioned, filtered air to that space is needed.

Summary of the invention

Surprisingly, we have found that it is possible to provide an efficient, portable, controlled environment system that isolates a child from ambient air without a complete physical enclosure is possible also desired. This provides a relatively large volumetric air flow to provide sufficient air stream to create an air barrier to isolate the space around a child from ambient conditions. A second, more efficient system provides conditioned, filtered air to the space defined by the air barrier.

In one embodiment, a portable, controlled environment system includes (a) an air barrier subsystem including: (i) a frame configured in a closed loop to define a substantially planar containment area, (ii) at least one air barrier nozzle arranged and configured about the frame, (iii) at least one gap arranged and configured to draw ambient air into the containment area adjacent to the at least one air barrier nozzle to supplement the continuous air barrier, (iv) an ambient air flow generator connected to the at least one air barrier nozzle, and (b) a conditioned air subsystem comprising (i) at least one conditioned air nozzle disposed within the containment area, (ii) a conditioned air generator for conditioning air and generating a flow of conditioned air connected to the at least one conditioned air nozzle, and (c) at least one power source operatively connected to the ambient air flow generator and to the a conditioned air subsystem. The frame has a length up to about 2 meters and a width up to about 2 meters, and the at least one air barrier nozzle is adapted to emit a jet of air within 30° of perpendicular to the plane of the containment area, and it generates a continuous air barrier directed away from the frame.

In one embodiment, the portable, controlled environment system is associated with a baby carriage, and in another embodiment, the system is adapted for placement on a flat surface upon which an infant may be placed.

Brief Description of the Drawing

Fig. 1 is a perspective view of a baby carriage incorporating the controlled environment system according to one embodiment of the present invention.

Fig. 2 is a top view of the air barrier frame useful in the controlled environment system of the baby carriage of Fig. 1.

Fig. 3 is a side view of the air barrier frame of Fig. 2.

Fig. 4 is a schematic view of the controlled environment system of Figs. 1-3.

Fig. 5 is a representation of the air barrier created by an air barrier frame, such as shown in Figs. 2-3.

Fig. 6 is a perspective view of an infant seat protected by a controlled environment system according to an alternate embodiment of the present invention.

Detailed description of the preferred embodiments

Portable, controlled environment systems are desirable in areas of high pollution and/or airborne allergens. These are needed to protect infants from airborne pollutants, allergens, and even insects. These systems can be used in conjunction with child or infant carriers and/or bassinettes.

As shown in Figs. 1-3, a controlled environment system 100 can be used in conjunction with a baby carriage 200. The carriage 200 includes a containment receptacle 210 arranged and configured to contain a child having

at least one opening 212. The controlled environment system 100 includes an air barrier subsystem having a frame 110 configured in a closed loop to define a substantially planar containment area disposed about the opening 212 of the containment receptacle 210. The frame 110 is attached to the containment receptacle 210 through a plurality of mounts 112. The frame 110 has a plurality of air barrier nozzles 114 arranged and configured about the frame 110. Each air barrier nozzle 114 is adapted to emit a respective jet of air 116 perpendicular to the plane of the containment area, preferably in an upward direction. The mounts 112 provide a limited gap 118 between the frame 110 and the containment receptacle 210 permitting a limited flow of ambient air into the containment area adjacent to the at least one air barrier nozzle 114. The size of the gap 118 may vary, based upon the specification of the curtain itself. As the air barrier flow rate increases, more ambient air is needed, and the gap would be increased to accommodate this. However, smaller-than-optimal gap (or no gap), would merely reduce the efficiency of the system as it would still function. The gap 118 can also be different based upon different areas/configurations of the system and flow rates.

The plurality of air barrier nozzles 114 cooperates to generate a continuous air barrier 115 directed away from the frame 110. In addition, the airflow from the plurality of air barrier nozzles 114 draws the limited flow of ambient air through the gap 118 to supplement the airflow delivered by the nozzles 114 to enhance the air barrier 115. An ambient air generator is operatively connected to the plurality of air barrier nozzles 114. As shown schematically in Fig. 4, the ambient air generator includes an air barrier blower 120. Conditioned air 130 is supplied to the interior 214 of the containment receptacle 210 via a conditioned air subsystem including an air conditioner 132 and a blower 134 of conditioned air connected to at least one conditioned air nozzle 136. At least one power source 140 is operatively connected to the ambient air generator, e.g., to the air barrier blower 120, and to the conditioned air generator, e.g., to a conditioned air blower 134, via wires 142. The air conditioner 132 includes at minimum, a replaceable filter. It may also include additional components, such as for as heating, cooling, humidifying, drying, anion and/or ozone treatment, scenting, and the like. The controlled

environment system may also include controllers and processors to enable the user to improve its performance.

Alternatively, a small channel disposed around the frame may form a single air outlet that can be shaped into any shape or dimensions.

The frame 110 can be attached to the baby carriage 200 via mechanical fasteners, including without limitation hooks, clips, clamps, snaps, or the like. These fasteners may also enable the same frame 110 to be connected to other containment receptacles 210, such as a stroller, a crib, a car seat, and the like. Additionally the curtain can be flexible to conform to the shape of the frame and placed over/around the frame.

Optional control and variations of the above system may improve performance. For example, a wind direction and velocity sensor to detect the speed and direction of wind to modify airflow output. Additional baffling or gates can further control the air output from the air openings to either increase or decrease air output in certain areas to improve performance.

Fan controls can also improve performance by allowing the speed of the fan to change based upon outdoor conditions which can improve efficiency and battery life.

Finally, the angle of the output nozzles can also be adjusted to improve performance and modify the flow direction of the surrounding air.

The components of the controlled environment systems may be incorporated into a single unit, such as a larger frame that includes appropriate air passages to deliver the air barrier air to the air barrier nozzles and additional storage space for the blowers, filters, air intakes, and air conditioning components, and optionally power components and control elements. Alternatively, the frame and conditioned air nozzle may be extendable from the other components. In such an example, the blowers, filters, air intakes, and air conditioning components, and optionally power components and control elements may be housed separately with only the air conduits extending to the containment receptacle.

As shown in more detail in Figs. 2-3, the frame is generally rectangular having a length up to about 2 meters, preferably up to about 1.5 meters, and a width up to about 2 meters, preferably up to about 1 meter. In the embodiment shown in Figs. 2-3, these dimensions are adjustable as frame elements 110a and 110c are telescopically slidable into frame elements 110b and 110d. To enable this adjustment, frame elements 110a and 110c are dimensioned to be slidably inserted into frame elements 110b and 110d. Preferably, the openings of frame elements 110b and 110d that accommodate frame elements 110a and 110c are provided with a seal element to minimize undesired escape of air therefrom.

Alternatively, the design can be modular so that section can be added to extend, shorten or otherwise change the overall dimensions and shape of the curtain. The product can also be made from sold extruded silicon or other soft flexible materials such as rubber to conform to different shapes; this also allows the curtain to be folded into a smaller size for travel or carrying

In an alternative embodiment, not shown, the frame dimensions may be adjusted by the use of pleated sections to permit the length and width of the frame to be changed to better match the opening 212 of the containment receptacle 210 used with the air barrier 115.

The frame 110 may be relatively rigid with appropriate enlargement features as described above, or it may be flexible to enable the shape to be modified based up on the user's needs or requirements. In a preferred embodiment the shape of the frame would be closed in nature for the most efficient air flow however a non-closed design could also be used.

Referring to Fig. 5, the jets of air 116 emitted from the frame 110 are directed upwardly to create the air barrier 115. One of ordinary skill in the art will recognize that these upwardly directed jets of air 116 create a region of relatively low air pressure as they move further from the frame and generally converge at a distance above the frame, shown at 115a in Fig. 5. It has been discovered that an air jet output velocity of at least about 0.5 m/s, preferably

about 1 m/s and more preferably at least about 2 m/s creates a stable air barrier.

The interior 214 of the containment receptacle 210 is supplied with conditioned air 130 via at least one nozzle136. The interior 214 thus is at a greater air pressure than ambient to prevent the ingress of polluted air, and the infant 150 placed therein is protected from airborne contaminants.

The conditioned air is filtered, using a replaceable filter 132. Other modification of the conditioned air may also occur, such as heating, cooling, humidifying, drying, anion and/or ozone treatment, scenting, and the like. The replaceable filter 132 is preferably selected to filter out allergens, pollutants, and the like. A representative, non-limiting list of filters includes carbon filters, High-efficiency particulate arresting filters ("HEPA" filters), electrostatic filters, and the like.

While the controlled environment system is shown in Fig. 1 as used with a baby carriage, it can also be used with other containment receptacles, such as a bassinette, an infant seat, and the like. For example, the frame 110 can be placed on a flat surface, such as floor or table, and the infant seat 220 placed within the area defined by the frame as shown in Fig. 6. The frame provides the air barrier 115 and the floor or table provides a containment surface. In this embodiment, the frame engages the table in a close-fitting manner to minimize, if not eliminate, the ingress of ambient air into the interior of the containment receptacle. Any such leaked air will generally be drawn by the jets 116 of the air barrier 115 and be carried away from the containment receptacle.

The specification and embodiments above are presented to aid in the complete and non-limiting understanding of the invention disclosed herein. Since many variations and embodiments of the invention can be made without departing from its spirit and scope, the invention resides in the claims hereinafter appended.

What is claimed is:

1. A portable, controlled environment system comprising:

a) an air barrier subsystem comprising:

i) a frame configured in a closed loop to define a substantially planar containment area having a length up to about 2 meters and a width up to about 2 meters;

ii) at least one air barrier nozzle arranged and configured about the frame, adapted to emit a jet of air within 30° of perpendicular to the plane of the containment area, the at least one air barrier nozzle generating a continuous air barrier directed away from the frame; and

iii) a system for generating a flow of air connected to the at least one air barrier nozzle; and

b) a conditioned air subsystem comprising

i) at least one conditioned air nozzle disposed within the containment area; and

ii) a system for conditioning air and generating a flow of conditioned air connected to the at least one conditioned air nozzle; and

c) at least one power source operatively connected to the system for generating a flow of air and to the system for conditioning air and generating a flow of conditioned air.

2. The portable, controlled environment system of claim 1, wherein the frame length and width are adjustable.

3. The portable, controlled environment system of claim 1, wherein the containment area has a length up to about 1.5 meters and a width up to about 1 meter.

4. The portable, controlled environment system of claim 1 wherein at least one air barrier nozzle comprises a plurality of air barrier nozzles arranged and configured about the frame, each air barrier nozzle adapted to emit a respective jet of air within 30° of perpendicular to the plane of the containment area in an upward direction, and the plurality of air barrier nozzles cooperating to generate a continuous air barrier directed upward from the frame.

5. The portable, controlled environment system of claim 1 wherein the frame is substantially oriented in a horizontal plane, and the jet of air is directed in a generally upward direction.

6. The portable, controlled environment system of claim 1 wherein the system for conditioning air and generating a flow of conditioned air comprises a replaceable filter.

7. The portable, controlled environment system of claim 1 wherein the system for conditioning air and generating a flow of conditioned air comprises at least component to condition at least on characteristic selected from the group consisting heating, cooling, humidifying, drying, ionization, ozone, and scent.

8. The portable, controlled environment system of claim 1 wherein at least one gap is arranged and configured to draw ambient air into the

containment area adjacent to the at least one air barrier nozzle to supplement the continuous air barrier.

8. A child carrier comprising a containment receptacle arranged and configured to contain a child having at least one opening and the system of claim 1, wherein the frame is attached about the at least one opening.

9. A bassinette comprising a containment receptacle arranged and configured to contain a child having at least one opening and the system of claim 1, wherein the frame is attached about the at least one opening.

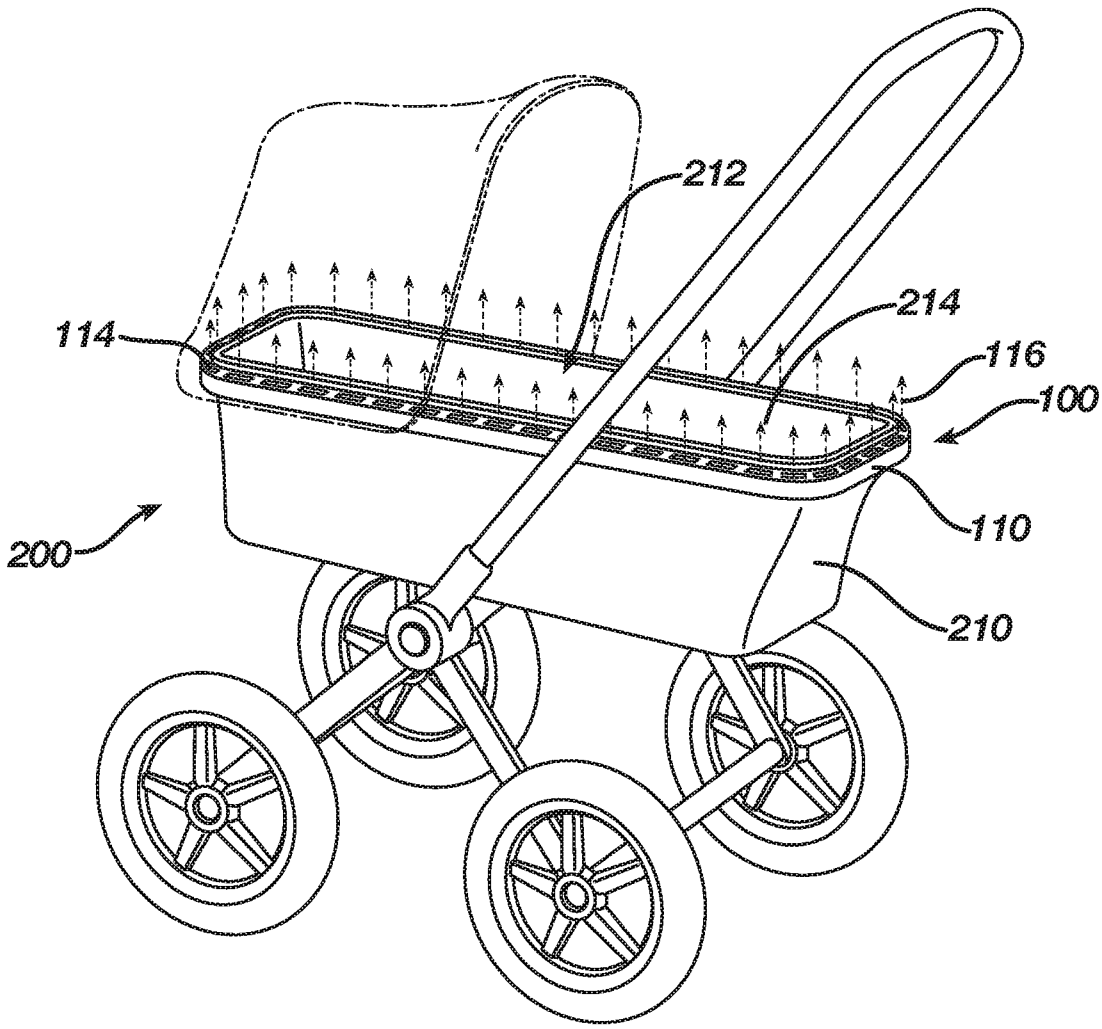

FIG. 1

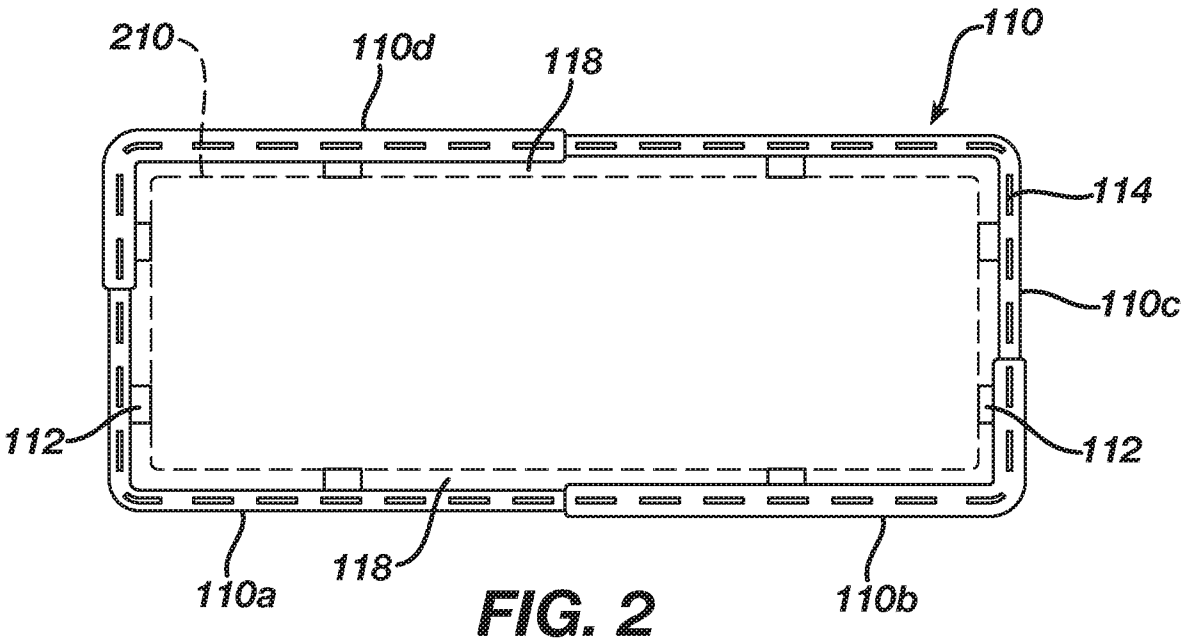

FIG. 2

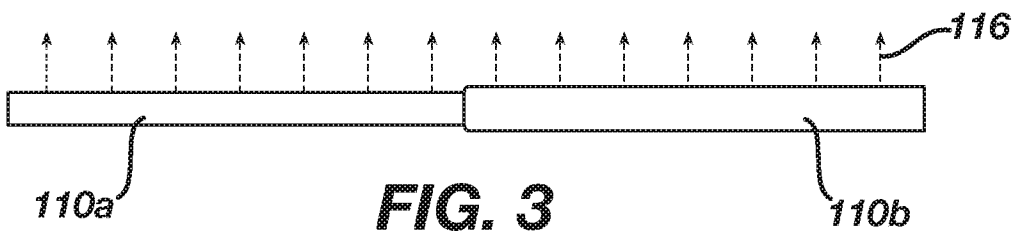

FIG. 3

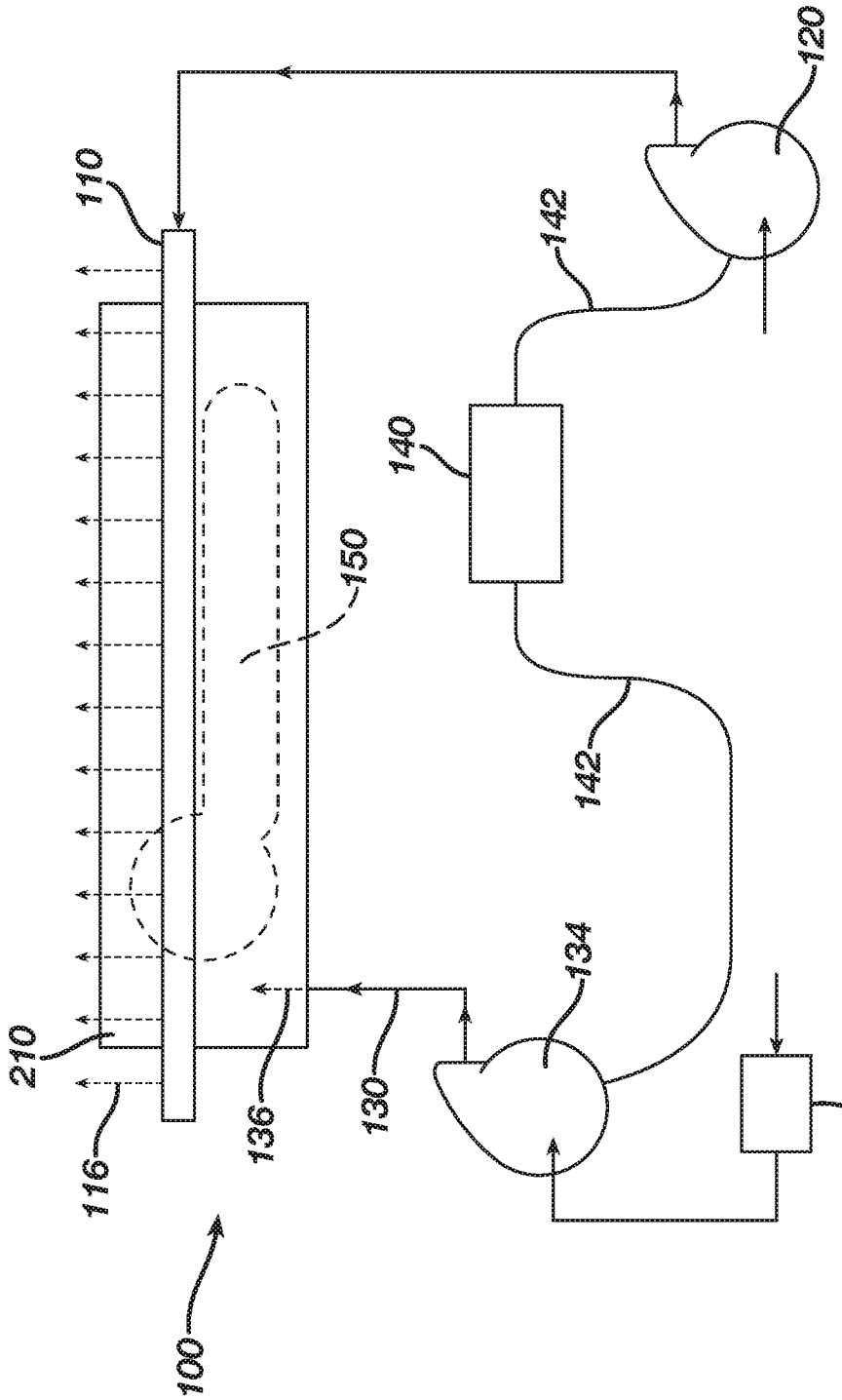

FIG. 4

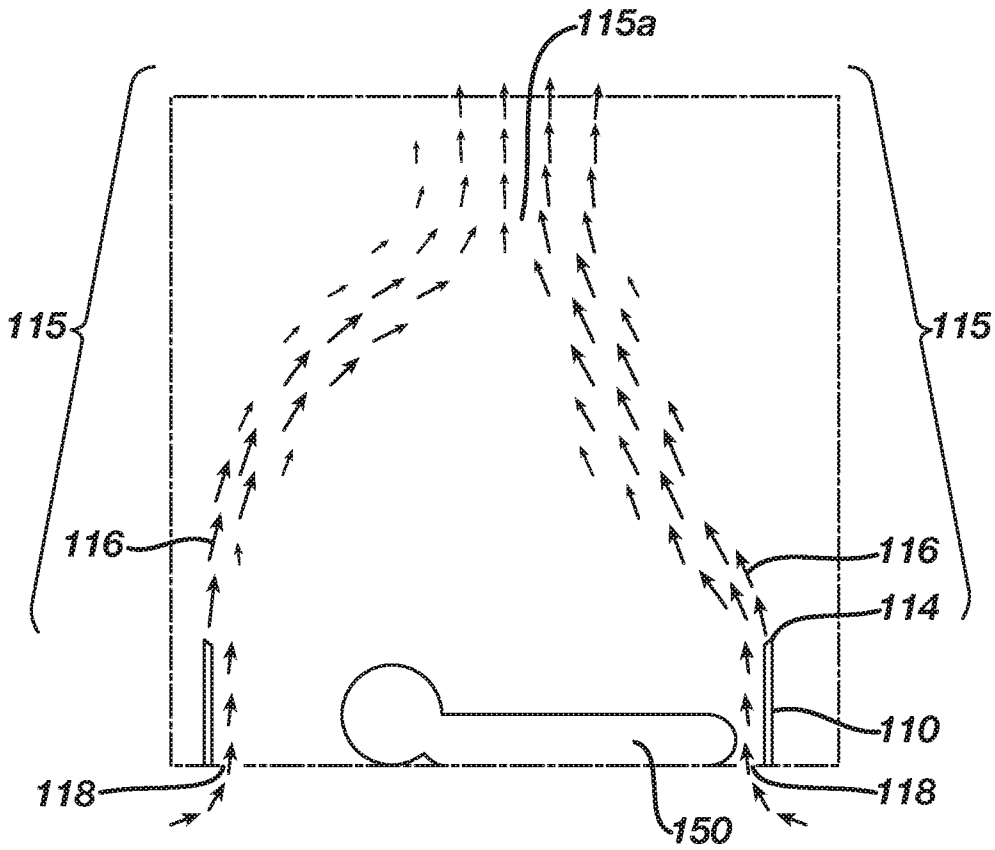

FIG. 5

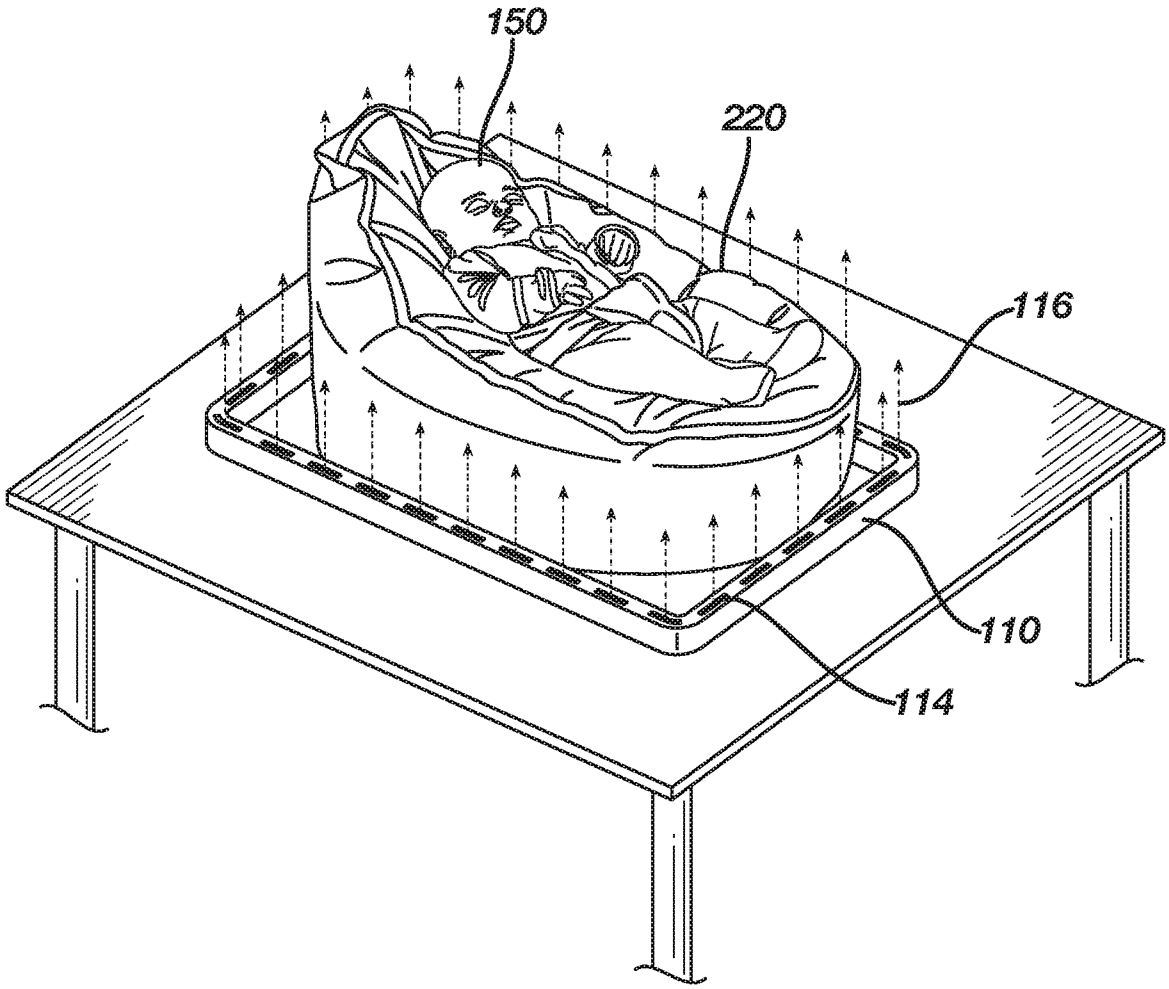

FIG. 6

INTERNATIONAL SEARCH REPORT

International application No
PCT/IB2016/001408

A. CLASSIFICATION OF SUBJECT MATTER
INV. B62B9/14 F24F9/00 F24F3/16
ADD.

According to International Patent Classification (IPC) or to both national classification and IPC

B. FIELDS SEARCHED

Minimum documentation searched (classification system followed by classification symbols)
B62B F24F

Documentation searched other than minimum documentation to the extent that such documents are included in the fields searched

Electronic data base consulted during the international search (name of data base and, where practicable, search terms used)
EPO-Internal, WPI Data

C. DOCUMENTS CONSIDERED TO BE RELEVANT

Category*	Citation of document, with indication, where appropriate, of the relevant passages	Relevant to claim No.
X	US 2002/143233 A1 (DONNELLY MICHAEL M [US] ET AL) 3 October 2002 (2002-10-03) abstract; figures 1-5 paragraphs [0025] - [0035]	1-10
A	WO 2007/108810 A1 (COVENANT PARTNERS INC [US]; MCKINNEY CECIL [US]) 27 September 2007 (2007-09-27) paragraphs [0003], [0008], [0012], [0013], [0036] - [0043]; figures 1,2,5	1-10
A	FR 2 123 102 A1 (CHRISTEL PAULE NICOLE ALBERTE [FR]) 8 September 1972 (1972-09-08) page 1, line 1 - page 3, line 6; figure 1	1-10
A	DE 42 41 233 A1 (STRAUBINGER GERHARD [DE]) 8 September 1994 (1994-09-08) abstract; figures 1-6	1-10

☐ Further documents are listed in the continuation of Box C.

☒ See patent family annex.

* Special categories of cited documents :

"A" document defining the general state of the art which is not considered to be of particular relevance

"E" earlier application or patent but published on or after the international filing date

"L" document which may throw doubts on priority claim(s) or which is cited to establish the publication date of another citation or other special reason (as specified)

"O" document referring to an oral disclosure, use, exhibition or other means

"P" document published prior to the international filing date but later than the priority date claimed

"T" later document published after the international filing date or priority date and not in conflict with the application but cited to understand the principle or theory underlying the invention

"X" document of particular relevance; the claimed invention cannot be considered novel or cannot be considered to involve an inventive step when the document is taken alone

"Y" document of particular relevance; the claimed invention cannot be considered to involve an inventive step when the document is combined with one or more other such documents, such combination being obvious to a person skilled in the art

"&" document member of the same patent family

Date of the actual completion of the international search	Date of mailing of the international search report
5 January 2017	19/01/2017

Name and mailing address of the ISA/	Authorized officer
European Patent Office, P.B. 5818 Patentlaan 2 NL - 2280 HV Rijswijk Tel. (+31-70) 340-2040, Fax: (+31-70) 340-3016	Salaün, Eric

INTERNATIONAL SEARCH REPORT

Information on patent family members

International application No
PCT/IB2016/001408

Patent document cited in search report	Publication date	Patent family member(s)	Publication date
US 2002143233 A1	03-10-2002	US 6709384 B1	23-03-2004
		US 2002143233 A1	03-10-2002
WO 2007108810 A1	27-09-2007	NONE	
FR 2123102 A1	08-09-1972	NONE	
DE 4241233 A1	08-09-1994	NONE	