United States Patent [19]

Okamoto et al.

[11] **Patent Number: 4,942,773**

[45] **Date of Patent: Jul. 24, 1990**

[54] **DEVICE FOR SAMPLING STEEL MATERIAL**

[75] Inventors: **Kaizo Okamoto; Akira Ichihara; Akimune Sato; Kenji Hirata; Katsuhisa Hirayama; Eiji Hina; Shigeru Nakaji; Minoru Sakamoto,** all of Kawasaki-dori Kurashiki; **Takashi Tanaka,** Kobe; **Keizo Shimizu,** Akashi, all of Japan

[73] Assignees: **Kawasaki Steel Corp.,** Hyogo; **Nippon Air Brake Co., Ltd.,** Kobe, both of Japan

[21] Appl. No.: **326,726**

[22] Filed: **Mar. 21, 1989**

Related U.S. Application Data

[62] Division of Ser. No. 79,142, Jul. 28, 1987, Pat. No. 4,833,930.

[30] **Foreign Application Priority Data**

Feb. 10, 1987 [JP] Japan 62-29370

[51] **Int. Cl.**[5] **G01N 1/08**

[52] **U.S. Cl.** **73/864.45;** 73/864.42; 73/863.91

[58] **Field of Search** 73/864.41, 864.42, 864.44, 73/864.45, 864.31, 863.91; 83/919; 356/313, 36

[56] **References Cited**

U.S. PATENT DOCUMENTS

715,631	12/1902	Ayres	73/864.44
2,837,155	6/1958	Cundiff et al.	73/864.31
4,116,069	9/1978	Lezgintsev et al.	73/864.31

FOREIGN PATENT DOCUMENTS

372471	3/1973	U.S.S.R.	73/864.45
491075	11/1975	U.S.S.R.	73/864.31
763729	9/1980	U.S.S.R.	73/864.31

Primary Examiner—Tom Noland

Attorney, Agent, or Firm—Bierman and Muserlian

[57] **ABSTRACT**

A cutting device for collecting a quantoback analysis sample in a hot state from a preferred position of a continuously cast steel piece is disclosed. According to this invention, a dish like recess is cut on the surface of a cast steel piece while leaving a center column, then the root of the center column is cut and the cut free portion taken out as a sample.

2 Claims, 14 Drawing Sheets

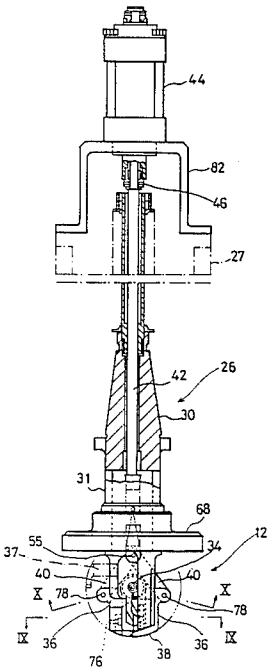

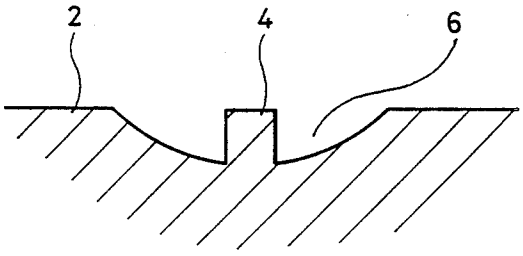

FIG.1 (a)

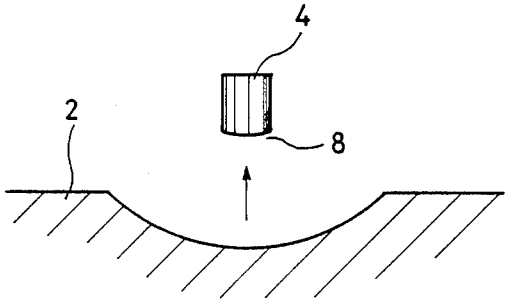

FIG.1 (b)

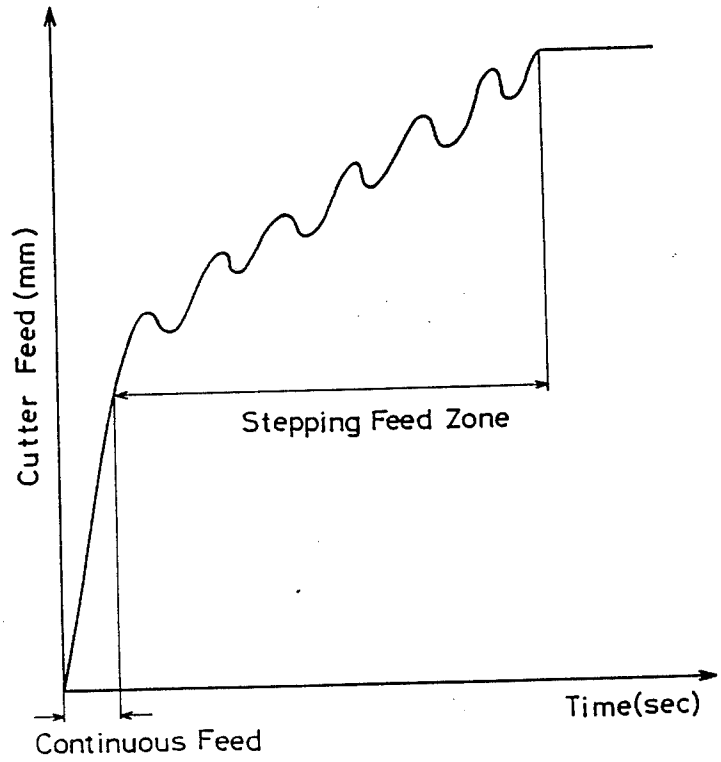

FIG. 2

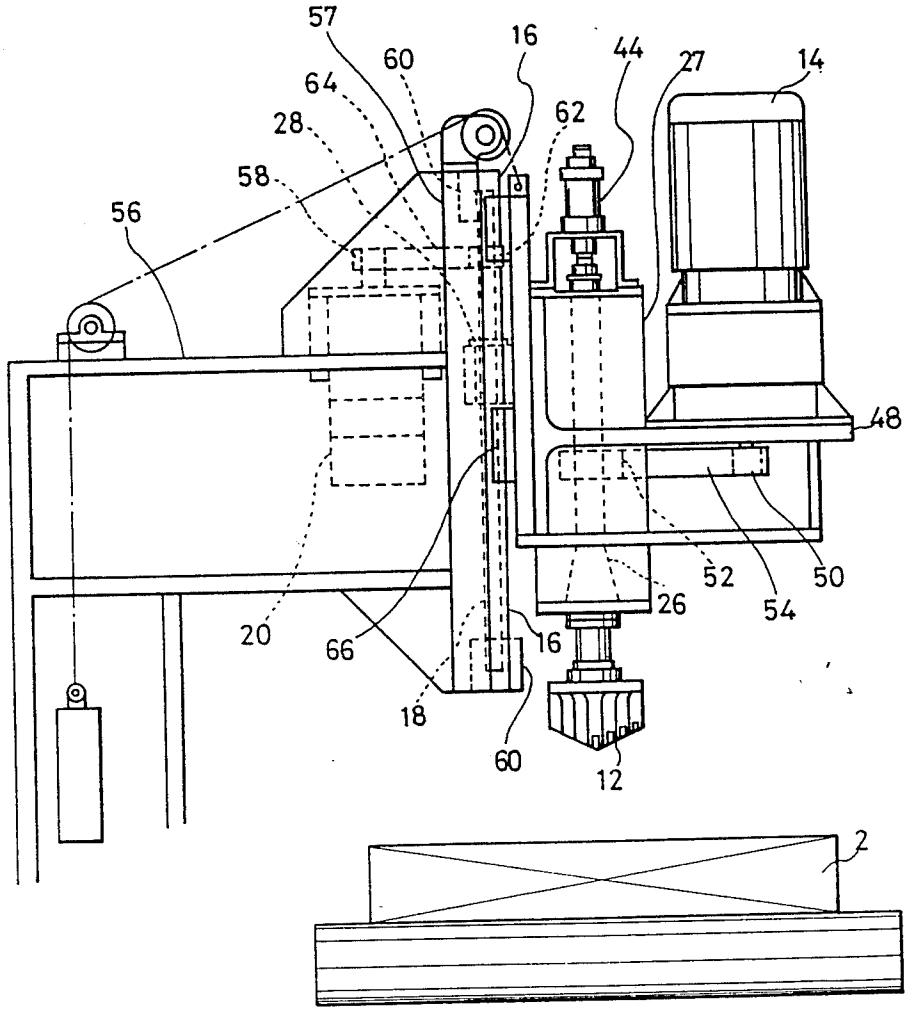

FIG. 3

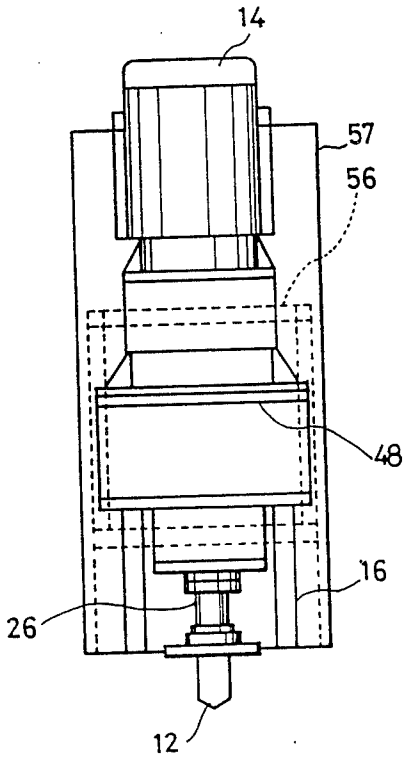

FIG. 4

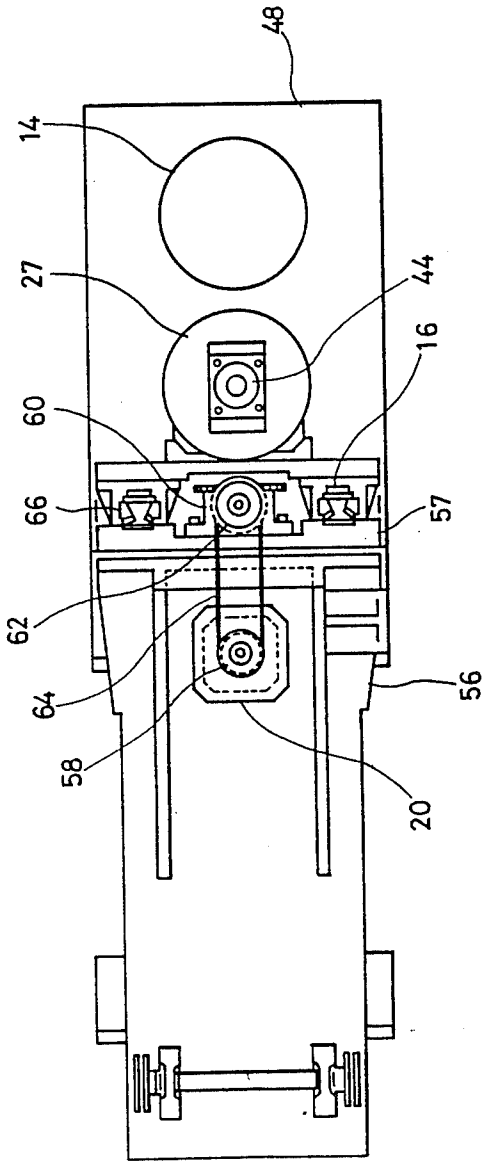

FIG. 5

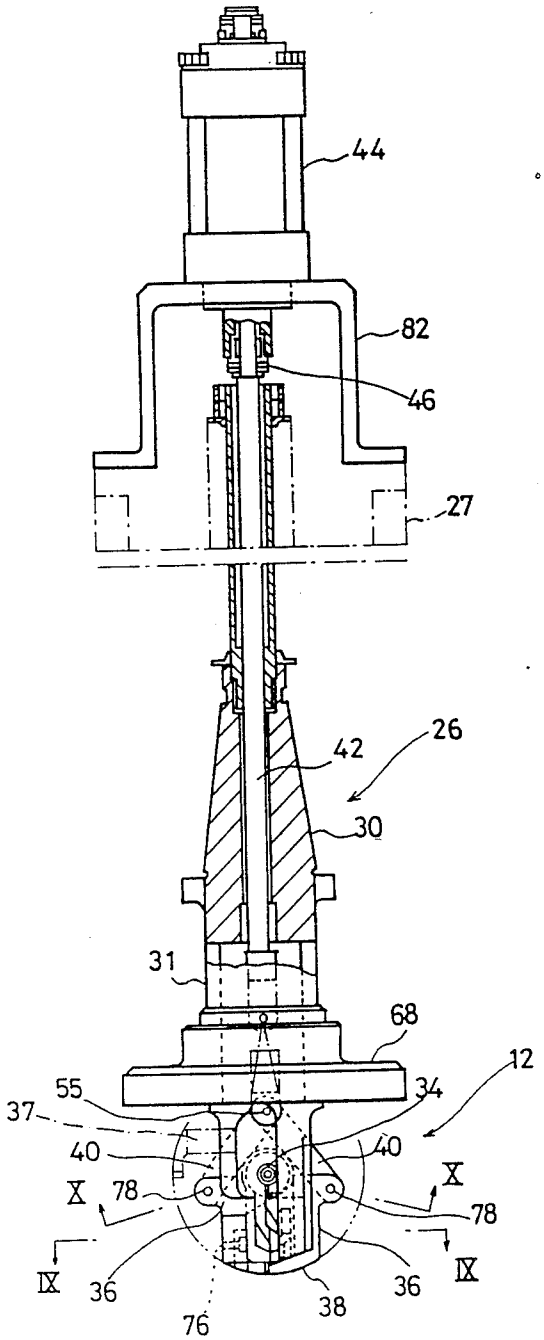

FIG. 6

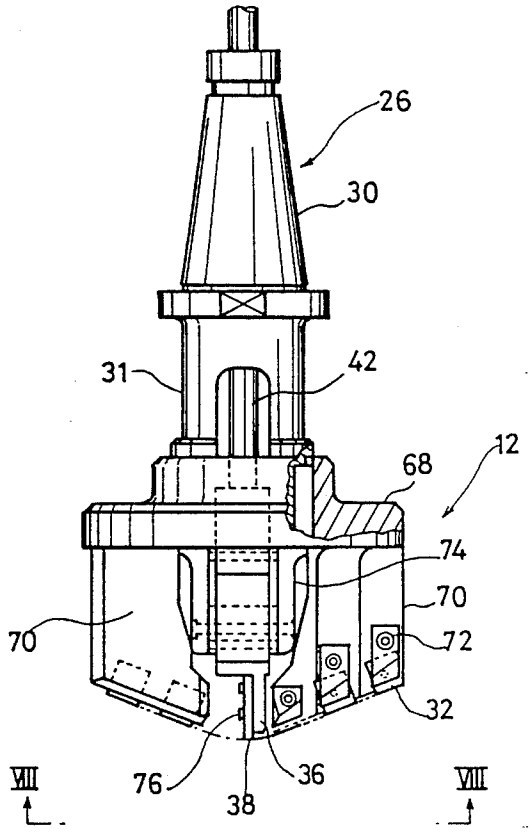

FIG. 7

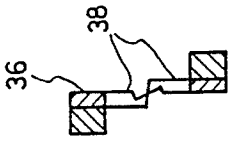

FIG.9

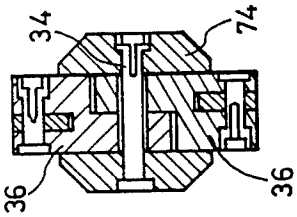

FIG.10

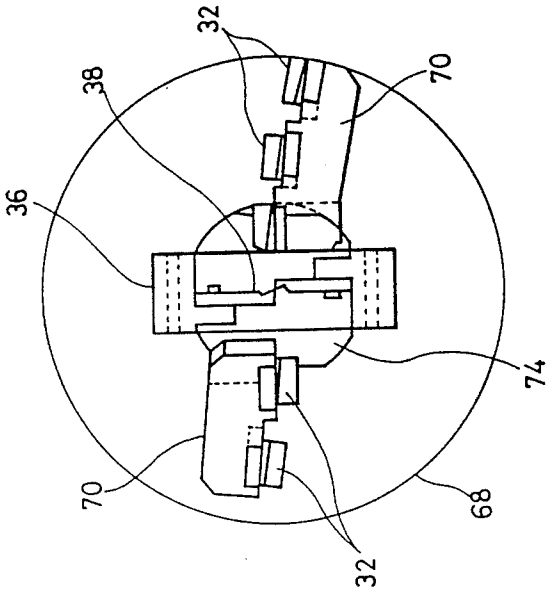

FIG.8

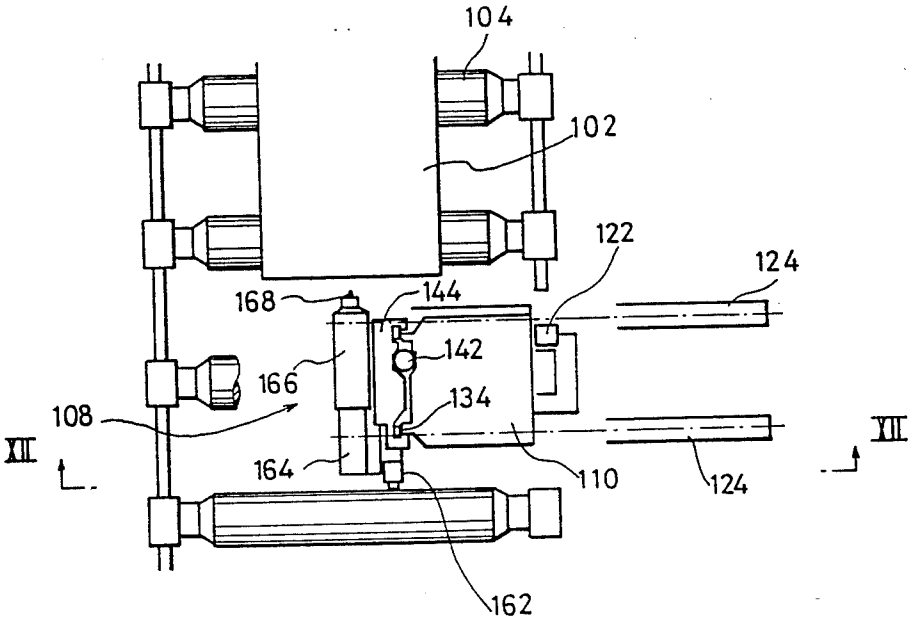

FIG. 11 (a)

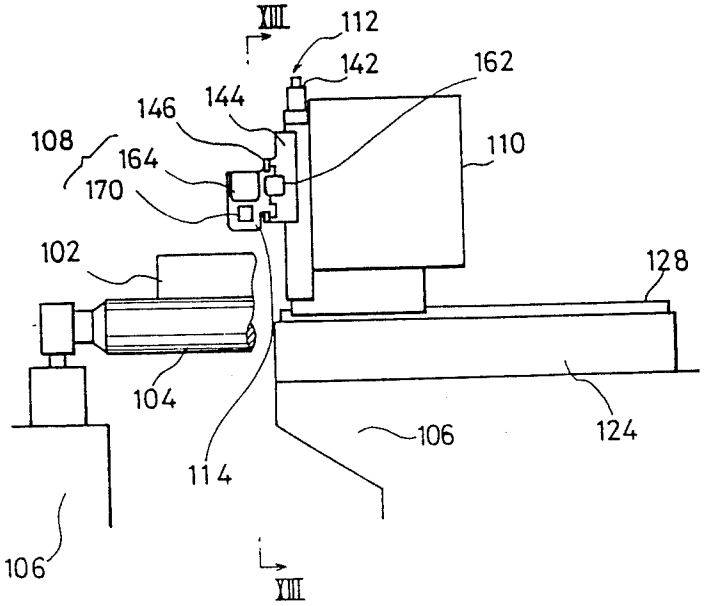

FIG. 11 (b)

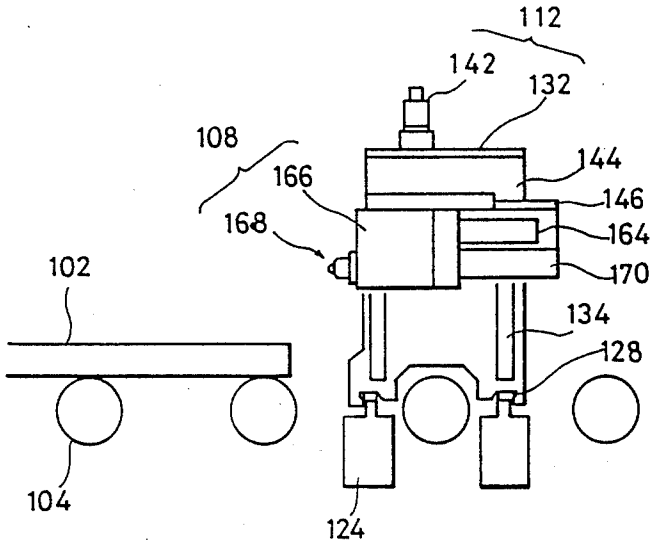

F I G. 12

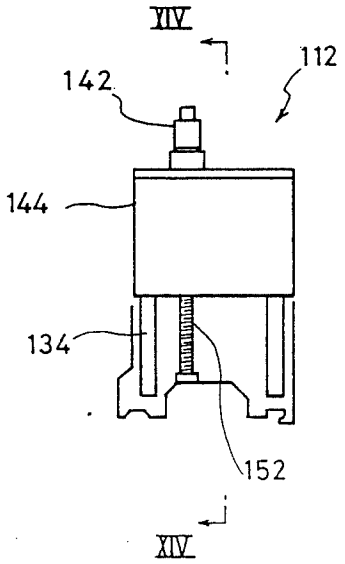

F I G. 13

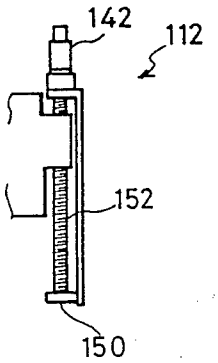

F I G. 14

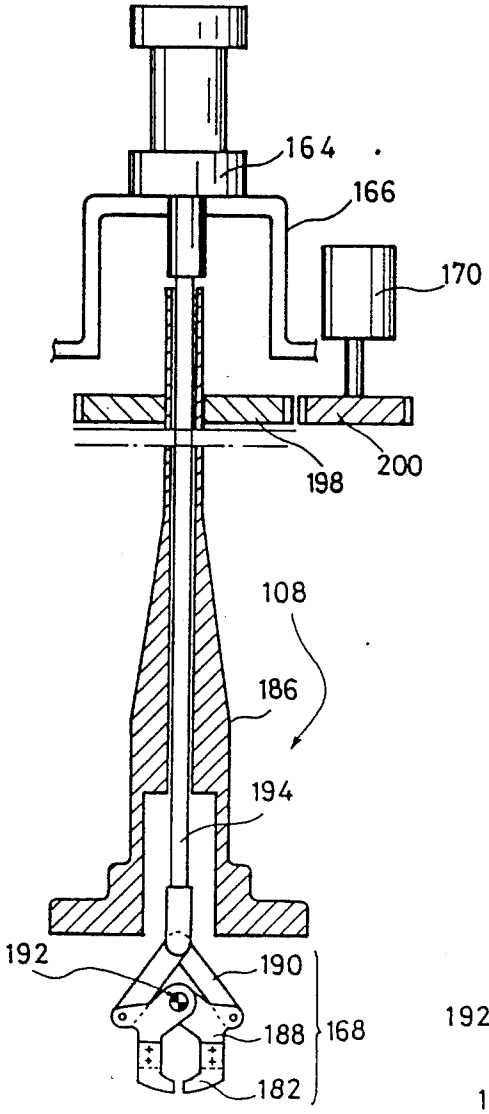
164
166
170
198
200
108
186
194
192
190
188
168
182

FIG. 16

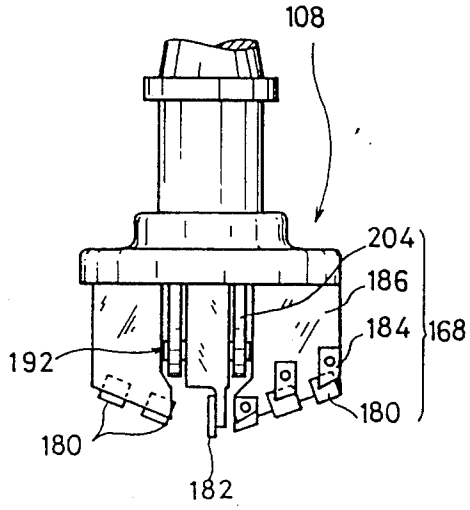
108
204
186
184
168
192
180
180
182

FIG. 15

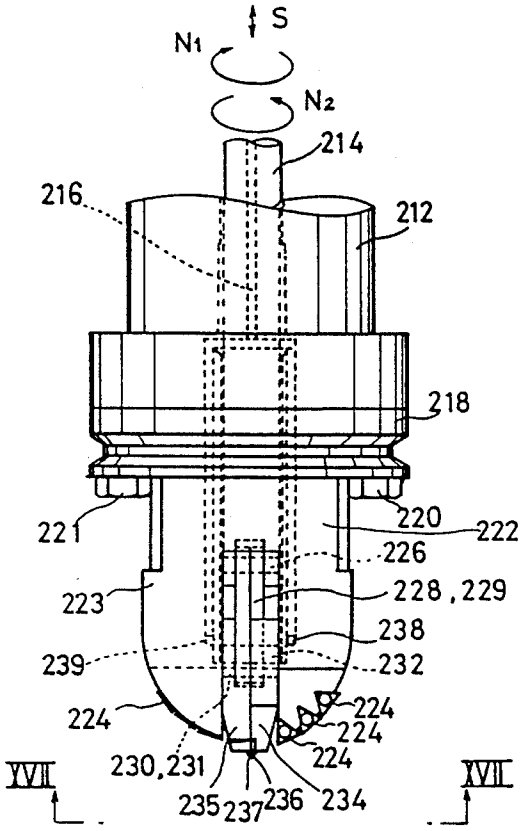

FIG. 17 (a)

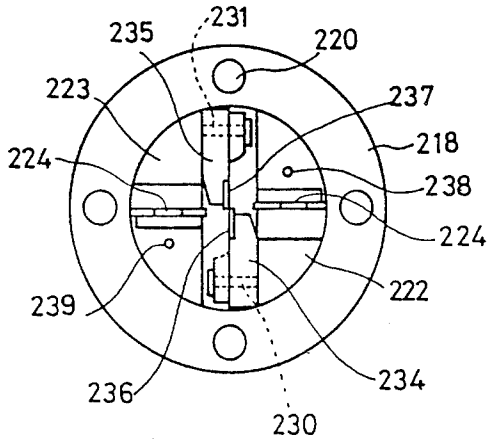

FIG. 17 (b)

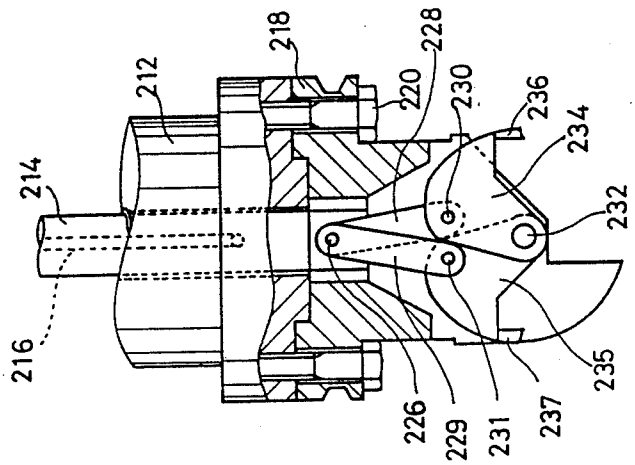

FIG. 17(d)

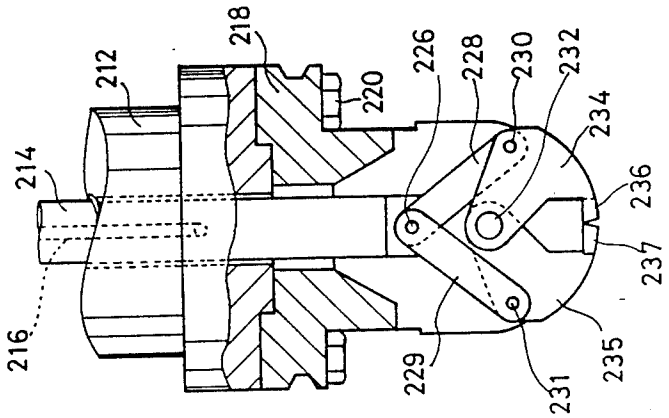

FIG. 17(c)

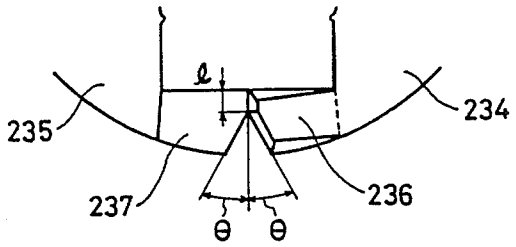

FIG. 18

DEVICE FOR SAMPLING STEEL MATERIAL

CROSS-REFERENCE TO RELATED APPLICATION

This application is a divisional application of the pending prior application Ser. No. 079,142 which was filed on July 28, 1987 and now U.S. Pat. No. 4,833,930.

BACKGROUND OF THE INVENTION

This invention relates to a device for sampling steel material and more particularly to a device for quickly sampling a composition analyzing specimen in a hot state from a preferred position on the surface of a continuously cast piece held at a high temperature.

In the continuous casting technology, the qualities (composition) of cast steel piece in a non-stationary part, e.g., in a junction part between different kinds of steel materials being continuously cast, should be noted at a high temperature state of the cast piece in view of energy conservatlon and high productivity, particularly when the hot charge or direct sequential rolling operation is intended.

However, no established technology was available for online collecting test samples from a preferred position of a hot cast steel piece, in the prior art. Therefore, offline sampling was practically used. Unfortunately, the offline sampling causes temperature drop of the cast steel piece, while traditional analyzing procedure using cut chips requires a long time for analyzing the components. Consequently, it was not possible to apply so-called hot charging to a furnace in which a red-hot, cast and cut steel piece, as conveyed from the casting machine, was directly transported into the heating furnaca for saving additional heating energy required for succeeding hot rolling process. In addition, it was also impossible to introduce the direct sequential rolling, as normally called, in which a red-heat, cast and cut steel piece was rolled directly or after being heated only at both ends whose temperature might drop more quickly.

Regarding the method of rapid component analyzing, there is known a quantoback system in which a small block specimen is prepared from steel material for spectro analyzing. According to the quantoback system, the quantometer (photoelectric directly reading type spectro-analyzer) is used for spectroanalysis. With this system, analyzed results can be indicated on a meter, after solving the inconveniency associated with conventional spectro-analyzers. Various types of the quantoback systems are available, such as production control models or research purpose models.

SUMMARY OF THE INVENTION

An object of the present invention is to provide a new device with which samples for the quantoback, in a diameter of 10 mm to 25 mm and a height of 10 mm to 25 mm in lump form, can be online collected from a preferred position of a cast steel piece maintained at a high temperature of 900 to 1200 degrees C.

Another object of the present invention is to establish a device for quickly sampling test specimens, for example within 150 seconds per position.

Still another object of the present invention is to offer a device, where created cut chips, in danger of high temperature and clogging the rotating shaft, etc. as continuously created during cutting work, can be discarded in safety.

Another object of this invention is to present an excellent practicing device in which, when the test sample is collected by laterally cutting the root of the sample at the end period of root-cutting operation, the laterally cut portion will not be ruptured by cutting force.

Furthermore, there is another object of the present invention that can provide a shape of the recess, remaining on the cast steel piece after completion of collectirg a sample, will not adversely affect the product qualities after rolling work.

Still another object of the present invention is to present a device that can easily achieve all methods above.

In order to accomplish the foregoing objects, the following technical means are introduced in the present invention.

(1) A lump-form sample is collected from the surface of steel material by high-speed cutting.

(2) A first process, where a recess like a dish-shaped groove ring leaving a cylindrical non-cut part at the center thereof is formed by cutting on a surface portion of steel material, is sequentially followed by a second process in which said cylindrical non-cut part, left at the center is cut at its root portion for separation.

(3) Cut chips created during cutting operation with steel material, especially with a high-temperature cast piece, has large ductility which lowers workability because cut chips are created in a continuous tape form. Therefore, so-called step feed operation is carried out for higher efficiency to discard cut chips, in which the cutting bit is fed while operating reciprocal motion in feeding direction, for separating cut chips in shorter sections.

(4) Said recess, left on the surface of the steel material after completion of sampling, is shaped in a gentle sloped shallow dish having a diameter larger than 6 times its depth.

The foregoing technical means of this invention provide the following functions. A sample for quantoback analysis can be collected from a preferred position on the surface of an online steel material maintained at high temperature by high-speed cutting. The said means of the present invention also realize the hot charge and the direct sequential rolling for continuously cast steel material. Other items, to be improved according to the scope of this invention, include significant improvement of quality control accuracies and higher degrees of energy saving and productivity.

BRIEF DESCRIPTIONS OF THE DRAWING

FIG. **1**(*a*) and FIG. **1**(*b*) show the processes of an embodiment of the present invention.

FIG. **2** shows a graph for the stepping feed in the first process of the present invention.

FIGS. **3** through **5** show a sampling device which can advantageously execute a method of this invention, while FIGS. **3** through **5** illustrating side, front and plan views, respectively.

FIG. **6** shows the side view of a cutting tool while FIG. **7** illustrating its front view.

FIGS. **8**, **9** and **10** shows the VIII—VIII view of FIG. **7**, IX—IX and X—X views of FIG. **6** respectively.

FIG. **11** (*a*) is the plan view of another embodiment of the sampling device based on the present invention.

FIG. **11** (*b*) shows its side view while FIG. **12** denoting XII—XII view of FIG. **11**(*b*).

FIG. 13 is the side view of a device for moving up/-down its cutting tool.

FIG. 14 is a view in arrow XIV—XIV of FIG. 13.

FIG. 15 is a vertical plan of the spot facing tool.

FIG. 16 shows a vertical plan of the root cutting tool.

FIG. 17 (*a*) indicates the general front view of a cutting tool based on further preferred embodiment of the present invention.

FIG. 17 (*b*) shows the view in arrows XVII—XVII.

FIG. 17 (*c*) illustrates a partial cutaway side view for showing open conditions of the root cutting tool.

FIG. 18 is a partial side view for illustrating conditions of completed root cutting with the root cutting tool.

DETAILED DESCRIPTION OF THE PREFERRED EMBODIMENTS

FIG. 3 through FIG. 5 show entire views of a device advantageously used for executing a method of the present invention. FIGS. 6 through 10 denote its partial details. An embodiment of this invention, using this device, will be described in detail as follows.

This device comprises a cutting tool 12 for cutting a cast steel piece, a motor 14 for driving the main shaft of cutting tool 12, a motor 20 for feeding cutting tool 12 in a manner of such as stepping feed, a tool post feed shaft 18 for the tool post driving system and a feed mechanism 28.

Main unit 27, comprising main shaft 26 of cutting tool (super-hard alloy tip) 12, is fixed in up/down rack 48 on which motor 14 for driving the main shaft is equipped. A belt 54 (or a chain may substitute) is set in a spanned manner between pulley 50 of main shaft driving motor 14 and pulley 52 mounted on main shaft 26. Cutting tool 12 is rotatingly driven by motor 14 according to the present invention. A hydraulic cylinder 44 is located on the upper end of main shaft 26.

On the other hand, a tool post feed shaft 18, with male screws, is rotatably borne by bearings 60 which are fixed in the upper and lower parts of support frame 56. In the upper part of said shaft 18, a pulley 62 is fixed. In addition, a cutting tool feed motor 20, available for forward and reverse rotations, is mounted on said support frame 57. A timing belt 64 (or a chain may substitute) is spanned between pulley 58 of motor 20 and pulley 62 for said tool post feed shaft 18. Thus, tool post feed shaft 18 is forwardly or reversely rotated by rotating forwardly or reversely tool feed motor 20, through pulley 58, belt 64 and pulley 62.

Tool post feed shaft 18, provided with male threads, is engaged with a feed mechanism 28 with female threads.

Feed mechanism 28 is integrated with up/down rack 48. Therefore, when tool post feed shaft 18 is forwardly or reversely rotated by motor 20, said up/down rack that supports main shaft driving motor 14 and cutting tool 12 is driven up or downward. Thereby, cutting tool can be fed up or down.

A guide rail 16 is provided in the vertical direction on both sides of support frame 57, for guiding a slide bearing 66 fixed on up/down rack 48. Thus, up/down rack 48 ran smoothly move up and down.

FIGS. 6 through 10 show the detail of cutting tool 12. Referring to FIGS. 6–10, a shank 30 is mounted in a taper hole (not illustrated) in main unit 27. In the lower part of body 31, connected to shank 30, a pair of cutting tool mounting bases 70 are arranged in a row in both sides of the center of flange 68. On the top of tip mounting base 70, a cutting tip (super-hard alloy tip) 32, for cutting a recess around the sample, is fixed with bolt 72.

According to the shown illustrations, three tips 32 are mounted on one tip mounting base 70 while two tips 32 being equipped on the other base 70. These tips are arranged with suitable intervals in radial direction to prevent discontinuation of cut recesses on the steel material.

A pair of bearings 74 is mounted in the lower part of flange 68 in such a position substantially orthogonal to said pair of tip mounting bases 70 (see FIGS. 8 and 10). while a pair of arms 36 being supported on bearings 74 through pins 34 in a freely rotatable manner. In addition, a root cutting tip (super-hard alloy tip) 38 is mounted at the top of each arm 36 by means of bolt 76. At the side end of each arm 36, one end of a pair of links 40 is connected by pin 78. The other end of link 40 is connected to the top part of rod 42 by means of pin 55.

A hydraulic cylinder 44 is supported on the uppar portion of main shaft 26 by means of support frame 82. This hydraulic cylinder 44 is connected to rod 42.

Cutting tip 32 is used to cut dish type ring form recess groove 6 of FIG. 1 (*a*). Cutting tip 32 rotates around center axis of the cutting shaft while cutting. Referring to FIG. 2, the cutting tip is fed up to the surface of cast steel piece at high speed and further fed reciprocally stepping while cutting, thereby easily cutting dish type ring recess groove 6 with a cylindrical sample 4 for analysis left at the center of the groove.

A cutting tip 38 for sample 4 remained in the above in cylindrical form is provided with arm 36 that can open and close to from position 37 around pin 34. The cutting tool consists of a root cutting tip 38 fixed on arm 36, a link 40 for rotating arm 36, a rod 42 for moving link 40 up and down and a hydraulic cylinder 44 for moving up and down rod 42. A composite needle bearing 46 is equipped on the piston rod of hydraulic cylinder 44, for bearing thrust.

The present invention is embodied using the foregoing components. First, recess groove 6 is cut around the cast steel piece 2 as shown in FIG. 1 (*a*). At this time hydraulic cylinder 44 pulls up rod 42 while arm 36 escaping in a position 37 (see FIG. 6). In this state, main shaft 26 is rotated by motor 14 while feeding in steps to cut recess groove 6 around sample 4 shown in FIG. 1 (*a*) in specified depth.

Next, feeding is stopped and, while main shaft 26 being rotated, hydraulic cylinder 44 is operated to gradually push down rod 42 to located arm 37 to position 36 (FIG. 6) while piercing sample cutting tip 38 into the root (root cutting part 8 shown in FIG. 1 (*b*) of sample 4 for root cutting the sample.

After completion of cutting sample root cutting part 8, the rotation of main shaft 26 is stopped while driving feed mechanism 28, tool post feed shaft 18 and tool feed motor 20 with tip 38 still holding the sample, thereby driving up main shaft 26. then the sample collecting device is moved to a specified position where rod 42 is pulled up by means of hydraulic cylinder 44 while opening arm 36 to release holding of sample 4 that is thus collected. (See FIG. 1(*b*)).

Now another embodiment of the present invention is described in detail as follows.

The preferred second embodiment comprises a tool device 108, a main body 110 that moves in horizontal direction orthogonally to the running direction of roller table 104, an up/down device 112 that drives tool device 108 in the up/down direction and a horizontal

drive device **114** that moves horizontally in the running direction of roller table **104**.

Referring to FIGS. **15** and **16**, tool device **108** comprises a tool post **166**, a tool **168**, a tool rotating device **170**, a sample cutting drive device **164**, tips **180**, **182**, a tip holder **186**, etc. The functions of tool device **108** is described together with cutting process. Sampling comprises processes of face cutting and root cutting.

First the face cutting process is described. Tip **180** of face cutting tool is fixed on tip holder **186** by means of tip holder **184**. Tip holder **186** is connected to rotating device **170** through gears **198**, **200**. Therefore, tip holder **186** ls rotated by starting up rotating device **170**. Then, a dish recess is face cut leaving a center portion, on the cut end part of cast piece **102** by driving horizontal drive device **162** of FIG. **11**.

Next, when specified cutting namely face cutting is completed, root cutting drive device **164** is activated with tip holder **186** held still in face cutting completion state (position). With root cutting drive device **164** activated, root cutting tip **182** takes a state of FIG. **16** while performing root cutting at the root of the sample. Driving force of root cutting is transmitted from root cutting drive device **16** to tip **182** through connecting rod **194**, link **190** and root cutting tip holder **188**. Link **190** drives tip **182** to move with a rotating center of root cutting link pin **192** mounted on root cutting pin holder **204** supported by bit holder **186**. As described above, rotating force for cutting is obtained from rotating device **170** while root cutting drive force being available from root cutting drive device **164**.

Next, the device for driving the tool device is described in the following.

Main body **110**, mounted rotatably in horizontal direction orthogonal to the direction of running for roller table **104**, is placed on slide face **128** of rail rack **124** installed on foundation **106**. The entire system is driven out of and inside of the installation line of roller table **104** by means of horizontal drive device **122**.

Up/down drive device **112**, for moving up and down tool device **108**, is shown in FIGS. **13** and **14** which illustrate XIII—XIII view of FIG. **11** (*b*) and XIV—XIV view of FIG. **13**, respectively. Up/down drive device **142** moves up and down moving block **144** on slide face **134** mounted on main unit **110** by rotating screw bar **152**. Screw bar **152** is supported by bearings **150**. Accordingly, tool device **108** is driven up and down.

Referring to FIGS. **11** and **12**, tool device **108** is driven horizontally in the same way by means of horizontal drive device **162** along slide face **146** mounted on moving block **144**.

Under the configuration described above, sampling with the embodiment of the present invention is carried out as follows.

Cast steel piece **102**, as cast by a continuous casting machine, is cut to preferred lengths, conveyed to the position of this sampling device and then stopped. Accuracies for stopping, operated in the above, are normally similar to those (plus/minus 30 mm) ordinary roller table **104**. Sampling device, waiting outside of the line of roller table, is moved into the scope of the table by means of horizontal drive device **122** and adjusted to positions t/4 and t/2 where t represents a thickness of cast steel piece, in the up/down direction of the tip under the control of up/down drive device **142**, for preparing sampling operation to be done at the end face of cast piece **102**. Next, the sampling device carries out cutting operation while moving bit tip onto the end face of the cast piece, by being driven with horizontal drive device **162**. After completion of cutting, the sampling device is operated in the procedure reverse to the above and returns back in place for waiting. Collected sample is maintained in tip holder **186** and root cutting holder **188**, and then discharged in the waiting position to another device while completing sampling operation.

Another advantageous embodiment of the present invention is described in the following. Embodiment **3** is provided with a modified tool. FIG. **17** (*a*) shows a front view of the cutting tool based on the present invention. FIG. **17** (*b*) shows the XVII—XVII arrow view. FIG. **17** (*c*) denotes a state with the root cutting tip held closed, in a side view. FIG. **17** (*d*) relates to the side view for showing opened root cutting tip.

Main shaft **212**, on which the bit is mounted, drives cutting tool unit **218** and face cutting tool mounting frame **222**,**223** fixed onto said unit in the N_1 direction by a rotating power drive whose illustration is omitted herein. Rod **214**, for driving rooting cutting tip frames **234**, **235**, can rotate simultaneously with the forward and reverse rotations in N_1 and N_2 of main shaft **212**, while also being movable in up/down direction in stroke S.

Cutting tool unit **218** is mounted onto main shaft **212** by means of bolts **220**, **221**. Frames **222**, **223** on which facing bits having tips of semi-spherical shape are fixed, are securely mounted on cutting tool unit **218**. Pairs of said facing tips **224** are oppositely mounted on said facing tip frames **222**, **223**. In FIG. **17** (*a*), three tips are mounted in one side, namely a total of 6 tips.

Referring to FIG. **17** (*c*), rod **214** is connected to arms **228**, **229** by means of pin **226**, while connecting root cutting bit frames **234**, **235** onto arms **228**, **229** by means of pins **230**, **231**. Root cutting tip frames **234**, **235** are fixed on facing tip frames **222**, **223** by pin **232** with root cutting tips **236**, **237** mounted on frames **234**, **235** for root cutting. With the foregoing structure, root cutting tip frames **234**, **235** freely move from root cutting state of FIG. **17** (*c*) to the escape condition of FIG. **17** (*d*) when rod **214** is moved in the direction of stroke S in relation to main shaft **212**.

There is a passage **216** communicated to the top of bit unit **218** passing through rod **214**, for supplying the bit with cutting oil and air. Holes **238**, **239** are provided for supplying the cutting device with cutting oil and air.

Referring to FIG. **17**(*b*), facing tip **224** in the side of cutting oil supply holes **238**, **239** comprises a space deprived of quadrant parts, while facing tip frames **222**, **223** being installed in the quadrant parts left in the side opposite to cutting oil supply holes **238**, **239**, said facing frames **222**, **223** being prepared for mounting facing tip **224**. Therefore, facing tip **224** is mounted in such a manner that cut chips, created during facing operation and discharged by facing tip **224**, are led through the space deprived of quadrant parts.

In addition, root cutting tips **236**, **247** are also mounted on root cutting tip frames **234**, **235** in such a manner that cut chips are discharged in the direction to said space.

Now detailed devices for mounting the cutting tool, driving the tool and processed cast steel piece, etc. are illustrated because no specified positional relations are required.

Now the procedure for operating the cutting tool device of the present invention is described as follows. For facing operation, refer to FIG. **17** (*d*). Root cutting

tips **236, 237** are pulled upwardly in escape position, then facing tip **224** is placed in contact with the upper face of cast steel piece, although not illustrated, thus main shaft **212** being rotated forwardly in N_1 direction.

The entire main shaft assembly is fed in this state onto the cast steel piece. Meanwhile, the steel piece is cut by facing tip **224** while discharging cut chips into the space without quadrant parts contained in the bit tip, namely into the side of cutting oil supply holes **238, 239** shown in FIG. **7** (*b*), thus performing smooth cutting operation. When facing work proceeds completely with a degree of specified depth, main shaft **212** is once stopped together with returning main shaft **212** slightly. For next operation, refer to FIG. **17** (*c*). While main shaft is rotated in the N_2 direction, reverse to N_1, rod **214** is pulled up in such a direction that root cutting tips **236, 237** are closed. Thus, root cutting tips **234, 235** are sequentially clcsed by means of pin **226**, arms **228, 229**, pins **230, 231**, root cutting bit frames **234, 235** and pin **232**, while cutting off the root of faced sample. At that time, cut chips, as discharged from root cutting tips **236, 237**, are flowed into the side of cutting oil supply holes **238, 239** shown in FIG. **17** (*b*), namely the space without quadrant parts. Thereby, smooth cutting is assured.

According to conventional systems known in the prior art, the end of root cutting operation was processed in such a manner that root cutting tips **236, 237** were totally kept in contact with the sample. In consequence, when the root of the sample, remaining uncut, because small, this uncut column is broken by the cutting force of the root cutting bit while leaving a small stud on the cut sample, like the pin of a spinning top. At the same time, cut chips also remain on this uncut column, together with long whiskers adhering on the cut sample. These whiskers used to disturb smooth collection of cut sample or smooth encasing of cut chips into trash box.

According to a principle of this invention for preventing such troubles as described above, a marginal part of about 1 to 2 mm length is left on each tip of root cutting tips **236, 237** as far as no troubles are caused for strength of said tips **236, 237**. In addition, the relief of an angle of about 15 degrees to 45 degrees by 20 is provided at the top of each marginal part. Thus, said uncut column is no longer left at the end period of root cutting, while also completely free from adhesion of cut whiskers.

The present invention brings about the following effects.

(a) Great energy saving effect is achieved because sampling operation can be performed in hot state with cast steel piece.

(b) Online sampling is enabled while forming the sample in a cylindrical shape which can be quantoback analyzed. Results can also be obtained more quickly than any other methods known in the prior art. Time to completion of the analysis becomes about 1/100 as long as the time required for conventional systems. In addition, sampling work can be completed within 150 seconds. Thus, no cast steel pieces remain unexamined in the process.

(c) Drilling work for sampling, required in conventional methods using warm pieces (at about 100 degrees C.) is no longer required, resulting in higher safety of operator at work.

(d) Automatic sampling work is enabled yielding excellent labor saving.

(e) After completion of collecting sample, only a dish-like recess which may be vanished during subsequent rolling is left on the surface of cast steel piece. Therefore, the piece can be rolled flat in next process, while reducing the affect of the trace of sampling onto product qualities thereby increasing yield of the product.

(f) The present invention is advantageously applied to collecting samples for analyzing cast steel produced by the continuous casting system, used for the hot charge, etc. In addition, this invention is also applicable to sampling other types of steel materials. However, it should be noted that the stepping feed is not always required unless the ductility of cut chips is high for steel material in use.

(g) Sample, after collection, is free from cut chips or uncut column adhering or remaining. Accordingly, the sample collecting device based on the present invention can be operated automatically. Thereby, samples can be gathered automatically and online from hot cast steel pieces.

What is claimed is:

1. A device for sampling a block sample directly from the surface of a continuously cast steel piece on a roller table, comprising:

a cutting tool device consisting of an inverted mountain type facing tip that cuts the surrounding of a cylindrical center portion into dish form while leaving said cylindrical center portion uncut, and a curved lever type tip for cutting the root of said cylindrical center portion, said inverted mountain type facing tip and said curved lever type tip being set on the same holder, a center axis of said holder being located horizontally and parallel to a running direction of said roller table, and

a moving device for moving said cutting tool device when in a free position in any of 3 orthogonal directions, namely (A) horizontally parallel to, (B) horizontally rectangular to and (C) perpendicular to the direction of running of said roller table.

2. The device of sampling of claim **1** wherein a marginal part of 1 to 2 mm length is left on each tip for cutting the root of the cylindrical center portion and a relief of an angle is provided at the top of each marginal part.

* * * * *