United States Patent [19]

Robjent et al.

[11] **Patent Number: Des. 282,095**

[45] **Date of Patent: ** Jan. 7, 1986**

[54] **ROLLER SKATE**

[75] Inventors: **Frederick B. Robjent,** Orchard Park, N.Y.; **Reuben B. Klamer,** La Jolla, Calif.

[73] Assignee: **The Quaker Oats Company,** Chicago, Ill.

[**] Term: **14 Years**

[21] Appl. No.: **578,488**

[22] Filed: **Feb. 9, 1984**

[52] **U.S. Cl.** **D21/226**

[58] **Field of Search** ..... D21/226, 227; 280/11.1 R, 11.19, 11.20, 11.27, 11.28

[56] **References Cited**

U.S. PATENT DOCUMENTS

3,302,954	2/1967	Elwell	280/11.19
3,649,038	3/1972	Huckenbeck	280/11.19
4,304,417	12/1981	Hsieh	280/11.19
4,468,045	8/1984	Sarazen	D21/226

Primary Examiner—Charles A. Rademaker
Attorney, Agent, or Firm—Cumpston & Shaw

[57] **CLAIM**

The ornamental design for a roller skate, substantially as shown and described.

DESCRIPTION

FIG. **1** is a perspective view of a roller skate taken from the right front and showing our new design;
FIG. **2** is a left-side elevational view thereof, the right side being substantially a mirror image thereof, except for the uppermost portion which is shown in FIG. **1;**
FIG. **3** is a rear elevational view thereof; and
FIG. **4** is a bottom plan view thereof.

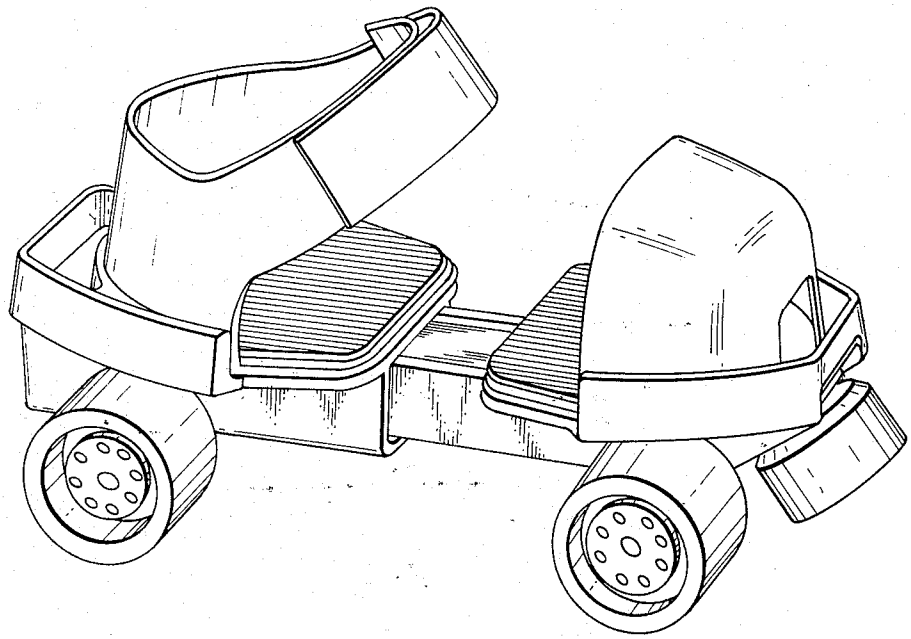

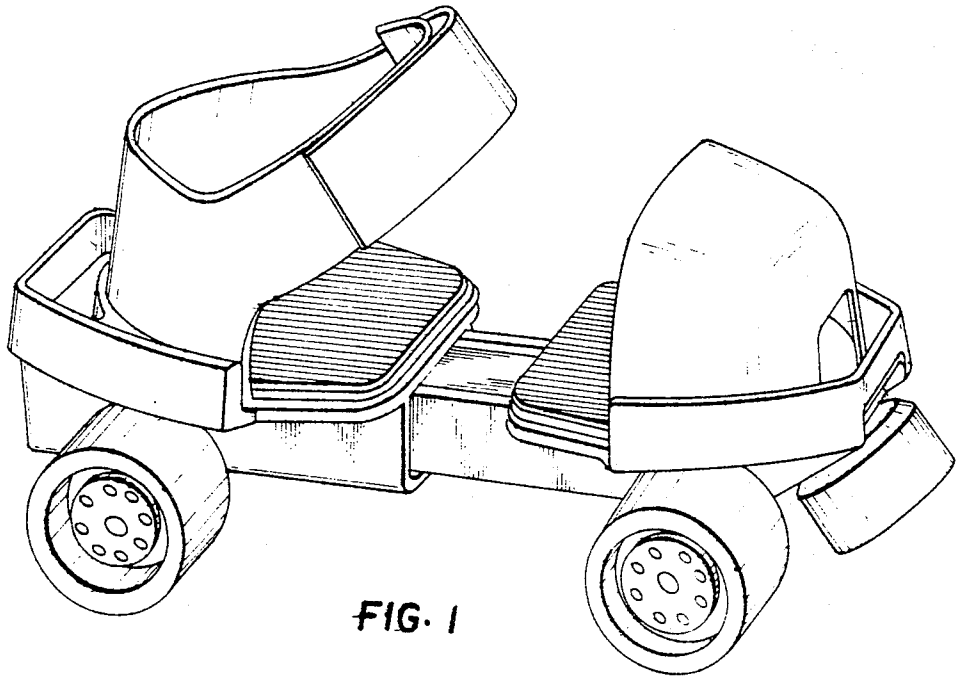

FIG. 1

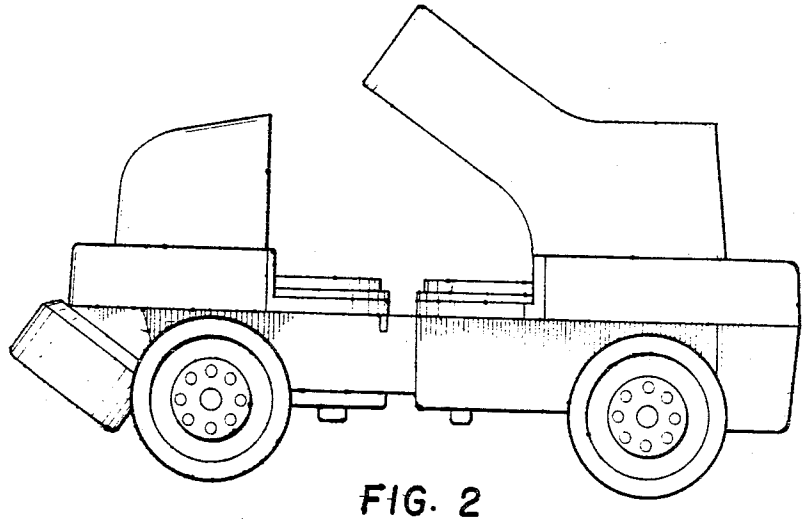

FIG. 2

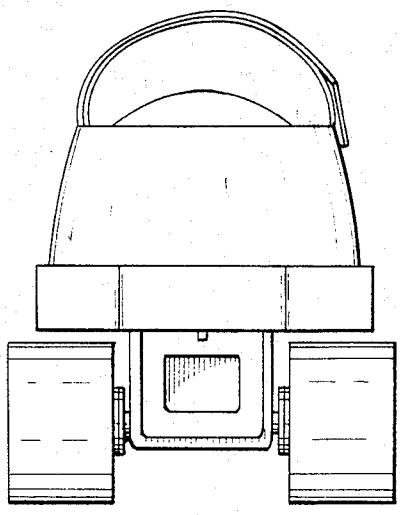

FIG. 3

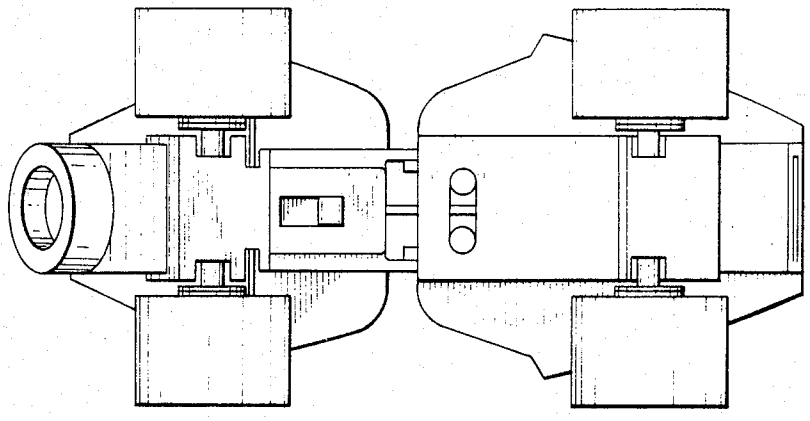

FIG. 4