Aug. 11, 1936. R. A. GORDON ET AL 2,050,605

AIR FILTER FOR FLUES

Filed June 28, 1935

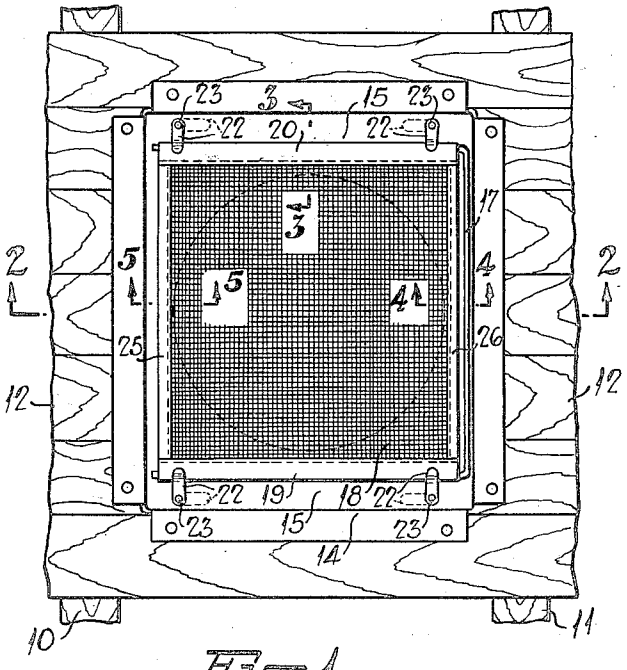

Fig. 1

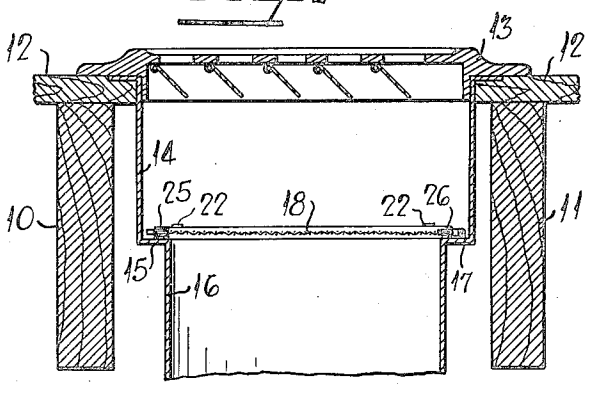

Fig. 2

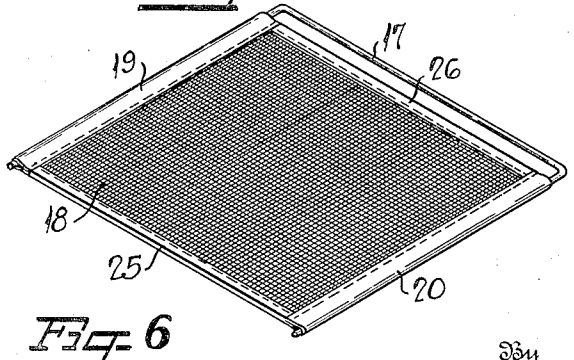

Fig. 6

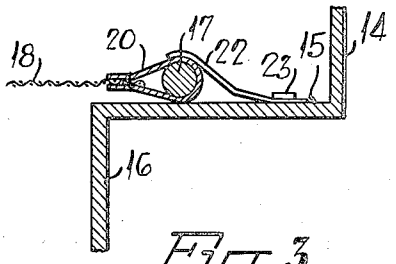

Fig. 3

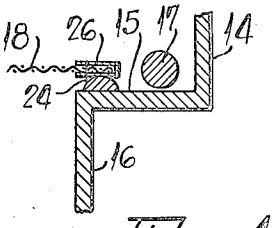

Fig. 4

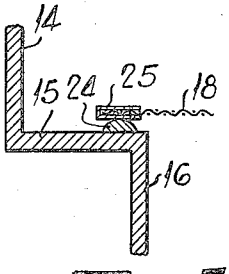

Fig. 5

ROBERT A. GORDON
AND
RALPH H. FALLS
Inventors

By James S. Eaton

Attorney

Patented Aug. 11, 1936 2,050,605

UNITED STATES PATENT OFFICE

2,050,605

AIR FILTER FOR FLUES

Robert A. Gordon and Ralph H. Falls,
Gastonia, N. C.

Application June 28, 1935, Serial No. 28,909

1 Claim. (Cl. 183—74)

This invention relates to an apparatus for removing impurities from air which is circulated in flues such as the heated air distributed from hot air furnaces throughout a building and also in flues through which air is drawn into a building for conditioning purposes and in fact in any air flues having air passed therethrough.

It is an object of this invention to provide a renewable filter adapted to be inserted into an air flue and more especially a filter made of a textile material such as loose mesh canvas or cloth and the like, so as to permit passage of air therethrough but which will cause the dust, soot or other foreign matter in the air passing through the flue to become lodged on the sheet of textile material. When the sheet of textile material becomes laden with dust, dirt, soot and other foreign matter, it can be quickly removed from the frame carrying the same and a new piece inserted thereon and inserted in the flues so that at all times the filter will be very effective in removing the foreign particles from the air passing through the flue.

Some of the objects of the invention having been stated, other objects will appear as the description proceeds when taken in connection with the accompanying drawing, in which:—

Figure 1 is a top plan view of the apparatus installed immediately beneath a grille in an outlet for a hot air pipe with the grille removed;

Figure 2 is a vertical sectional view taken along the line 2—2 in Figure 1;

Figure 3 is an enlarged sectional detail view taken along the line 3—3 in Figure 1;

Figure 4 is an enlarged detail view taken along the line 4—4 in Figure 1;

Figure 5 is an enlarged sectional detail view taken along the line 5—5 in Figure 1;

Figure 6 is a perspective view of the screen and the holding means therefor.

Referring more specifically to the drawing, the numerals 10 and 11 indicate sleepers or joists for supporting a floor 12 in a building. The outlets for a hot air heating system usually have grilles 13 disposed on the top surface of the floor. This grille has communicationg therewith a square pipe 14 which in the present instance is shouldered as at 15 to a restricted or smaller pipe 16 and in the present instance the filter is adapted to be supported on the ledge 15. This filter comprises U-shaped wire member 17 which is adapted to have slid thereover a filter 18 which is preferably of canvas or loosely woven textile material and has bindings 19 and 20 along the ends thereof through which the prongs of the U-shaped member 17 are adapted to be inserted. The bindings 19 and 20 may be formed from lapping the ends of the sheet of textile material 18, or it can be placed thereon in the form of binding as shown in Figure 3. A plurality of springs or buttons 22 are pivotally mounted on rivets 23, so that when in the full line position as shown in Figures 1 and 3 the screen will be held in position as shown in Figure 1, and when turned to dotted line position (Fig. 1) the filter or screen can easily be removed for cleansing or for installing a new sheet of textile material 18. The bindings 19 and 20 rest directly on the ledge 15 but since there is a slight clearance between the other edges of the sheet 18 and the ledge 15, means are provided in the form of half-round members 24 which are secured on the upper side of ledge 15 to support the edges of the filter 18 which are not engaged by the U-shaped member 17.

The sheet of textile material has a suitable binding 25 and 26 on the sides which are not hemmed for the reception of the U-shaped member 17 so that these bindings may rest on the half-round members 24. These bindings 25 and 26 as well as bindings 19 and 20 are preferably made of fire-proof material.

In the drawing and specification there has been set forth a preferred embodiment of the invention, and although specific terms are employed, they are used in a generic and descriptive sense only, and not for purposes of limitation, the scope of the invention being set forth in the appended claim.

We claim:

In combination, a flue, a rectangular casing, joined to one end of the flue and having greater overall dimensions than the flue to form a ledge surrounding the end of the flue, a filter adapted to rest on said ledge to completely cover the said end of the flue, said filter comprising a U-shaped wire member provided with a sheet of textile material provided with hems at opposed sides thereof forming passageways for the legs of the U-shaped member and a pair of buttons secured to said casing and adapted to be turned to overlap the legs of said U-shaped member to hold the U-shaped member and the filter in position over the end of said flue.

ROBERT A. GORDON.
RALPH H. FALLS.