E. L. WATROUS.

SASH LOCK.

APPLICATION FILED DEC. 13, 1905.

972,959. **Patented Oct. 18, 1910.**

Fig. 1.

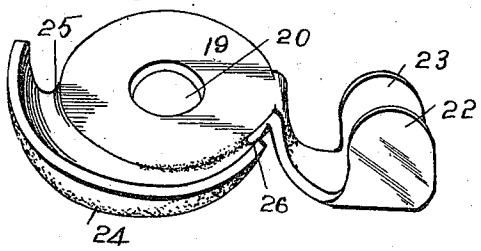

Fig. 2.

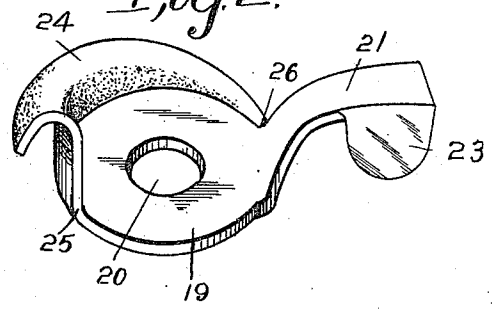

Fig. 3.

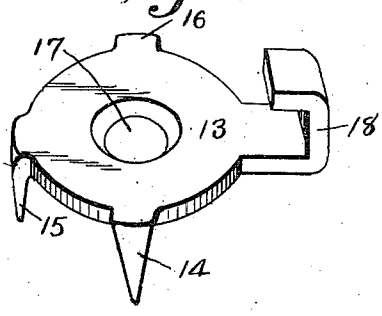

Fig. 4.

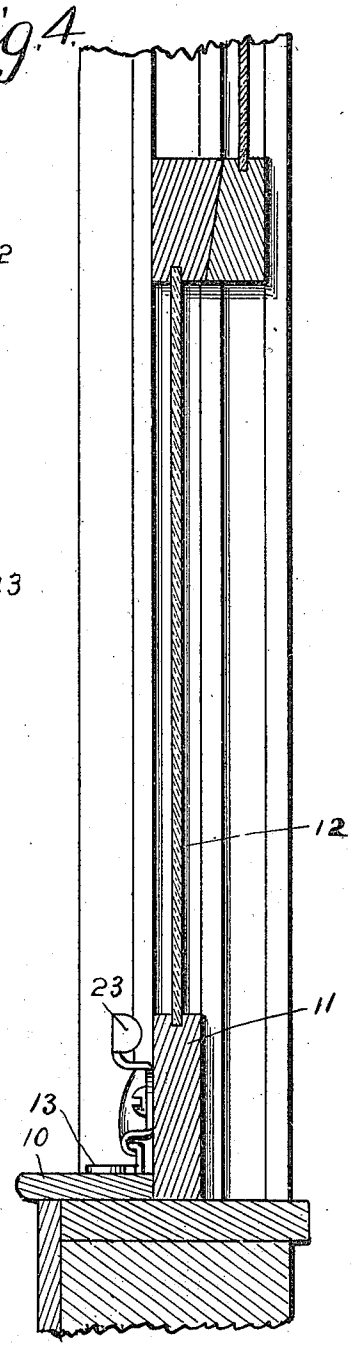

Witnesses
A. G. Hague
S. F. Christy.

Inventor E. L. Watrous
by Owing & Lane attys

THE NORRIS PETERS CO., WASHINGTON, D. C.

UNITED STATES PATENT OFFICE.

EDWARD L. WATROUS, OF DES MOINES, IOWA.

SASH-LOCK.

972,959. Specification of Letters Patent. Patented Oct. 18, 1910.

Application filed December 13, 1905. Serial No. 291,637.

To all whom it may concern:

Be it known that I, EDWARD L. WATROUS, a citizen of the United States, residing at Des Moines, in the county of Polk and State of Iowa, have invented a certain new and useful Sash-Lock, of which the following is a specification.

The objects of my invention are to provide a sash lock of simple, durable and inexpensive construction which operates not only to maintain the sash of a window securely in a closed position, but also serves to draw the sash, to which it is secured, toward its extreme limit of closed movement, and to draw the window frame rigidly against the catch which it abuts in a closed position.

My invention consists in certain details in the construction, arrangement and combination of the various parts of the device, whereby the objects contemplated are attained, as hereinafter more fully set forth, pointed out in my claim and illustrated in the accompanying drawings, in which—

Figure 1 is an inverted, perspective view of the movable cam which forms a portion of my lock. Fig. 2 is a perspective view of the same portion of the device as shown in Fig. 1. Fig. 3 is a detail perspective view of the hooked keeper which engages the cam, and Fig. 4 is a vertical sectional view of the lower sash of a window with my device attached to it and in a locked position.

Referring to the accompanying drawings, I have used the reference numeral 10 to indicate a window sill, the numeral 11 to indicate the lower sash of the window frame, and the numeral 12 to indicate the glass portion of said frame. I have provided a keeper which is designed to be engaged by the cam, which comprises a body portion 13 having downwardly extending prongs 14, 15 and 16 which are designed to be driven into the sill or other part of the window frame, or to the window itself, to maintain the keeper against lateral or rotary movement when it is secured in position by means of a screw passing through an opening 17 in the central portion of the body 13. Extending outwardly, upwardly, and then inwardly from the body portion 13 of the keeper and diametrically opposite from the prong 15 is a hook 18 designed to be engaged by the cam, hereinafter described. My keeper is formed complete of a single piece of sheet metal.

Designed to be attached to the frame or the sash of the window is a cam, depending upon whether the keeper is attached to the sash or the window, as the cam is attached to the opposite of these two parts to which the keeper is attached. This cam comprises a body portion 19 having an opening 20 through which a screw is passed for securing the cam to the part to which it is to be attached. Extending outwardly from one side of the cam is a handle 21, having two downwardly extending lugs 22 and 23 which make this handle of convenient shape for use. Extending upwardly, then curved outwardly and downwardly is a curved lug 24 which starts at a point adjacent to the inner end of the handle 21 and extends from this point upwardly and around the opposite side of the body portion 19 from the handle 21 to the point 25, the diameter of this curved portion being at a minimum at the point 26 where it is adjacent to the handle 21, and increases in diameter to a maximum at that end of it which is farthest away from the handle 21. This curved lug is so shaped that it will first engage the hook 18 at its open end; that is the end of it which is of the greatest diameter, and as the entire cam is moved around by the handle 21, the curved lug 24 will cause the hook 18 and the curved lug 24 to be brought securely into contact and hold the parts, to which they are secured, firmly in position relative to each other, and against any rattling of the parts. In other words the lug 24 is hook-shaped in cross-section and is tapered or gradually reduced in size from its end 25 to its end 26. From this it follows that when the lug 24 is engaged with the hook 18 in the manner described, the outer portion of the lug 24—*i. e.*, the portion farthest from the center of the cam, will draw the cam down toward the sill on which the keeper is secured to complete the closing movement of the sash 11, while the bight of the lug, which from the end 25 to the end 26 gradually approaches the center of the cam, will draw the sash 11 laterally against the edge of the sill 10 and in that way make the closure very tight.

By the use of the above construction, the parts to which the keeper and the cam are attached will be locked rigidly in position relative to each other by rotating the cam. The shape of the keeper and cam are such that the parts to which they are to be attached will not only be thrown downwardly

or upwardly past each other, as the catch may be placed, but also inwardly and toward each other.

Having thus described my invention, what I claim and desire to secure by Letters Patent of the United States, therefor is—

In a sash lock, the combination of a keeper having a body in which is a central aperture, a hook 18 on the edge of the body, and prongs disposed at right angles to the body and extending from the edge thereof, and a rotatable cam arranged at a right angle to the keeper and having a lug of hook-shape in cross-section which describes a part of a circle and is tapered or gradually reduced in size from one of its ends to the other.

EDWARD L. WATROUS.

Witnesses:
SIDNEY F. CHRISTY,
W. R. LANE.