Sept. 4, 1934. J. P. FARNAM 1,972,187

LAMP POST

Filed Aug. 29, 1932

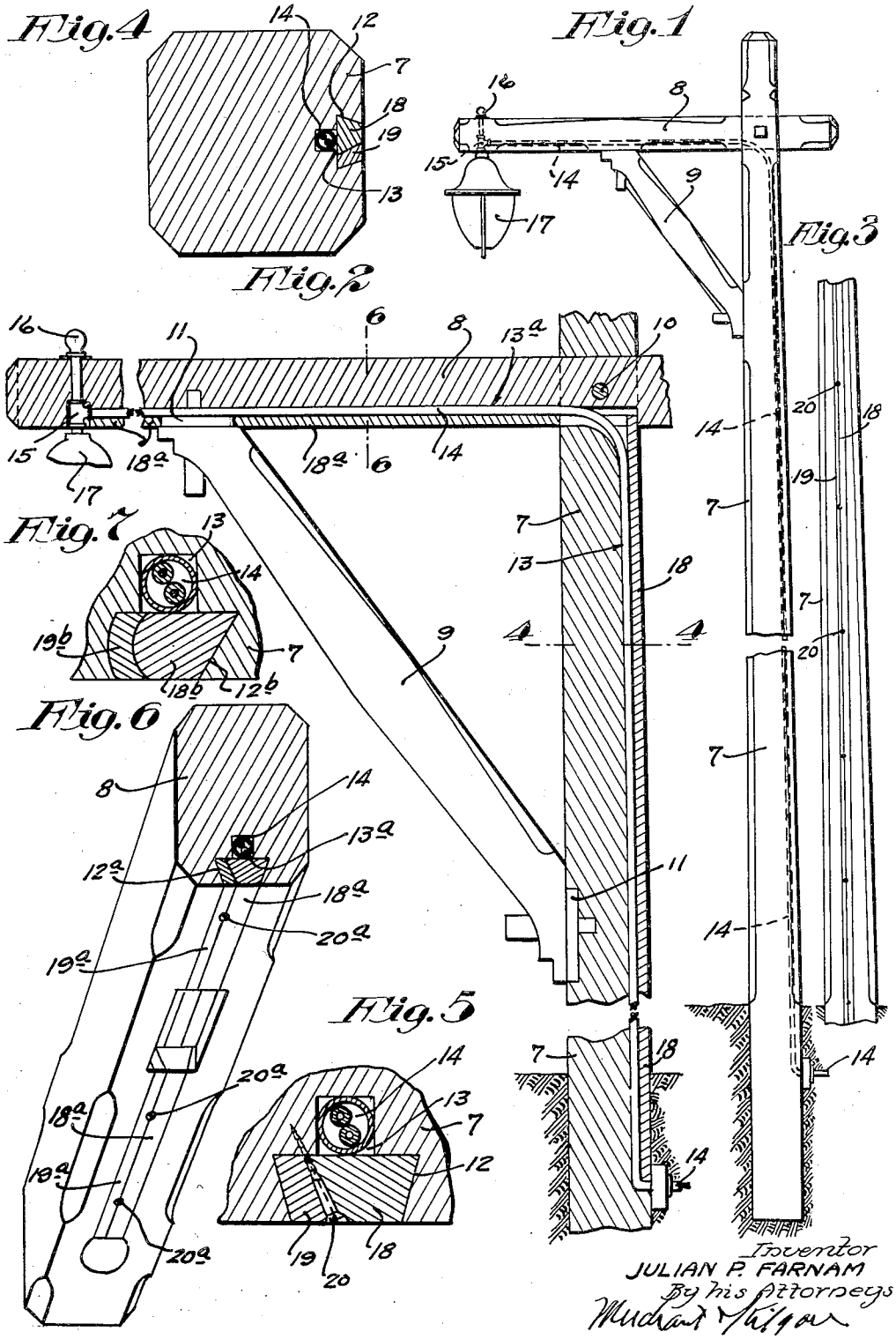

Patented Sept. 4, 1934

1,972,187

UNITED STATES PATENT OFFICE

1,972,187

LAMP POST

Julian P. Farnam, Minneapolis, Minn., assignor, by mesne assignments, to Page & Hill Co., Minneapolis, Minn., a corporation of Delaware

Application August 29, 1932, Serial No. 630,767

5 Claims. (Cl. 247—1)

My invention relates to improvements in lamp posts of wooden structure such as are desirable for use along illuminated parkways and other highways. Generally stated, the invention consists of the novel construction, arrangement and combinations of parts hereinafter described and defined in the claims. Particularly, the invention is directed to improved means for forming cable chases on conduits for wooden posts equipped with electric lamps.

The invention is illustrated in the accompanying drawing wherein like characters indicate like parts throughout the several views.

Referring to the drawing:

Fig. 1 is a side elevation;

Fig. 2 is an enlarged side elevation of the post with parts broken away and with some parts in vertical section;

Fig. 3 is a rear elevation of the upright portion or post proper of the complete lamp post, some parts being broken away;

Fig. 4 is a horizontal section taken on the line 4—4 of Fig. 2;

Fig. 5 is a fragmentary enlarged section taken on the same line as Fig. 4;

Fig. 6 is a perspective showing the outer portion of the arm of the post sectioned on the line 6—6 of Fig. 2; and

Fig. 7 is a fragmentary section on the same line as Fig. 5 illustrating a slightly modified construction.

The body of the post is indicated by the numeral 7, the arm by the numeral 8 and the arm brace by the numeral 9, which parts are wooden members which, for ornamental purposes, will usually have hand-adzed surfaces. The cross arm 8 is narrower than the post 7 and is extended through a mortice formed therein and is anchored thereto by a pin 10 preferably also a wooden member. The brace 9 at its obliquely cut ends, is formed with tenons 11 fitted into the seats formed in the post 7 and arm 8. The post 7 at its back side is formed with a longitudinally extended dove-tailed groove 12 and inward thereof with a narrower longitudinal groove or chase 13 that forms a conduit for a cable 14 that contains the wires that lead from a point under ground to the electric lamp presently to be noted. At its upper extremity the dove-tailed groove 13 and conduit-forming groove 14 terminate at the under side of the arm 8 and join, respectively, with a correspondingly formed dove-tailed groove 12ª and conduit-forming groove 13ª formed in the under side of the arm 8. Here it will be noted that the conduit-forming groove 13ª extends above the upper tenon 11 of the upper brace 9 while the dove-tailed groove 12ª is intercepted or divided by said upper tenon 11. This permits the horizontal upper portion of the cable 14 to be extended to a point near the outer extremity of the arm 8 where said cable is joined by a T-coupling 15 or the like to the stem 16 of an electric lamp 17. Said stem 16 extends through the arm 8 and is suitably secured thereto.

To close the dove-tailed groove 12 and house-in the vertical portion of the cable 14, a wooden wedge structure is employed. This wooden wedge structure, as preferably designed, comprises two wooden members, to wit: a wooden filler strip 18 and a wooden key 19, which when assembled, completely fill the dove-tailed groove 12, see Figs. 4 and 5. The filler strip 18 is a dove-tailed member while the key 19 is a supplement thereto and is preferably slightly tapered inwardly in horizontal cross-section. In placing the complete wedge in position, the member 18 is first located in the groove 12 and then the member 19 is pressed or forced into position, which action, however, does not require much pressure. To securely hold the assembled wedge structure in the post, a plurality of screws 20 are used and these are preferably passed into the body of the post through the joint formed between the wedge members 18 and 19. Fig. 3 shows an assembled wedge structure 18—19 positioned and held by the screws 20.

The dove-tailed groove 13ª and the arm 8 is closed by a wedge structure preferably substantially identical with the wedge structure 18—19, and is made up of a wooden filler strip 18ª and a wooden key 19ª, that correspond respectively to the members 18 and 19. In the arm 8, however, the filler strip 18ª and key 19ª are extended first between the post and the upper tenon 11 and then between said tenon and the coupling 15 of the outer portion of said arm. The filler strip 18ª and key 19ª are held in position by screws 20ª applied in the same manner as the screws 20.

The groove and wedge structure described affords a highly efficient means for concealing the cable within the post and arm. Such structure can be made at comparatively small cost and be very quickly assembled either at the factory or at the place of assemblage, and moreover, the wedge structure does not mar the post but may be embedded into the same in such a way that it may be scarcely perceptible.

A preferred arrangement has been illustrated in the drawing and specifically described, but it may be understood that modifications may be

made within the scope of the invention herein disclosed and claimed.

The slightly modified structure of Fig. 7 is like that illustrated in the other views and best shown in Fig. 5, except that the groove 12^b that receives the wooden wedge structure is rounded at one side and both sides of the key member 19^b are rounded to fit one rounded side of the filler strip 18^b.

In this arrangement, the walls of the wedge 18^b are preferably parallel or, in other words, concentric, so that the wedge, while removable, will not be accidentally removed. If greater security were desired, brads or nails or the like might be driven through the outer portion of the key 19^b into the strip 18^b.

What I claim is:

1. A wooden post having a longitudinally extended wedge-receiving groove and inward thereof a narrower cable-receiving chase, a wooden wedge structure filling said groove and closing said cable-receiving chase, said wedge structure comprising a dove-tailed filler strip and a supplemental key, and displaceable metallic anchors normally holding said structure in place.

2. The combination with a wooden post and a wooden arm extended therefrom, one side of said post and one side of said arm having conduit-forming and filler-receiving grooves in communication at the junction of said post and arm, and wooden fillers closing said wedge-receiving grooves in said post and arm to enclose a cable within said post and arm, the filler closing the groove in the post being removable to afford access to the groove in the arm.

3. The structure defined in claim 2 in which said wooden fillers comprise dove-tailed filler strips and co-operating supplemental keys, said supplemental keys being tapered in cross-section, and removable anchors removably holding the key in the post in an operative position.

4. The structure defined in claim 2 in further combination with an oblique wooden brace connecting said post to said arm and having a tenon inserted into the under side of said arm below the conduit-forming groove of the latter, but between sections of the wooden fillers that close the filler-receiving groove of said arm.

5. A wooden post having a longitudinally extended wedge-receiving groove and inward thereof a narrower cable-receiving chase, and a wooden wedge structure filling said groove and closing said chase, said wedge structure comprising a dove-tailed filler strip convexly curved on one side, and a supplemental key concavely curved on one side and convexly curved on the other side.

JULIAN P. FARNAM.