(No Model.) 2 Sheets—Sheet 1.

C. I. HALL.

ELEVATOR GEARING.

No. 590,722. Patented Sept. 28, 1897.

Fig. 1.

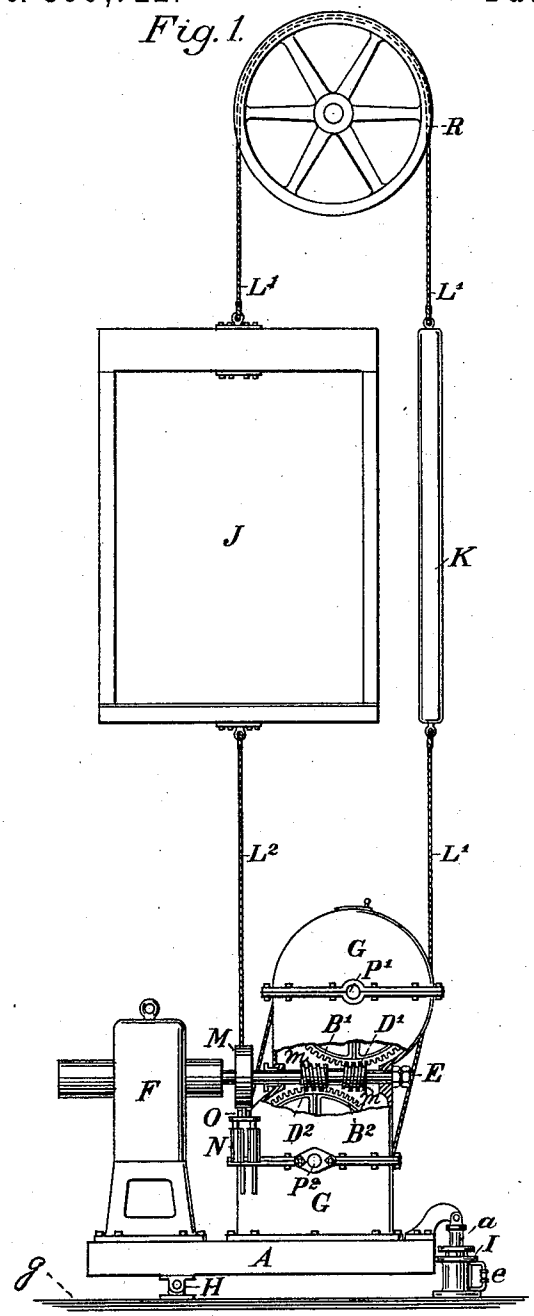

Fig. 2.

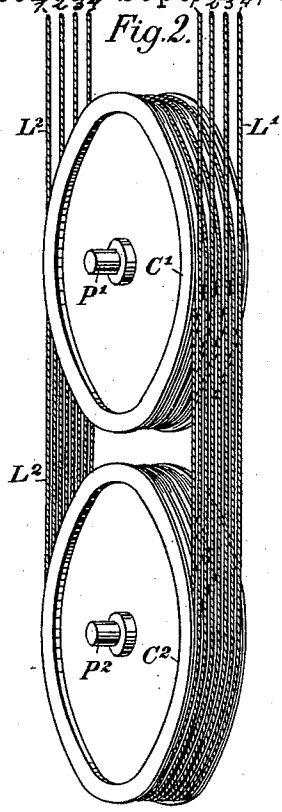

Fig. 3

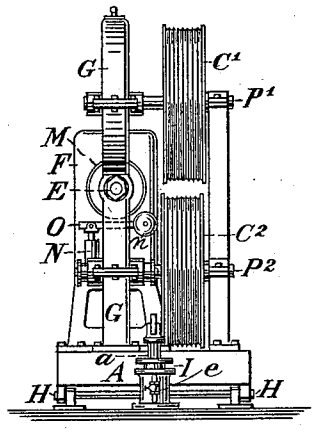

Witnesses:

E. A. Brandau.

Wilson D. Bent, Jr.

Inventor:

Hosea I. Hall

By John Richards Atty

THE NORRIS PETERS CO., PHOTO-LITHO., WASHINGTON, D. C.

(No Model.) 2 Sheets—Sheet 2.

C. I. HALL.

ELEVATOR GEARING.

No. 590,722. Patented Sept. 28, 1897.

Fig. 4

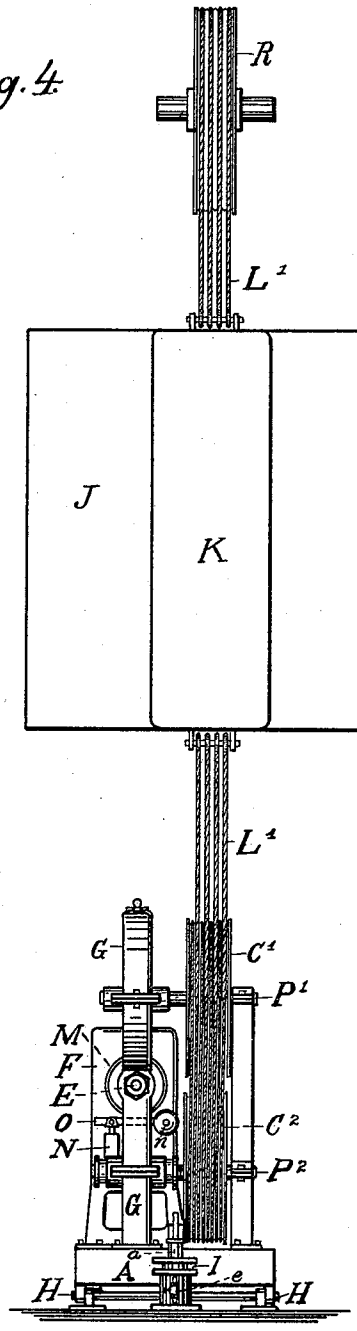

Witnesses
E. A. Brandau
Wilson D. Bentje.

Inventor
Isaac I. Hall
By his Attorney John Richards

THE NORRIS PETERS CO., PHOTO-LITHO., WASHINGTON, D. C.

UNITED STATES PATENT OFFICE.

COFRAN I. HALL, OF SAN FRANCISCO, CALIFORNIA, ASSIGNOR TO THE CAHILL & HALL ELEVATOR COMPANY, OF CALIFORNIA.

ELEVATOR-GEARING.

SPECIFICATION forming part of Letters Patent No. 590,722, dated September 28, 1897.

Application filed March 21, 1895. Serial No. 542,687. (No model.)

To all whom it may concern:

Be it known that I, COFRAN I. HALL, a citizen of the United States, and a resident of the city and county of San Francisco, State of California, have invented certain new and useful Improvements in Elevators or Hoisting and Lowering Apparatus for Passengers and Goods; and I hereby declare the following specification and the drawings therewith to be a complete description of my invention with the manner of constructing and operating the same.

My invention relates especially to that class of machinery called "elevators" for buildings, but is applicable to general hoisting and lowering apparatus for passengers or goods.

My improvements consist in suspending the cage or platform of hoisting or lowering apparatus by flexible ropes that move the load up or down, as the resistance may be, the power being applied by traction pulleys or drums that impel the ropes either way; in attaining an equipoise of the suspending-ropes at all positions of the cage or load, and in equalizing the tension and tractive power of the impelling ropes and pulleys; and it also consists in various features of construction and arrangement that will be further explained by the drawings and set forth in the claims at the end of this specification.

The objects of my invention are to adapt the winding or actuating mechanism to any range of movement with the cage or load, so the machinery can be prepared without reference to a particular place or use, the only variable element being the length of the ropes; to simplify the mechanism and reduce it as a whole to the smallest dimensions, so that in any case required the contour of the whole will not exceed the dimensions of an elevator well, way, or shaft; to maintain a counterpoise of the suspending-ropes, so that their gravity will be always in equilibrium and thus dispense with compensating weights even for the longest range or highest lifts, and to maintain on the impelling-ropes a constant strain and tractive force by means of a pivoted platform or base on which the actuating machinery is placed.

Referring to the drawings, Figure 1 is a shortened elevation or diagram showing the main elements of an elevator arranged with my improved gearing. Fig. 2 is a view of the traction or impelling pulleys with the ropes wound thereon. Fig. 3 is an opposite edge view of the impelling machinery. Fig. 4 is a rear elevation.

Similar letters of reference are employed to designate like parts in the different figures of the drawings.

The following notation is employed:

A is the main base or frame of the machinery; B′ B^2, tangent-wheels to drive the impelling-drums; C′ C^2, traction or impelling drums; D′ D^2, tangent or screw pinions operating the drums, and E driving-shaft—first mover.

F is an electric motor; G, housing and support for tangent-wheels; H, a pivot to sustain the main frame; I, hydraulic regulating apparatus; J, an elevator cage or platform, and L′ hoisting-ropes.

M is a strap-brake on the driving-shaft; N, electric solenoid to release the brake; O, lever to operate the brake; P′ P^2, main drum-shafts; K, counterweight for the cage or load, and R suspension-pulley.

Reverting first to the ropes composing the strands or series L′ L^2, if the cage J and the counterweight K are eliminated these ropes can be considered as endless, passing around the traction-drums C′ C^2 and over the suspending-pulley R, the cage J and counterweight K forming sections or connections for the ropes L′ L^2. Wound in this manner each rope passes around the two drums C′ C^2, the strands L′ leading upward from the drum C^2 at one side and the strands L^2 leading upward from the same drum at the other side. The strands of ropes at the two sides L′ L^2 are therefore balanced over the pulley R irrespective of their length or the position of the cage J. Compensating weights are not required as when the ropes are not attached to the bottom of the cage J. The number of ropes is made to correspond to their size and the amount of weight to be raised or lowered. In the drawings four ropes are shown, each independent as to strain and so wound on the drums C′ C^2 as to enter upon and leave the

590,722

~~290,722~~

drums in adjacent grooves with but little deflection laterally; consequently are nearly in the line of tension and strain. This method of winding is indicated by the numbers placed over the ends of the ropes in Fig. 2, where corresponding figures indicate the same ropes before and after they pass around the traction-drums C' C². The rope or ropes being wound in grooves partially around each of the pulleys or drums C' C² and placed under tension, as hereinafter explained, the tractive force is sufficient to impel the ropes against the resistances of a maximum load and friction of the machinery. In this method of winding the ropes it may be observed they are bent constantly in the same direction, which is a very important matter, thereby avoiding the danger of fracture caused by reverse bending over drums or pulleys.

The counterweight K is preferably made of metal heavy enough to balance the cage J and one-half of an average service-load thereon, so the tractive effect of the drums C' C² will be the same in either direction, or for raising or lowering, and the driving power be thus rendered more uniform.

Referring now to the actuating elements, the traction-drums C' C² and the tangent gear-wheels B' B² are keyed on the shafts P' P², the wheels B' B² being incased in a strong housing G G, and are driven by the right-and-left worms or screw-pinions *m m*. When the loads to be raised are not too great, the drum C' can be driven by a single worm or screw-pinion; but two are preferable in most cases, thereby avoiding end thrust on the shaft E. These pinions *m m* are fastened on the shaft E, driven right or left by an electric motor F or in any other manner by which power can be applied to the shaft. On this shaft E is placed a common strap-brake M, applied by a weight *n* on the lever O and released by an electric solenoid N or in any other manner that will coincide with stopping and starting the driving power applied to the shaft E, the object of the brake being to arrest the momentum of the rotary parts and permit the cage J to be stopped quickly and at definite points of its range—at the different floors of a building, for example.

The actuating machinery can be set on a solid foundation, but is by preference placed on a platform or base A, resting on a pivot H, the preponderance of the weight or so much as is required for tension being toward the end where the traction-drums and gearing are stationed. This causes a constant and uniform tension of the ropes L' L², consequently a constant tractive force to impel the ropes and cage.

To prevent vibration caused by stopping and starting the load and to secure a stable position of the platform or base A, a common dash-pot or hydraulic cylinder I is attached to the end, the time of movement of the piston and piston-rod *a* being regulated by a circulating-pipe and cock *e* in the usual manner.

The method of operation is apparent from the foregoing description and the drawings, the driving-shaft E being started in either direction as the cage J is to be raised or lowered.

In the drawings the impelling apparatus is shown as placed beneath the cage and in the shaft or well way, but it is obvious that when the cage J is to descend to the basement-floor *g* the impelling machinery must be set at one side or can be placed in any position in a building by leading the strands L' L² over deflecting sheaves or pulleys to such position.

In the case of driving the machinery from an engine or shafting fast and loose pulleys to receive a shifting belt are placed on the shaft E.

Having thus explained the nature and objects of my invention, what I claim as new, and desire to secure by Letters Patent, is—

1. In an elevator, a cage, counterweight, suspending-ropes, an idle or balancing pulley over which the ropes pass, and in combination therewith, impelling-ropes attached to the cage, driving-drums to drive said cage, tangent-wheels with which said pulleys are provided, and the drive-shaft with which the tangent-wheels engage.

2. In an elevator, impelling-drums, an idle-pulley, a cage, motor, impelling-ropes and tangent-wheels, and in combination therewith, a movable main frame suspended in part by the tension of the impelling-ropes, substantially as described.

3. In an elevator, a cage, motor, driving-drums, an idle-pulley, and impelling-ropes passing over said pulley, the tangent-wheels, a movable and partially-suspended base-frame, a hydraulic cylinder to regulate or control the movements of the main frame, all connected and operating substantially as described.

In testimony whereof I have hereunto affixed my signature in the presence of two witnesses.

COFRAN I. HALL,

Witnesses:

ALFRED A. ENQUIST,

WILSON D. BENT, Jr.