July 28, 1959 J. P. STERN 2,896,827

PLASTIC CONTAINERS

Filed July 22, 1955 2 Sheets-Sheet 1

Fig. 1

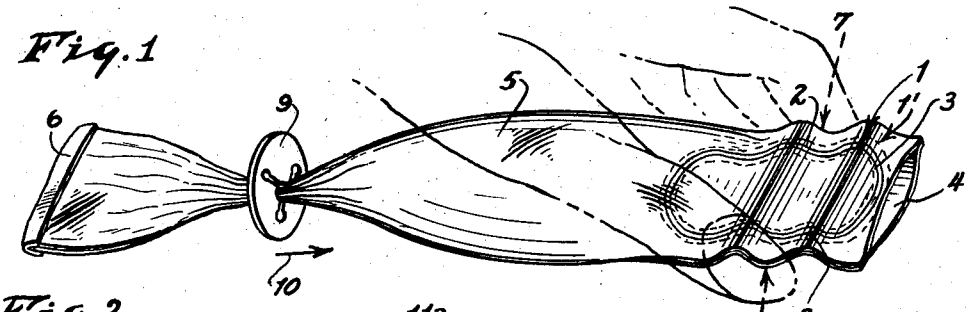

Fig. 2

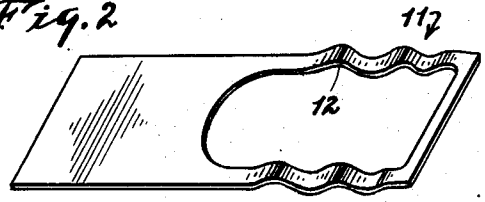

Fig. 3

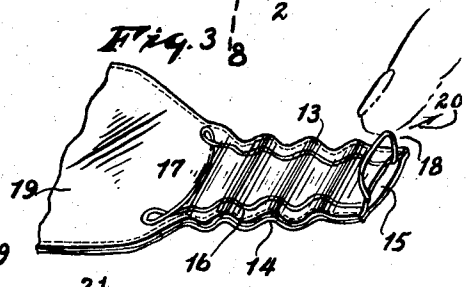

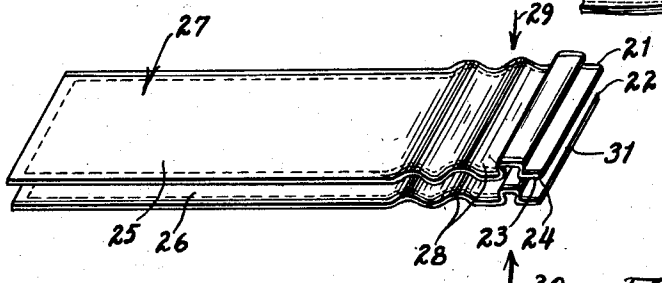

Fig. 4

Fig. 5

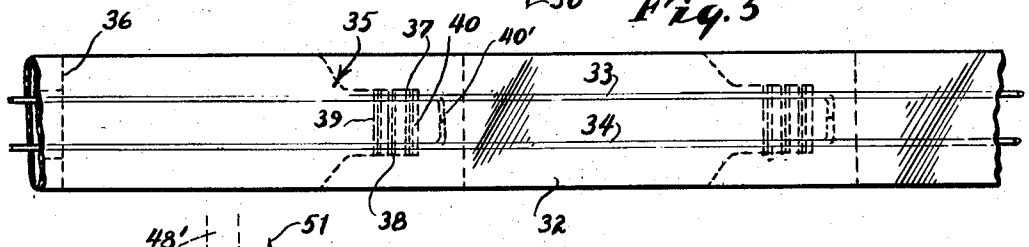

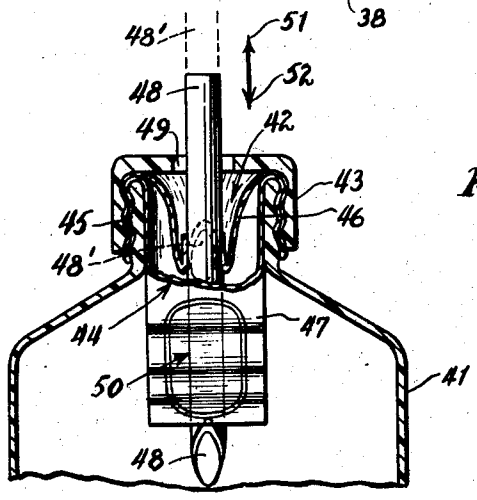

Fig. 6

INVENTOR.
JAN PETER STERN
BY Theodor Fahner
ATTORNEY

July 28, 1959 J. P. STERN 2,896,827

PLASTIC CONTAINERS

Filed July 22, 1955 2 Sheets-Sheet 2

Fig. 7

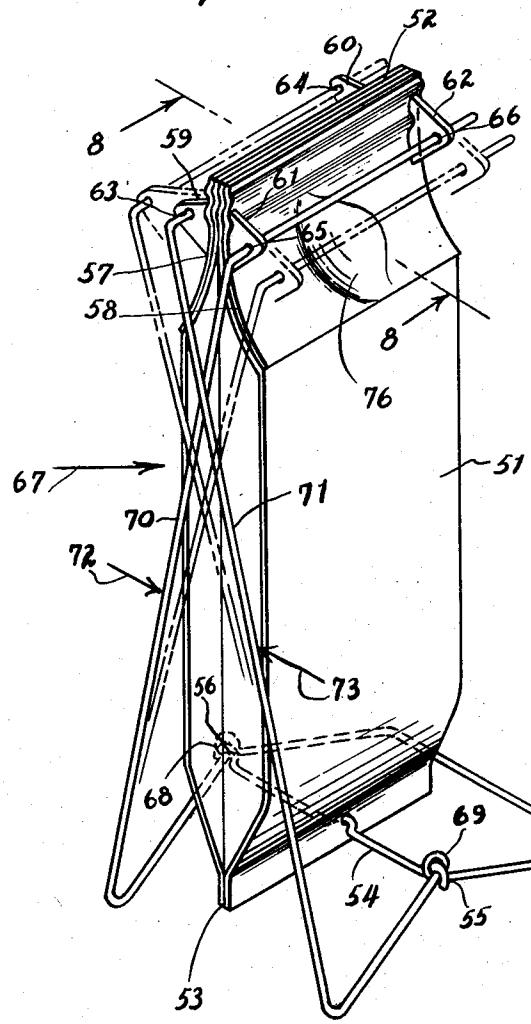

Fig. 8

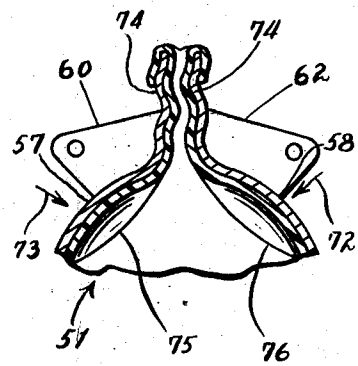

Fig. 9

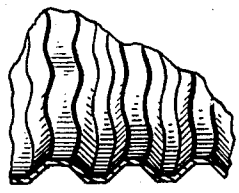

INVENTOR.
JAN PETER STERN
BY Theodore Wagner
ATTORNEY

United States Patent Office 2,896,827 Patented July 28, 1959

2,896,827

PLASTIC CONTAINERS

Jan Peter Stern, Woodside, N.Y.

Application July 22, 1955, Serial No. 523,769

16 Claims. (Cl. 222—490)

This invention relates to plastic containers and more specifically to closure devices for plastic bags or similar containers which are squeezable and have openings which may be closed and opened, to permit, respectively, storage and removal of the liquid, granular, powderized, or pasty content of the bag.

One of the objects of the invention is to provide along an opening of the bag a spring structure which is capable of assuming several positions or conditions; an expanded or uncompressed position extending the flow path into a plane or planes substantially parallel to the opening or substantially perpendicular to the axis of such opening, thereby forcing the walls of the bag at its opening to be closed; in a more or less unexpanded or compressed position of the spring structure the flow path is reduced and the opening of the bag is more or less enlarged to permit removal or squeezing out of a well determined amount of the liquid or pasty content of the bag, depending upon the flexibility of, and the pressure applied to the spring structure.

According to another object of the invention, operating pressure to effect opening is exerted in a direction parallel to the plane or planar extension of a spring wire or plate structure, i.e., parallel to one or two or more of the legs or sides of the spring structure, or, as the case may be, in a direction perpendicular to the plane or planar extension of such structure.

A further object of the invention is to provide one or more corrugations in at least some of the legs or sides of the spring structure preferably in those sides extending substantially perpendicular to the opening of the container or bag, in continuous contact with a peripheral portion of the wall of a plastic container or that wall portion adjoining such opening.

Still another object of the invention is to provide on opposite or diametrical portions of the wall of a plastic container, adjoining the opening, corrugations which in the closed position of the container, fit into each other, thereby under control of a planar spring structure fitting into this opening, to enhance the tightness of the closure; the spring structure causing opening and closing, may be straight or alternatively be also provided with similar or different corrugations increasing the flow path and enhancing closing and permitting controlled removal of contents through the opening of the bag.

Still further an object of the invention is to provide longitudinal reinforcements of a springy character in the wall of a plastic container, which extends in a direction perpendicular from, and in positions diametrical to the opening; depending upon material, shape and arrangement of these reinforcements, a planar spring structure is formed which in a relaxed position permits the walls forming the opening of the bag to be pressed together and upon compression in one or several predetermined directions, causes the walls of the opening to be relaxed.

These and other objects of the invention will be more fully understood from the drawings annexed herewith, in which—

Fig. 1 represents perspectively a substantially cylindrical plastic container embodying certain features of the invention.

Figs. 2, 3 and 4 represent modifications of the closure device shown in Fig. 1.

Fig. 4 represents a plastic container in which the closure device is incorporated in the plastic material.

Fig. 5 represents a modification of Figs. 1 and 2.

Figs. 6 and 7 represent closure devices operated by extraneous elements.

Figs. 8 and 9 demonstrate specific types of corrugations.

In Fig. 1 a longitudinal wire or band made of spring steel or bronze is formed or stamped into an approximately rectangular loop structure 1, having longitudinal side legs 2 of an undulating shape in contrast to the relatively straight perpendicular cross legs 3.

Spring loop 1 is so dimensioned that it just fits into the open end 4 of a tubular plastic container 5, consisting, for example, of polyethylene and closed in otherwise well known manner permanently at the other end 6, thereby forming a substantially cylindrical container adapted to receive a fluid or creamy substance such as tooth paste.

Compression applied between the two fingers of one hand on opposite legs 2 in the directions indicated by arrows 7, 8, will cause a relaxation of the corrugations and also, if required, a deformation of cross leg 3 in a direction out of the plane of loop 1, and thereby, depending upon the pressure exerted on side legs 2, permit the walls of container 5 to form an opening in depth indicated in Fig. 1 by line 4.

Pressure exerted at approximately the same time or slightly thereafter by the other hand of the user, against a lower portion of container 5, for example by moving squeezing disc 9 upward in the direction of arrow 10, will force the fluid or paste to pass through opening 4 and be ready for use.

Relaxation of the pressure exerted along arrows 7, 8 will cause the walls around opening 4 to engage and opening 4 to be closed.

The invention is not limited to the exact configuration of spring member 1 but may be applied in any other form or manner.

Alternatively, as shown in Fig. 1 by dotted line 1', several, for example two identical spring loops may be arranged in parallel fashion adjacent each other, both consisting of a single continuous piece of wire, or two separate wire loops arranged or attached adjacent each other so as to permit under control of lateral pressure exerted against their side legs, a deformation of the adjacent cross legs of the different loops in opposite direction, leaving an opening therebetween which will permit removal of liquid or paste under control of pressure substantially simultaneously applied against a lower portion of the bag or container.

Fig. 2 shows in perspective a plate-like spring loop structure 11 formed of spring sheet material and having several undulations in its side legs, thereby increasing flexibility in the application of pressure and removal of paste.

At the same time these undulations, especially if they extend as shown in Fig. 2 at 12 in a direction substantially perpendicular to the plane of loop 11, will impart or impress on two opposite wall portions of a polyethylene tubing in contact with undulations 12, similarly shaped undulations which will fit into each other, thereby increasing the length of flow path and thus enhancing the tightness of the closure in the closed position of the plastic tubing.

A further increase in such tightness of closure can be obtained in accordance with the invention, especially in

the case of a polyethylene tubing with relatively rigid side walls by providing at least two diametrically opposite portions of the side walls of such a tube with identically shaped undulations, schematically indicated in Fig. 3 at 13, 14.

Such undulations in the closed position of opening 15 will fit tightly together under control of a spring loop 16 which possesses undulating side legs closely following wall undulations 13, 14 or, if necessary, may be straight or differently undulating without departing from the scope of this disclosure.

In addition there is shown as modification with respect to Figs. 1 and 2, but not indispensable for the proper operation of loop 16, undulations in the lower and upper cross legs 17, 18 of loop 16. Cross leg 18 more particularly extends slightly beyond opening 15 of container or bag 19. Cross leg 18 if pressed in the direction of arrow 20 will cause the undulations to be stretched and flattened back to the retaining cross leg, thereby permitting removal of fluid or paste from tube 19 by squeezing a lower portion of bag 19, or escape by gravity if hung with closure directed downward.

Different types of compressing operations can be exerted against different spring structures to achieve parting or at least relaxation of the walls of an open ended tube or container into which such spring structures are inserted or insertable, attached to pockets of, molded in, or just in friction contact with diametrical wall portions, without exceeding the scope of the invention.

In the modification of Fig. 4 diametrical portions 21, 22 and 23, 24 of the two opposite walls or identical extruded sheets 25, 26 of a plastic tubing 27, are reinforced and these reinforcements at the open end of tubing 27 are preferably made of undulating shape, thereby forming a spring lock 28.

If necessary, instead of having lateral reinforcements, the two sheets 25, 26 forming tubing 27 may be extruded in a desired overall thickness and in the corresponding shape.

By pressure against the two legs or arms, for example, in the direction of arrows 29, 30 or in a direction substantially perpendicular to the extension of tubular sheeting 27 spring lock 28 can be opened to permit removal of fluid or liquid through opening 31 under control of a squeezing movement or operation applied in otherwise well known manner against a lower portion of tube.

In Fig. 4 the two walls or layers 25, 26 of tubular sheeting 27 are shown separated for clarity's sake; in fact the two walls are joined along their edges everywhere except along opening 31.

Fig. 5 shows an embodiment of the invention in which a tube having an enclosure in accordance with the invention is formed of a continuous sheeted tubing 32 of polyethylene plastic in which in at least one of its side walls a pair of wires 33, 34 are continuously molded in or embedded in otherwise well known manner.

For the manufacture of an individual tube, the entire tubular sheeting 32 is cut into individual pieces of equal and predetermined length and shape, one of which is shown in Fig. 5 at 35 which resembles in form that of a usual face cream or toothpaste container.

Thereafter all the open portions of tube 35, i.e., bottom portion 36 and side portions 37 and 38 are sealed or closed in otherwise well known manner with a portion of the two wires sticking out, bent around and flush molded at 40' to form the operative member of the spring action.

Thereafter the top or end portions of wires 33, 34 as schematically indicated in Fig. 5 at 39, 40 are provided with a number of undulations which are also imparted to the plastic walls and which extend in a direction substantially perpendicular to the plane of the drawing.

Pressure exerted against these undulations in a direction substantially perpendicular and/or parallel to their longitudinal extension as schematically shown will cause the walls at the open top end to part and thereby permit removal of the liquid or paste contained in tube 35 by means of a squeezing operation applied to a lower portion of tube 35.

In accordance with this invention wires 33, 34 may be arranged on or embedded in only one side wall of sheeting 32, or in both side walls, the latter arrangement serving to increase closing pressure.

In a further alternative of this embodiment of the invention, only one of the wires, for example 33, can be arranged in one side wall of tubular sheeting 32 and the other of the wires for example 34, can be arranged or embedded in an opposite side wall of tubular sheeting 32, but in a position corresponding to the relative position of wire 34 shown in Fig. 5; all this without departing from the scope of this disclosure.

While Figs. 1 to 5 illustrate a spring device for opening up or shortening of flow paths in tubular sheetings, in the form of undulating corrugated wire or plate structures, under control of lateral or other pressure movements exerted directly thereupon or upon one of the portions of the undulating structure, Figs. 6 and 7 illustrate means for operating such wire structures by additional members supported on the tubular sheeting or supporting such tubular sheeting.

For example, Fig. 6 illustrates the case where a plastic bottle 41 of otherwise well known construction is provided with a closure unit or structure 42 consisting of a cap member 43 and of a plastic sheeted sleeve 44, which has a reinversed portion 45 tightly inserted and held between cap member 43 and bottle 41, and which also extends into tubular top and bottom portions, 46, 47, respectively.

Top portion 46 is closed, tightly surrounding and preferably attached to a plastic inlet tube 48. Inlet tube 48 extends with its upper part through opening 49 of cap member 43 while the lower portion 47 of tubular sheeting 44, in accordance with the invention, forms spring lock 50 such as illustrated in Figs. 1 to 5, which permits opening under control of inlet tube 48, in the following manner.

By moving inlet tube 48 up and down in the directions of arrows 51, 52 undulating spring lock 50 can be selectively opened or closed, thereby permitting removal or storage of the contents of bottle 41.

In Fig. 6 tube 48 is shown in the opening position of spring lock 50, extending into the interior of bottle 41 and thereby permitting of squeezing out of a desired amount of liquid or paste contained in bottle 41.

In order to close spring lock 50, it is only necessary to pull inlet tube 48 upwards into the position shown in Fig. 6 in dotted lines at 48'.

In this position, spring lock 50 will be automatically closed under control of its undulating or corrugated wire or plate structure, and no liquid or paste can escape from bottle 41, at least not without an additional insertion movement of inlet tube 48.

Instead of providing a separate closure device consisting of cap member 43 and tubing 44, tubing 44 may be made or formed of one piece with bottle or bag 41, then consisting simply of a reinversed portion of the neck of bottle 41. In this case closure tightness is enhanced, if not assured, by the pressure exerted by the liquid or paste against the reinversed tubing portion corresponding to tube portion 47 in Fig. 6 and extending into the interior of bottle 41.

In Fig. 7 other extraneous means are used to open an opening in a plastic bag or container having an undulated or corrugated wire or plate lock insuring selective closing and opening operations.

Such bags are particularly suitable for the containment or storage of liquids such as milk.

In the particular embodiment shown in Fig. 7, a bag 51 of substantially quadrangular shape is provided with a top or slot or opening 52 and is closed at its lower end

at 53 in otherwise well known manner, but with a wire 54 extending into hooks at both ends thereof as schematically indicated at 55, 56 respectively.

The purpose of hooks 55, 56 will be explained further below.

Top opening has attached thereto or embedded thereat, a planar lock consisting of a pair of curved plates schematically indicated at 57, 58 and provided with lateral apertured projections 59, 60 and 61, 62 respectively.

Projections 59 to 62 serve to support lock 57, 58 and the plastic container 51 to which it is attached on pivot points 63, 64 and 65, 66 respectively, of a spring wire structure schematically indicated at 67, the base portion of which at points 68, 69 forms openings to receive the hooks 55, 56 of wire 54 extending through the closed end portion 53 of container or bag 51.

In this way bag 51 can be securely supported for transport and storage. A squeezing movement exerted upon the longitudinal legs 70, 71 of wire structure 67, will cause pivot points 63 to 65 engaging projections 59 to 62 to cause locking plates 57, 58 to turn in opposite direction as schematically indicated by arrows 72, 73, thereby opening the side walls of bag 51 to which closure plates 57, 58 are attached and permitting removal of the liquid contained in bag 51.

Closure plates 57, 58 may be of any desired form or shape, preferably undulating or corrugated (thus engaging like gears) to increase the flow path and enhance tightness of closure.

Preferred corrugations for plates 57, 58 have the form indicated in cross section in Fig. 8, on an enlarged scale, where beneath upper corrugations 74 closely following each other, there are arranged lower corrugations 75, 76 running in a direction substantially perpendicular to corrugations 74 and bulging in opposite directions to permit passage of the contents, once plates 57, 58 have been turned in the directions of arrows 72, 73 around hinges 60, 62 as described above in connection with Fig. 7.

Fig. 8 shows a fragmentary section of a particularly effective corrugation for planar spring locks in accordance with any or all of the embodiments of Figs. 1 through 7.

The corrugations shown in Fig. 9 do not only extend in a direction perpendicular to the plane of the drawing but also in several directions parallel to the plane of the drawing, thereby causing a three dimensional type of undulation which enhances effectiveness of closure tightening, and may be produced by embossing flat plastic sheets by means of suitable dies with or without the application of heat as required.

The invention is not limited to form, material, type and shape of closure means, container, and tubular sheeting shown and described, but may be applied in any form and manner whatsoever without departing from the scope of this disclosure.

I claim:

1. In a container structure at least two sheet portions facing each other, each having corrugations adapted to fit into each other forming a tight closure if superimposed upon each other, and a planar spring structure arranged between said sheet portions and extending along a peripheral portion thereof and attached to said sheet portions along said peripheral portions, said planar spring structure being squeezable along opposite portions thereof to permit said two sheet portions to separate under control of said squeeze.

2. Structure according to claim 1 comprising corrugations in said spring structure supporting said sheet portions to force said sheet portions to assume a desired form of corrugation.

3. Structure according to claim 1 wherein the material of said sheet portions is corrugated.

4. Structure according to claim 1 comprising corrugations in the spring structure supporting said sheet portions and wherein the material of said sheet portions are also corrugated in a manner corresponding to that of said spring structure.

5. In a container structure a closure therefor comprising a tubular member of flexible sheet material one end of which forms the external opening of said container structure, the portion of said tubular member adjacent the external opening thereof being flattened and collapsed so that opposite sides of said flattened portion are normally in contact with each other, said collapsed and flattened portion of the tubular member being provided with a spring-like structure forming interlocking corrugations in said opposite sides of said flattened portion when said spring-like structure is in its normal position of minimum elastic deformation, said interlocked corrugations forming a secure closure for said container when said spring-like structure is in said normal position, elastic deformation of said spring-like structure diminishing and disengaging the interlocked corrugations of said flattened portion whereby the contents of the container can escape therefrom through the external opening of the tubular member.

6. In a container structure a closure therefor comprising a tubular member of flexible sheet material one end of which forms the external opening of said container structure, the portion of said tubular member adjacent the external opening thereof being flattened and collapsed so that opposite sides of said flattened portion are normally in contact with each other, said collapsed and flattened portion of the tubular member being provided with a spring structure formed with parallel corrugations disposed substantially in the plane of the flattened portion of the tubular member and perpendicular to the longitudinal axis thereof, said corrugated spring structure forming interlocking corrugations in said opposite sides of said flattened portion when said spring structure is in its normal position of minimum elastic deformation, said interlocked corrugations forming a secure closure for said container when said spring structure is in said normal position, elastic deformation of said spring structure diminishing and disengaging the interlocked corrugations of said flattened portion whereby the contents of the container can escape therefrom through the external opening of the tubular member.

7. A container structure according to claim 6 in which the corrugated spring structure is a wire loop disposed between the normally contacting opposite sides of the flattened portion of said tubular member, elastic deformation of said wire loop by movement of opposite longitudinal sides of said loop toward each other diminishing and disengaging the interlocking corrugations formed in said flattened portion of said tubular member.

8. A container structure according to claim 6 in which the corrugated spring structure is formed of springy sheet material, elastic deformation of said springy sheet material by movement of opposite longitudinal edges thereof toward each other diminishing and disengaging the interlocking corrugations formed in the flattened portion of said tubular member.

9. A container structure according to claim 6 in which the corrugated spring structure is formed with a tab-like extension that extends beyond the external opening of the tubular member, elastic deformation of said corrugated spring structure by longitudinal movement of said tab-like extension away from the container structure diminishing and disengaging the interlocked corrugations formed in the flattened portion of said tubular member.

10. A container structure according to claim 6 in which the spring structure is integrally formed in the flattened portion of said tubular member.

11. A container structure according to claim 6 in which the spring structure is disposed externally about the flattened portion of the tubular member.

12. A container structure according to claim 6 in which the spring structure is formed from springy sheet ma-

terial and is disposed externally about the flattened portion of the tubular member.

13. In a container structure a closure therefor comprising a flat tubular member formed from two layers of flexible sheet material secured to each other along opposite longitudinal edges thereof, one end of said tubular member comprising the external opening of said container structure, the portion of said flat tubular member adjacent the external opening being provided with a spring structure forming interlocking corrugations in said portion when said spring structure is in its normal position of minimum elastic deformation, said interlocked corrugations forming a secure closure for said container when said spring structure is in said normal position, elastic deformation of said spring structure diminishing and disengaging the interlocked corrugations of said portion of the tubular member whereby the contents of the container can escape therefrom through the external opening of the tubular member.

14. In a container structure a closure therefor comprising a tubular member of flexible sheet material one end of which forms the external opening of said container structure, the portion of said tubular member adjacent the external opening thereof being flattened and collapsed so that opposite sides of said flattened portion are normally in contact with each other, said collapsed and flattened portion of the tubular member being provided with a spring structure forming interlocking corrugations in said opposite sides of said flattened portion when said spring structure is in its normal position of minimum elastic deformation, said interlocked corrugations forming a secure closure for said container when said spring structure is in said normal position, elastic deformation of said spring structure diminishing and disengaging the interlocked corrugations of said flattened portion whereby the contents of the container can escape therefrom through the external opening of the tubular member, said tubular member extending inwardly into the interior of said container structure with the flattened corrugated portion and the associated external opening of said tubular member disposed entirely within said container structure.

15. In a container structure a closure therefor comprising a tubular member of flexible sheet material one end of which forms the external opening of said container structure, the portion of said tubular member adjacent the external opening being flattened and collapsed so that opposite sides of said flattened portion are normally in contact with each other, said flattened portion of the tubular member being provided with a spring structure forming interlocking corrugations in said opposite sides of said flattened portion when said spring structure is in its normal position of minimum elastic deformation, said interlocked corrugations forming a secure closure for said container when said spring structure is in said normal position, said container being provided with means insertable between the normally contacting opposite sides of said flattened portion whereby the interlocked corrugations of said portion of the tubular member are disengaged so that the contents of the container can escape therefrom through the external opening of the tubular member.

16. In a container structure a closure therefor comprising a tubular member of flexible sheet material one end of which forms the external opening of said container structure, the portion of said tubular member adjacent the external opening being flattened and collapsed so that opposite sides of said flattened portion are normally in contact with each other, said flattened portion of the tubular member being provided with a spring structure forming interlocking corrugations in said opposite sides of said flattened portion when said spring structure is in its normal position of minimum elastic deformation, said interlocked corrugations forming a secure closure for said container when said spring structure is in said normal position, said container being provided with a tube insertable between the normally contacting opposite sides of said flattened portion whereby the interlocked corrugations of said portion of the tubular member are disengaged so that the contents of the container can escape therefrom through the external opening of the tubular member.

References Cited in the file of this patent

UNITED STATES PATENTS

1,478,355	Peterson	Dec. 18, 1923
1,623,107	Goodykoontz	Apr. 5, 1927
2,103,389	Salfisberg	Dec. 28, 1937
2,198,773	Hollenbeck	Apr. 30, 1940
2,411,244	Bogoslowsky	Nov. 19, 1946
2,517,027	Rado	Aug. 1, 1950
2,611,515	Smith	Sept. 23, 1952
2,730,274	Brown	Jan. 10, 1956