Dec. 31, 1929. F. HEIDBREDER 1,741,517

AIRPLANE PROPELLING MECHANISM

Filed Nov. 16, 1927 2 Sheets-Sheet 1

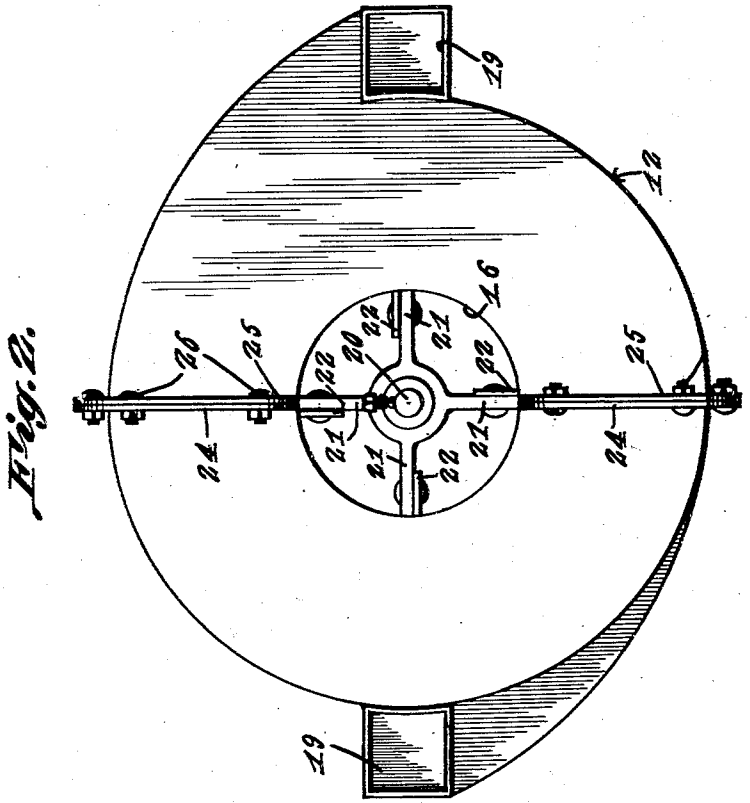

Fig. 2.

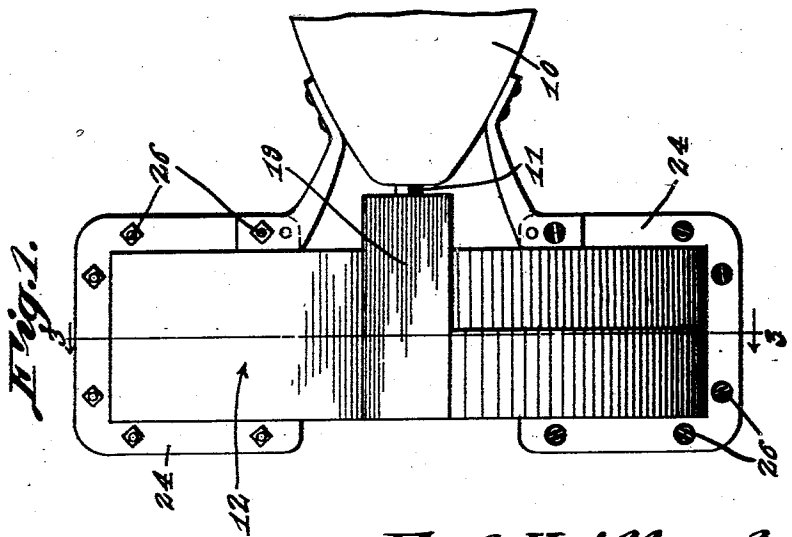

Fig. 1.

Fred Heidbreder, INVENTOR

BY Victor J. Evans

ATTORNEY

Dec. 31, 1929. F. HEIDBREDER 1,741,517

AIRPLANE PROPELLING MECHANISM

Filed Nov. 16, 1927 2 Sheets-Sheet 2

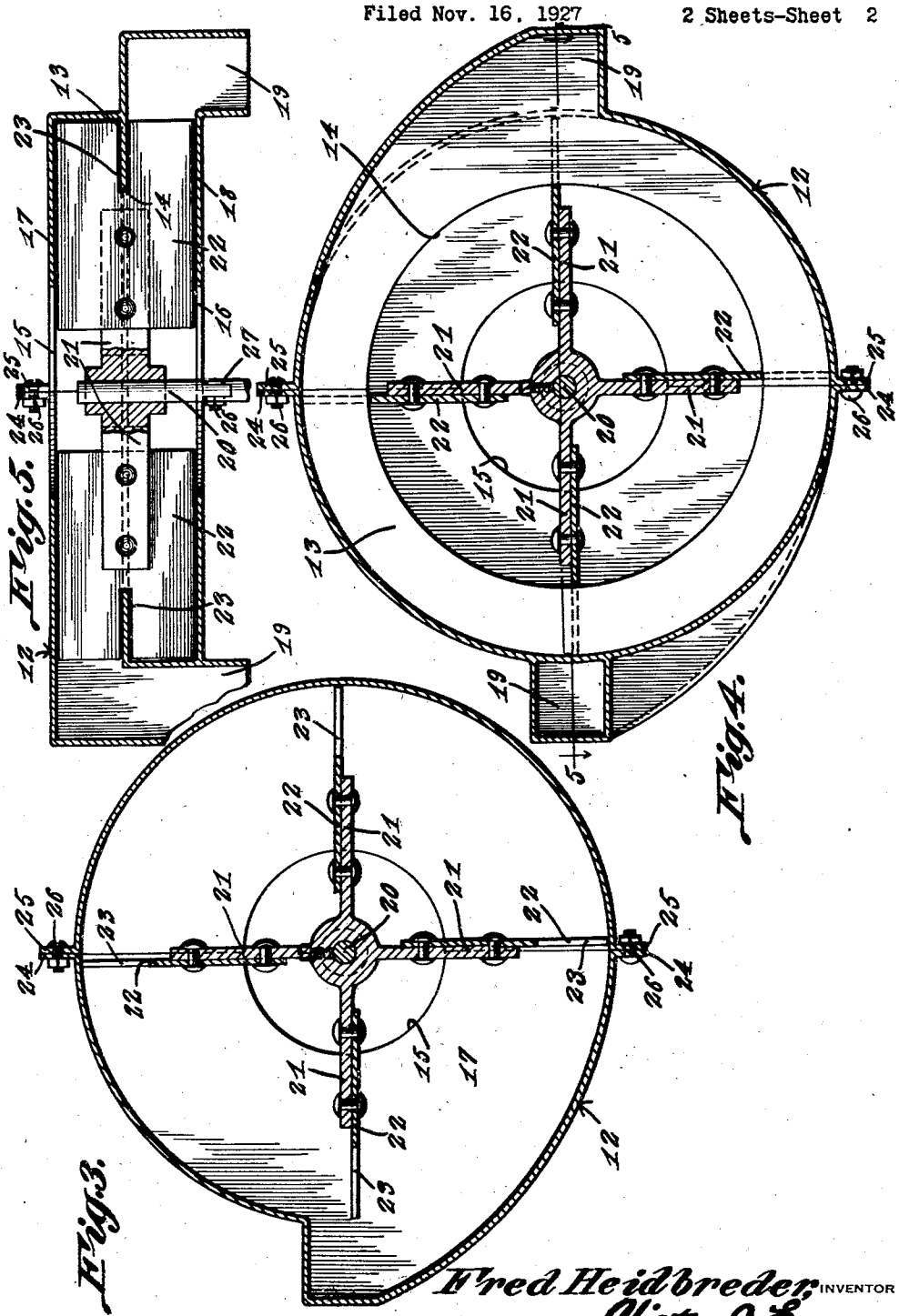

Fig. 3.

Fig. 4.

Fig. 5.

Fred Heidbreder, INVENTOR

BY Victor J. Evans

ATTORNEY

WITNESS:

Patented Dec. 31, 1929 1,741,517

UNITED STATES PATENT OFFICE

FRED HEIDBREDER, OF QUINCY, ILLINOIS

AIRPLANE-PROPELLING MECHANISM

Application filed November 16, 1927. Serial No. 233,686.

The present invention relates to airplane propelling mechanism and has for its object the improvement of mechanism of this character. More specifically, it is an object of the invention to provide a propeller that can be placed near the center of gravity of the machine on which it is mounted and also at the center of resistance to the medium through which the propeller is traveling.

A further object is to provide a propeller so constructed that when in operation the slip stream will be directed to the side of the machine and will not inconvenience the operator of said machine.

A further object is to provide a propeller so arranged that air may be taken in at the front of the machine and forced out through nozzles at the rear of the machine.

A further object is to provide a propeller which may be adapted to the propulsion of all manner of vehicles, either water or land vehicles.

Further objects are simplicity of construction and operation, adaptability to the propulsion of various vehicles, cheapness of manufacture and cheapness of installation.

Other objects and advantages will appear from the following description and will be set forth in the subjoined claim, and I do not wish to be limited in the scope of my invention except as I shall be limited by said claim.

In the drawings:

Figure 1 is a side elevation, showing the invention attached to the drive shaft of an airplane, the forward end of the airplane being shown fragmentarily.

Figure 2 is a rear elevation of the invention per se, showing the drive shaft of the airplane in section.

Figure 3 is a section on the line 3—3 of Figure 1, showing the internal construction of the device, looking in the direction of the arrows.

Figure 4 is a section on the same line looking in the opposite direction.

Figure 5 is a section at right angles to the section shown in Figures 3 and 4, on the line 5—5 of Figure 4.

Referring to the drawings in detail, 10 designates an airplane, 11 is a drive shaft thereof, and 12 is the propeller casing which constitutes a part of the present invention. The casing is preferably cylindrical in shape and is divided into two compartments by a partition 13 extending from the peripheral walls and lying in a radial plane. This partition is provided with a central opening 14 in alignment with central openings 15 and 16 in the front and rear walls 17 and 18 of the casing. The openings 14, 15 and 16 are preferably circular in shape and the opening 14 is of considerably greater diameter than that of the openings 15 and 16. The partition 13 divides the interior of the casing into two substantially equal compartments each of which is provided with an outlet 19 which are arranged on diametrically opposite sides of the casing and are directed in a rearwardly direction.

Mounted within the casing and concentrically arranged relative thereto is a propeller shaft 20 having spokes 21 extending radially therefrom, upon which are mounted the propeller blades 22, the propeller blades being provided with notches 23 adapted to receive therein the partition 13, whereby the propeller blades may extend to substantially the full diametrical width of the casing and operate to draw in air from both sides of the casing and force it through the nozzles 19 rearwardly along the sides of the machine. The nozzles may be extended to reach the rear of the machine if so desired. For purposes of brevity and illustration such extensions are not shown, as the construction thereof would be obvious to anyone skilled in the art.

The blades 22 may be attached to the spokes 21 in any suitable manner, as by being riveted thereto, and the casing 12 may be made in two sections having apertured flanges 24 and 25 thereon, whereby they may be detachably connected together by bolts 26 to facilitate assembling and disassembling the device.

In operation, the propeller shaft 20 may be attached as by a tongue and kerf connection, as shown at 27 in Figure 5, to the drive shaft 11 of an airplane, or of any other

vehicle as may be desired. The engine of the vehicle being set in motion, the shaft 11 transmits rotary movement of the fan within the casing, the propeller casing 12 being held stationary by brackets 28 securing the same to the frame of the vehicle. Upon the rotation of the shaft the propeller blades will be rotated, drawing in air or other fluid, depending on the medium in which the vehicle is moving, through the apertures 15 and 16 and discharging it with great force through the nozzles 19, thereby propelling the machine in a forward direction.

Having described my invention, what I claim is:

A propeller adapted to be attached to a vehicle and having a propeller shaft adapted to be connected with the drive shaft of the vehicle, said propeller shaft having radially extending propeller blades, a casing surrounding said propeller blades and having a radially extending partition having a central opening therein, said propeller blades having peripheral notches therein to receive said partition, said casing having front and rear openings in alignment with the opening in the partition, and nozzles connected peripherally with said casing and communicating therewith respectively on opposite sides of the partition, said nozzles being both directed rearwardly at diametrically opposite points of said casing.

In testimony whereof I affix my signature.

FRED HEIDBREDER.