March 15, 1927. 1,621,109

H. E. M. DRUMMOND

GREASE AND OIL PUMP FOR MOTOR CARS AND MACHINERY

Filed Oct. 2, 1925

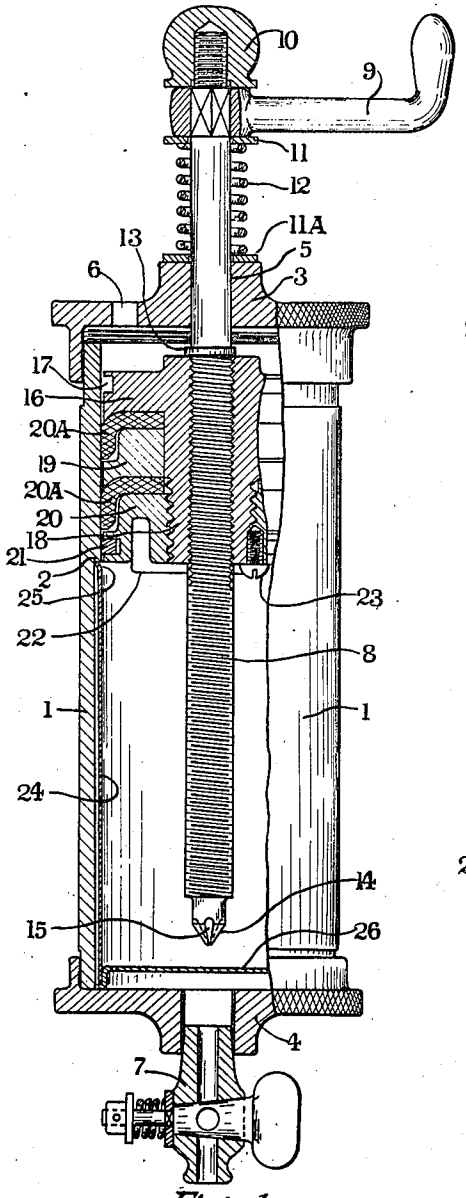

Fig. 1.

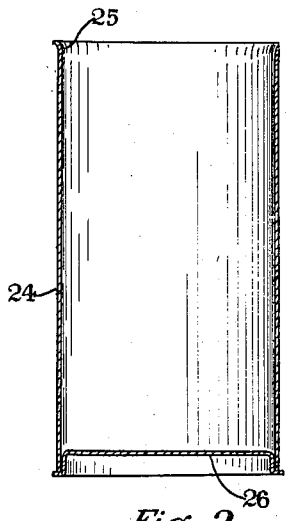

Fig. 2.



Fig. 3.

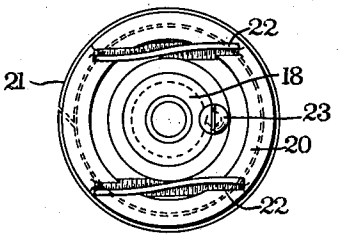

Fig. 4.

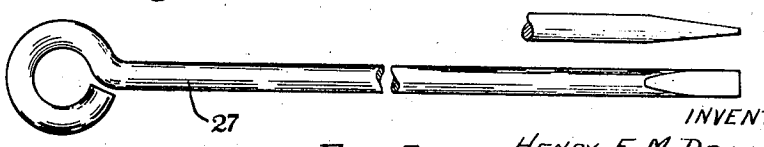

Fig. 5.

INVENTOR
HENRY E. M. DRUMMOND
BY Richards & Geier
ATTORNEYS

Patented Mar. 15, 1927. 1,621,109

UNITED STATES PATENT OFFICE.

HENRY EDWARD MANSFIELD DRUMMOND, OF FRANKTON JUNCTION, NEW ZEALAND.

GREASE AND OIL PUMP FOR MOTOR CARS AND MACHINERY.

Application filed October 2, 1925. Serial No. 60,011.

This invention relates to improvements in lubricant dispensing devices and particularly to a manually operated device used for lubricating bearing surfaces upon automobiles and other machinery.

The object of the invention is to provide an improved pump or lubricant dispensing device which will positively eject during manual operation thereof a quantity of grease or oil under very high pressure; the same being substantially independent of the consistency of the lubricant, and the direction in which the apparatus is pointed.

A further object is to provide in combination with the said pump, an improved form of lubricant container capable of insertion within said pump, and functioning upon the operation thereof.

A still further object is to provide a device of the character described which will be simple in construction, effective in operation, and inexpensive to manufacture.

The invention broadly comprises a cylinder member constructed of any desired metal and of any approved size. The cylinder is truly bored being slightly smaller at its top end, and is provided with suitable covers for each end of the cylinder; the bottom cover being tapped and fitted with an approved cock to which may be attached a suitable flexible connection. The top cover has a centrally disposed hole therein to house a screwed rod. Mounted on an end of the screwed rod which projects from the top cover is a handle, a push button, and disposed between the handle member and the outer projecting face of the top cover is a coiled spring surrounding said rod and retaining same normally under tension. There is a peculiarly designed piston member provided, which is mounted on the screwed portion of the rod, and accordingly moves on the turning of said rod; when in position the said piston is adapted to be a sliding fit within the cylinder,

The lower end of the screwed rod is preferably reduced and provided with flutes and a piercing point. In combination with the aforesaid parts comprising the grease or oil pump, there is a container or cartridge which is adapted to be filled with grease or oil and be inserted within the pump cylinder. One end of the cartridge is left open and is bell mouthed, the lower end of the cartridge is furnished with a concentric dished bottom piece.

A rod is also provided which is adapted to be inserted through a hole in the top cover of the metal cylinder; and such rod is for the dual purpose of ascertaining the position of the cartridge within the pump, and the amount of grease or oil in said cartridge.

Other details of construction are embodied in the invention as will hereinafter be described, as will also the operation thereof.

Referring to the drawings accompanying this specification:—

Figure 1 is a part sectional elevation of the invention.

Figure 2 is a sectional view of the cartridge member.

Figure 3 is a plan view of the point of the screwed rod.

Figure 4 is a plan view of the assembled piston.

Figure 5 is a view of the gauging rod.

The invention primarily comprises a cylinder 1 made of any desired metal and size according to requirements. The said cylinder is bored concentric, and has its upper end slightly constricted to form an annular lip or shoulder 2.

There are screwed cover members 3 and 4 provided for the top and bottom ends of the said cylinder 1; these covers are attached to the said cylinder 1 by a screw thread as is indicated in the drawing; or the lower cover 4 may be attached by means of a hinge, and fastened tight to the lower face of the said cylinder by means of wing nuts (this construction is not shown in the drawings).

The top cover 3 has a centrally disposed hole 5 therein, and also a gauge hole 6; the bottom cover 4 is tapped and fitted with an approved type of cock 7, to which may be attached a flexible conducting tube (not shown in the drawing).

There is a screwed rod 8, which is centrally disposed within the said cylinder 1, and is retained in position therein by being housed within the hole 5 in the boss like portion of the top cover member 3 in a manner that will permit of a sliding fit of said rod 8 through the aforesaid parts and within the cylinder 1. Mounted on the screwed rod 8 is a handle 9 which is for the purpose of rotating said rod.

On the top end of said rod 8 there is a push button 10, and disposed between the undersurface of the said handle 9 and the outer surface of the boss like portion of said top cover member 3, are two washers 11

and 11A which serve to retain in position a spiral spring 12, which surrounds said rod 8 and keeps same normally under tension. There is a solid collar 13 fitted to the rod in the position illustrated; this collar acts against the pull of the spring 12 and permits the said rod 8 having a range of travel within the cylinder 1 as may be desired; the opposite end of said rod is tapered as at 14, and provided with cutting flukes 15. It will be understood that the screw on the rod is preferably a left hand thread, and may be of any desired pitch, according to the movement speed desired to be imparted to the piston member.

Mounted on the said screwed rod 8, and adapted to move on the rotation thereof is a piston member 16, which is provided with a groove 17 and a long partially screwed boss portion 18 upon which is fitted a junk ring 19 and a second junk ring 20; and between these junk rings are fitted washers 20A of cupped leather or any other suitable material, and in the junk ring 20 there is a groove in which is inserted a metal ring 21; the junk ring 20 is provided with two helical vanes 22 (see Figure 4 of the drawings) the purpose of which will be hereinafter described.

The junk ring 20 is prevented from screwing off the piston member 16 by means of a stop screw 23 or some such suitable means.

As before mentioned there is a groove 17 in the piston member 16, and such groove is for the purpose of trapping any grease that may pass the leather washers 20A, and to further reduce any likelihood of the passage of grease past the piston the metal spring ring 21 is fitted in a sufficiently flexible manner to ensure close engagement with the inside walls of the grease or oil cartridge member or container.

There is a casing member or cartridge provided to hold the grease or oil for ejection from the pump. The said cartridge member 24 is made from any desired metal and is of a size as will be a sliding fit within the said cylinder 1; the top end of said cartridge being slightly bell mouthed as at 25 to fit close under the recess of the lip 2 of the cylinder 1 when in its normal position, and this construction permits a free passage of the piston 16 into the said cartridge 24. The lower end of the cartridge member is closed by means of a concentric dished bottom piece 26 (see Figure 2 of the drawings).

This construction will allow of pressure being placed upon said container.

It is preferred that the cartridge should have no ridge or seam on its outside surface to permit of its free entry within the cylinder 1. Accordingly said cartridge would be constructed in the known manner of manufacturing seamless containers.

There is a gauge rod 27 provided (see Figure 5), this rod is for the purpose of ascertaining the dual position of the piston 16 within the cylinder 1, and the amount of grease or oil remaining in the cartridge 24.

The operation of using my grease or oil pump is first to turn the handle attached to the rod so as to bring the piston member into the position as shown in Figure 1 of the drawings. Then remove the lower cover 4 and insert cartridge member 24 within the cylinder 1, the said cartridge having been previously filled sufficiently with the desired grade of oil or grease. Now replace cover 4, at the same time seeing that the cock 7 is closed, pierce the bottom of the concentric disc portion 26 by pressing the push button 10 which causes the screw rod 8, with the piston 16 mounted thereon, to slide downwardly through the upper cover 3 until the cutting flukes 15 on said rod 8 will penetrate the bottom of the cartridge container thus allowing the grease or oil to flow into the lower end of the cylinder when pressure is applied by means of the piston and the outlet of the grease from the cylinder is controlled by the cock 7. It will be understood that there is sufficient displacement between said piston 16 and the level of the grease in the cartridge to permit of the fluked point 15 penetrating the bottom 26; also the length of the rod 8 being such as to permit the aforesaid penetration with the above displacement.

Having penetrated the bottom of the cartridge by this means, further pressure may be applied to the grease or oil by turning the handle 9, causing the rod 8 to revolve and the piston 16 to again travel downwardly into the interior of the cartridge and engage with the lubricant and apply pressure thereto.

During this operation, the friction of the leather washers 20A and the helical vanes 22 on the junk ring 20, will become engaged with the grease in the container and keep said piston 16 from revolving.

It will be understood from this description that by the action of my invention, a very high pressure can be exerted to expel the grease or oil from the pump and consequent upon such pressure, the lubricant can be directed in any direction desired.

When the user of the pump is desirous of ascertaining how much grease is contained therein he pushes the gauge rod 27 downwardly through the opening 6 in the top cover 3 and the rod is thereupon permitted to enter the cylinder, and on being withdrawn, the amount of grease remaining in the container can be ascertained.

It is believed by the use of the metal containers for the lubricant that a long felt want is being supplied to the public, as different grades of oil or grease may be put

up by manufacturers in said containers, and the user of my pump can choose what grade of lubricant he desires.

I claim by the use of my invention a reduction in operating parts, perfect action thereof and a great advantage when using the pump, as it is perfectly clean in operation and will deliver the lubricant as required and where desired.

From the foregoing description it will be apparent that there is thus provided a device of the character described possessing the particular features of advantage before enumerated as desirable, but which obviously is susceptible of modification in its form, proportion, detail construction or arrangement of parts, without departing from the principle involved or sacrificing any of its advantages.

What I claim as new and desire to secure by Letters Patent is:—

1. A grease and oil pump, including a cylinder capable of receiving in one end thereof a cartridge having a closed end, a piston in said cylinder for entering said cartridge to force the contents therefrom, means for operating said piston, and means carried by the last named means for penetrating the closed end of said cartridge to form an outlet opening therein.

2. A grease and oil pump including a cylinder capable of receiving in one end thereof a cartridge having a closed end, a piston in said cylinder for entering said cartridge to force the contents therefrom, and a screw member having threaded engagement with said piston and provided with a point at one end, said screw member having an initial movement longitudinally of said cylinder to penetrate the closed end of said cartridge to form an outlet opening therein, and having a subsequent rotary movement to operate said piston.

3. A grease and oil pump, including a cylinder capable of receiving in one end thereof a cartridge having a closed end, a piston in said cylinder for entering said cartridge to force the contents therefrom, and a screw member for operating said piston and having means at one end thereof for penetrating the closed end of said cartridge to form an outlet opening therein.

4. A grease and oil pump, including a cylinder capable of receiving in one end thereof a cartridge having a closed end, a piston in said cylinder for entering said cartridge to force the contents therefrom, and a screw member for operating said piston, said screw member having a fluked point at one end and being movable longitudinally of said cylinder to cause said point to penetrate the closed end of said cartridge to form an outlet opening therein.

5. A grease and oil pump, including a cylinder capable of receiving in one end thereof a cartridge having a closed end, a piston in said cylinder for entering said cartridge to force the contents therefrom, a screw member for operating said piston and having means at one end thereof for penetrating the closed end of said cartridge to form an outlet opening therein, and means for normally retaining said screw member in retracted position relative to the closed end of said cartridge.

6. A grease and oil pump, including a cylinder capable of receiving in one end thereof a cartridge having a closed end, a closure for one end of said cylinder having an opening therein, a piston in said cylinder for entering said cartridge to force the contents therefrom, means for operating said piston, and means carried by the last named means for penetrating the closed end of said cartridge to form an outlet opening therein in alignment with the opening in said closure.

7. A grease and oil pump, including a cylinder the inner wall of which is reduced adjacent one end of the cylinder to form an annular shoulder against which the open end of a cartridge is adapted to abut with the interior of said cartridge extending coincidentally, with the inner wall of the reduced end of the cylinder, a piston in said cylinder for entering said cartridge to force the contents therefrom, and a screw member for operating said piston and having means at one end thereof for penetrating the closed end of said cartridge to form an outlet opening therein.

In testimony whereof I have affixed my signature.

HENRY EDWARD MANSFIELD DRUMMOND.