United States Patent

[11] 3,619,395

[72] Inventor **Milorad Skendzic**
New York, N.Y.

[21] Appl. No. **817,080**
[22] Filed **Apr. 17, 1969**
[45] Patented **Nov. 9, 1971**

[73] Assignee **Minigrip Inc.**
Orangeburg, N.Y.

[54] **METHOD OF MAKING A PILFER PROOF PACKAGE**
10 Claims, 5 Drawing Figs.

[52] **U.S. Cl.** **264/171,** 150/3, 229/66, 264/173
[51] **Int. Cl.** **B65d 17/20,** B65d 33/00
[50] **Field of Search** ..... 150/3; 229/51 AS, 62, 66; 161/48; 264/95, 171, 173

[56] **References Cited**

UNITED STATES PATENTS

2,554,160	5/1951	Von Gunten	229/51 AS UX
3,198,228	8/1965	Naito	150/3
3,326,399	6/1967	Ausnit	150/3
3,368,740	2/1968	Rohde	229/66
3,426,959	2/1969	Lemelson	229/62
3,473,589	10/1969	Gotz	150/3

Primary Examiner—Donald F. Norton
Attorney—Hill, Sherman, Meroni, Gross & Simpson

ABSTRACT: A plastic fully enclosed container having a colored plastic ribbon or bead formed integrally thereon and extending adjacent one end thereof. The ribbon is removable to open the container by pulling it at one end across the width of the container. Until the ribbon is removed, however, the container is completely sealed and airtight. Removal of the ribbon not only provides a visual indication that the container has been opened but also provides a narrow slit or gap across one wall to provide access to the container. The edges of the slit or gap are jagged and irregular, thus facilitating location of the slit not only visually but by finger touch of the user.

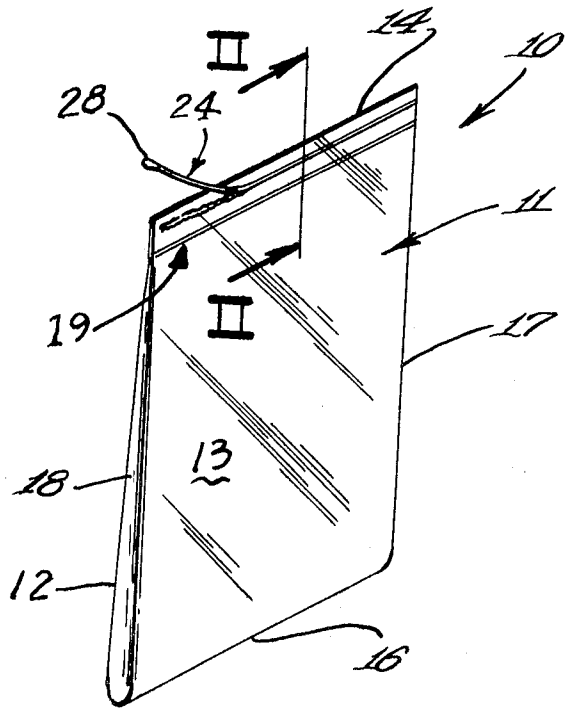

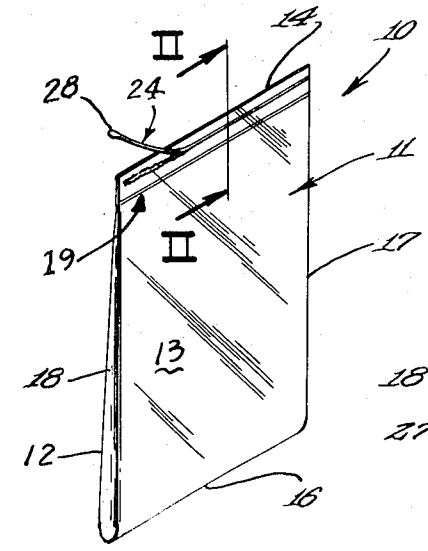

Fig.1

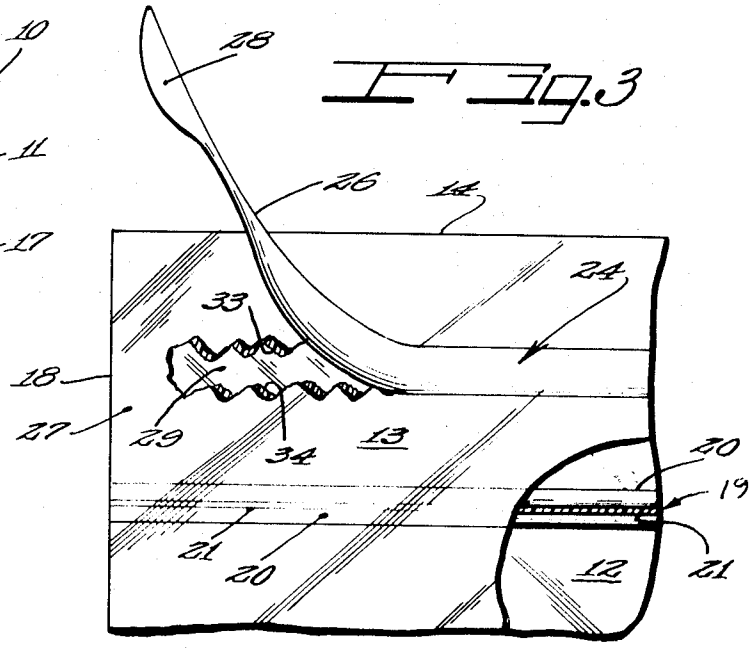

Fig.3

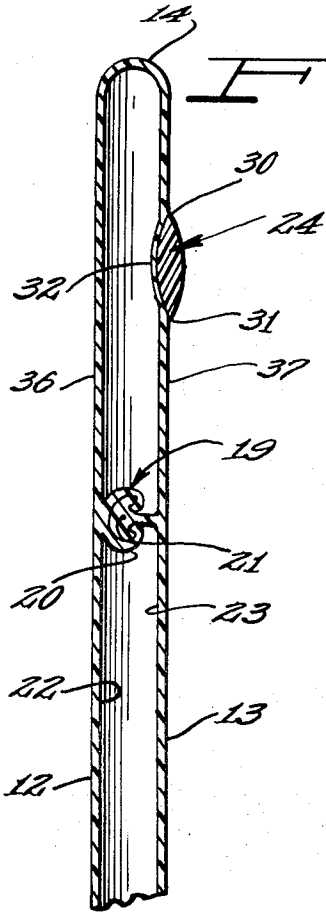

Fig.2

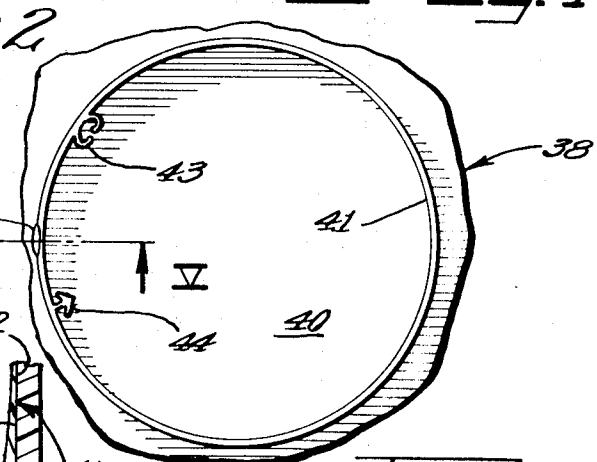

Fig.4

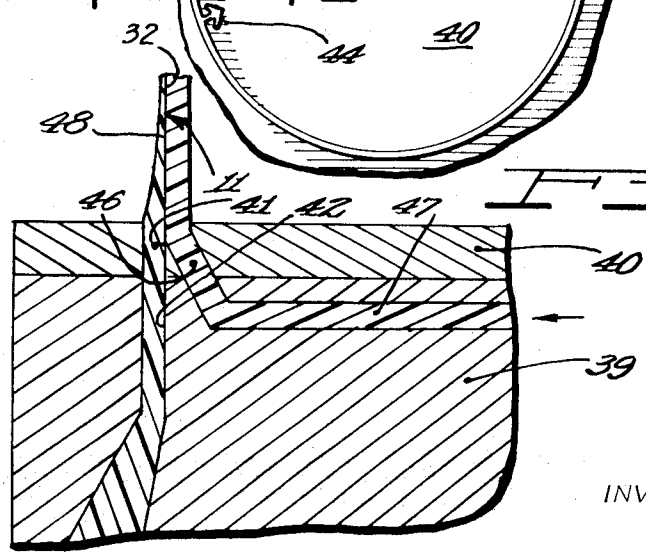

Fig.5

INVENTOR.

Mijorad Skendzic

BY Hill, Sherman, Meroni, Gross & Simpson ATTORNEYS

METHOD OF MAKING A PILFER PROOF PACKAGE

BACKGROUND OF THE INVENTION

This invention relates generally to the field of containers and more particularly to pouchlike containers made of plastic sheet-form material such as plastic film. Containers of this general description are being used in increased numbers for a wide variety of applications. In some instances the containers are not intended to be reused once opened but in other instances the containers are provided with recloseable fastening means which enable them to be used repeatedly, that is, to be selectively opened and closed.

One form of fastening means which is used in many applications including the packaging field comprises a pair of cooperating elongated transversely interlocking members formed on the inner faces of the opposite walls of the container in face-to-face relation. The interlocking members are closed merely by pinching or pressing them together in a transverse direction and across the entire length thereof. Generally, only light finger pressure is required. The interlocking members are separated to open the container merely by applying thereto a transverse force away from one another across the length thereof. Once again only a moderate force is generally required.

In order to facilitate separation of the interlocking members many containers which include such fastening means also include flanges extending slightly beyond the interlocking members so that the flanges can be grasped by the fingers and pulled apart to separate the interlocking members. Usually such flanges merely comprise an extension of the plastic sheet-form walls of the containers. The interlocking members are also generally constructed of plastic and formed integrally with the plastic film which forms the walls of the container. The film which forms the container wall and the interlocking members may both be extruded simultaneously and integrally with one another from a single extrusion die.

In instances in which plastic containers having such interlocking members are used as packages in the sale of goods, certain problems have been experienced as a result of the premature opening of the container.

For example, where such containers are used in the packaging of perishables, the plastic fastening members may become separated in handling, thus eliminating the desirable airtight seal thereacross. In other instances in which such containers are used in the packaging of items such as nails, screws, nuts and bolts or the like which can be pilfered, the interlocking fastening members may be intentionally opened so that the contents or a portion thereof may be stolen from the bag.

As a consequence there is a need for a plastic container having selectively openable and closeable fastening means to permit reuse of the container but which nevertheless includes means for ensuring a completely sealed condition until the container is intentionally opened by the bona fide user or for providing a visual indication that the container has been prematurely opened. Fulfillment of this need is an object of the present invention.

SUMMARY OF THE INVENTION

In light of the foregoing the present invention may be summarized as comprising a plastic container as generally described but including means for ensuring a completely sealed condition of the container until it is opened by the bona fide user, thus not only preventing loss of an airtight seal but also preventing loss of the contents through pilfering or otherwise.

More specifically the invention may be defined as comprising a completely enclosed plastic bag having formed on one wall thereof a plastic ribbon or bead which can be removed to open the container and which is constructed and arranged so as to have a tear strength which is greater than that of the adjacent portion of the container wall on which it is carried, thereby ensuring that the ribbon itself does not break upon application thereto of a pulling and removing force but instead that the container wall itself tears to provide a narrow slit or gap in the area formerly occupied by the ribbon.

In order to facilitate visual location of the ribbon, it may be colored differently from the adjacent container wall. The invention also contemplates the utilization of the ribbon or bead on a container having flanges adjacent the interlocking fastening members which are continuous with one another so that, in reopening the container after the ribbon has been removed, the user must insert his fingers into the slit or gap in order to separate the flanges and thus the interlocking members. The edges of the slit or gap are irregular and jagged, thus facilitating location of the gap by finger touch. Furthermore, as a result of the jagged edge of the gap the visual location of the gap is also substantially facilitated, resulting in the attainment of other objects of the invention.

Many other features, advantages and additional objects of the present invention will become manifest to those versed in the art upon making reference to the detailed description which follows and the accompanying sheets of drawings in which preferred structural embodiments incorporating the principles of the present invention are shown by way of illustrative example only.

BRIEF DESCRIPTION OF THE DRAWING

FIG. 1 is an isometric view of a plastic container constructed in accordance with the principles of the present invention.

FIG. 2 is an enlarged cross-sectional view of the upper portion of the container as taken substantially along lines II—II thereof.

FIG. 3 is an enlarged fragmentary elevational view of the upper portion of the container shown in FIG. 1.

FIG. 4 is a plan view of an extrusion die useful in constructing the container shown in FIG. 1.

FIG. 5 is an enlarged fragmentary cross-sectional view taken along line V—V of FIG. 4.

DESCRIPTION OF THE PREFERRED EMBODIMENT

Referring to FIGS. 1–3 there is disclosed generally therein a reference numeral **10** a plastic pouch, bag or the like container constructed in accordance with the principles of the present invention.

The container **10** comprises a circumferentially continuous cylindrically shaped sheet of plastic film **11** which is flattened to provide a pair of superimposed sidewalls **12** and **13** which are interconnected along a pair of folded spaced end wall sections **14** and **16** which may be conveniently referred to as the upper and lower ends of the container **10**.

Although the above-described arrangement may be preferred for many applications the container **10** may also be constructed of a pair of individual sheets of plastic film which are superimposed one upon the other and heat-sealed at the upper and lower extremities to enclose the same.

In the embodiment disclosed in FIGS. 1–3 one side thereof as indicated, for example, at reference numeral **17**, is closed by means of a heat-seal or the like connection and then the goods are placed within the container. An opposite side **18** is then sealed to completely enclose the goods in an airtight and liquidtight environment. Alternately, the lower end **16** is slit, the sides **17** and **18** are sealed, the goods are loaded into the container through the lower end **16** and the said lower end is then sealed closed. While requiring more operations, this method of filling the container is more adaptable to equipment for filling sheeting with attached interlocking members.

The illustrated embodiment of the container **10** is also provided with means for selectively opening and closing the same for repeated use and to that end may be more particularly characterized as comprising fastening means indicated generally at reference numeral **19** and including a pair of cooperating elongated parallel transversely closeable and releasable interlocking fastening members **20** and **21** formed respectively on inner surfaces **22** and **23** of the container sidewalls **12** and **13**.

The fastening members 20 and 21 are disposed in face-to-face relation in the assembled condition of the container 10 and extend substantially the entire width of the container 10 in spaced parallel relation in the upper end 14 thereof.

The specific configuration of interlocking members 20 and 21 is exemplary of many configurations known in the art with which they share the common characteristic of being closeable as a result of the application in a transverse direction toward one another, of finger pressure along the length thereof. The members 20 and 21 are opened or separated by the application thereto of transverse forces away from one another at any point along said members.

Such fastening members, being well known in the prior art, do not require a more detailed description herein.

As thus described, the container 10 is completely sealed, either by the continuous extension of the plastic film or sheet 10 and sealing of the edges thereof or else by means of a heat seal or the like along all of the edges 14, 16, 17 and 18. The contents of the container 10 can thereupon only be removed by physically tearing the container along one side or edge thereof.

The container 10 thereby affords not only an air and liquid-tight environment but also affords protection against pilfering since a tear in the walls or along the edges of the container is extremely noticable.

It is, nonetheless, desirable to enable the bona fide user of the bag to gain access thereto easily without diminishing the deterrent effect to pilfering of a completely sealed bag. In order to facilitate opening of and access to the container by the bona fide user, a tear ribbon or bead 24 is formed thereon on one sidewall thereof, and the removal of the ribbon 24 has the effect of opening the container 10.

In the embodiment illustrated the ribbon 24 is formed on the sidewall 13 and extends in parallel relation to the interlocking members 20 and 21 and between the interlocking members and the top end 14 of the container 10.

The tear ribbon 24 is also preferably formed of plastic and joined fast to the sidewall 13 so that the two may be considered as being integral with one another. The tear strength of the ribbon 24, however, is substantially greater than that of the sidewall 13, or at least that portion of the sidewall 13 immediately adjacent the tear ribbon 24.

To that end the tear ribbon 24 may be preferably be formed of a thermoplastic substance having different characteristics than the thermoplastic used in the formation of the sheet 11 and the sidewalls 12 and 13. For example, the thermoplastic of which the ribbon 24 is constituted has a greater tear strength than does the plastic of which the sheet 11 is made and may also have a somewhat higher or substantially higher extrusion temperature than that of the plastic of which the sheet 11 is formed.

The ribbon 24 preferably extends across substantially the entire width of the container 10 and in the embodiment illustrated an end portion 26 thereof is formed integrally with the sidewall 13 almost to the edge 18 of the container 10. There may be provided, however, a small space as indicated at 27 between the end of portion 26 affixed fast to the sidewall 13 and the edge 18. A loose end 28 of the ribbon, however, may extend to or perhaps beyond the edge 18 to facilitate the gripping thereof by the user of the container 10.

It is not of vital importance, of course, that the ribbon 24 have a free handle portion 28. It is only necessary that a finger gripping surface be provided at one or both of the ends thereof and that such finger gripping surface comprises a protuberance, embossment, extension of the like which can be easily grasped by the fingers of the user.

To remove the ribbon 24 (and thus to open the container 10) the end 28 is grasped by the user and pulled away from the sidewall 13 and preferably back over the still-joined portion of the ribbon 24. Since the tear strength of the ribbon 24 is greater than that of the adjacent portions of wall 13, the ribbon 24 tears away from the wall to provide an elongated narrow slit or gap 29 between the closed end 14 and the interlocking fastening members 20 and 21.

In order to enable the user to determine more quickly and readily whether the ribbon 24 has been removed and the container 10 opened, the plastic of which the ribbon 24 is constructed may be colored differently than the plastic of which the sheet 11 is colored. In some applications, of course, the sheet 11 may be transparent or substantially so, so that the contents of the container may be visually ascertained and in such circumstances the coloring of the ribbon 24 also affords quick identification thereof. While the color red is preferred because of its eye-impact, other colors may be utilized and the ribbon may furthermore be color-coded to distinguish between the contents of different containers.

As shown in FIG. 2 the sidewall 13 does not terminate at top and bottom edges 30 and 31 of the ribbon 24 but instead extends behind the ribbon as at 32, and is integrally joined to said ribbon. The cross-sectional thickness of the wall portion 32, however, is preferably substantially less than the cross-sectional thickness of the sheet 11 and the sidewall 13 in general. As a result of this configuration, the ribbon 24 does not pull away cleanly from the sidewall 13 but instead has the effect of tearing the sidewall 13 at the junctures of the thin portion 32 and the adjacent generally thicker portions of the wall 13.

As shown in FIG. 3 the tearing effect of the ribbon 24 on the sidewall 13 provides jagged or ragged and irregular edges 33 and 34 of the slit or gap 29. THe jagged edges 33 and 34 are preferred to flat, even, knifelike edges for the following reasons.

First of all, in instances wherein the container 10 is provided with the selectively releasable fastening means 19, the interlocking members 20 and 21 must be separated in order to gain access to the container 10. Portions 36 and 37 of the sidewalls 12 and 13 between the interlocking members 20 and 21 and the closed upper end 14 are used as gripping flanges for separating the members 20 and 21. The jagged edges 33 and 34 thus enable the user to ascertain the location of the gap 29, so that the flanges 36 and 37 may be grasped by the fingers much more quickly and easily than would knifelike edges. Thus, to locate the gap 29 the user need only move the tips of his fingers across the upper portion of the sidewall 13 and, because of the jagged edges 33 and 34, the tips of the fingers will be immediately keyed in on the gap 29.

Secondly, however, the jagged edges 33 and 34 also have the salutary effect of providing or of facilitating visual location of the gap 29, even in instances wherein the plastic which comprises the sheet 11 and the sidewalls 12 and 13 is clear or transparent. The jagged edges 33 and 34 have light transmitting and reflecting properties which are different from the remaining portion of the sidewall 13 and thus the location of the gap 29 as a result of these differences in light transmission and reflection is easily ascertained.

The present invention also contemplates a method of baking the sheet-form material of which the container 10 is constructed. Preferably the sheet 11 constitutes a tubular circumferentially continuous film as extruded from a die as shown, for example, in FIGS. 4 and 5.

The die, which is indicated generally at reference numeral 38, may be more particularly characterized as comprising a die body 39 and a die plate 40 adjacent the die body. An annular groove 41, the cross-sectional width of which is related to the desired thickness of the sheet 11, is formed in the die plate 40 and is interconnected by means of suitable passages 42 formed in the die body 39 to a source of heated, pressurized, extrudable thermoplastic having predetermined physical characteristics.

The interlocking members 20 and 21 are formed integrally with and of the same thermoplastic material as the sheet 11 by virtue of correspondingly shaped recesses 43 and 44 formed in the die plate 40 and in conducting relation with the flow passage 42.

The tear ribbon 24 may also be formed simultaneously in the same extrusion operation in which the sheet or tubular film 11 and the cooperating interlocking members 20 and 21 are formed. To that end a complementarily shaped recess 46 is

formed in the die plate **40** between recesses **43** and **44** and extends radially outwardly of the annular groove **41**, in contrast with the radially inwardly directed recesses **43** and **44**.

In the illustrated embodiment the recess **46** communicates with a flow passage **47** which is connected to a source of extrudable plastic having physical characteristics different from that of which the plastic forming the sheet **11** and members **20** and **21** possess, at least insofar as tear strength is concerned. This second thermoplastic material issues from the recess or opening **46** onto an outer surface **48** of the tubular film **11** either before or after the plastic film **11** has completely solidified or become finally rigid.

The plastic issuing from the recess **46** may be heated to a temperature above the plasticized temperature of which the film or sheet **11** is made and as the plasticized plastic ribbon **24** is directed onto the outer surface **48** the higher temperature of said ribbon, regardless of whether the film **11** has completely rigidified, will increase the temperature of the film engaged by the ribbon to a point where the thickness thereof will become decreased as indicated in portion **32** thereof in FIG. **2**. Thus the higher the temperature to which the plastic ribbon **24** is heated, the more greatly reduced is the cross-sectional thickness of section **32**, thereby providing a high degree of control over the tear force required to remove the ribbon **24** and the physical characteristics of the jagged edges **33** and **34**.

After the extrudate of the film **11** and the tear ribbon **24** have become rigidified, the ribbon is fully bonded to the continuous surface of the sheet **11** and the two may be considered as being integrally formed. The extrudate issuing from the ribbon recess **46** may, of course, be colored to provide the salutary indicia mentioned hereinabove.

Although minor modifications might be suggested by those versed in the art, it should be understood that I wish to embody within the scope of the patent warranted hereon all such modifications as reasonably come within the scope of my contribution to the art.

I claim as my invention:

1. The method of forming a thermoplastic film for use in making pilferproof containers comprising

extruding on a film of first thermoplastic material having a given cross-sectional thickness, a ribbon or bead made of second thermoplastic material heated to an extrusion temperature sufficient to plasticize the film and reduce the thickness of the portion thereof receiving the ribbon substantially below that of said given thickness and to produce a tear strength therein substantially less than that of said ribbon.

2. The invention as defined in claim **1**, including the step of coloring said second thermoplastic material so that said ribbon may be easily visually distinguished from said film.

3. The method of forming a thermoplastic film for use in making pilferproof containers comprising

extruding a film of sheet-form material made of a first thermoplastic substance from a die, and

extruding from said die and onto the surface of said film a ribbon of second thermoplastic substance having a tear strength appreciably greater than that of said first thermoplastic substance.

4. The method of forming a thermoplastic ribbon on a thermoplastic film for use in making pilferproof containers comprising

extruding a film of sheet-form material made of a first thermoplastic substance,

extruding on said film a ribbon of second thermoplastic substance heated to a temperature appreciably higher than the temperature of that portion of the film receiving said ribbon to reduce the thickness and the tear strength of that portion with respect to the immediately adjacent portions of said film.

5. The method as defined in claim **4**, and including the step of extruding on said film a pair of elongated spaced parallel closeable and releasable transversely interlocking members disposed respectively adjacent said ribbon and made of said first thermoplastic substance.

6. The method of forming material suitable for use in the construction of a bag or the like container comprising

extruding a circumferentially continuous tubular film made of a first thermoplastic substance,

extruding on said tubular film a pair of elongated relatively closely radially spaced parallel transversely closeable and releasable interlocking fastening members made of said first thermoplastic substance, and

extruding on said tubular film between said fastening members and in spaced parallel relation thereto an elongated ribbon made of a second thermoplastic substance.

7. The invention as defined in claim **6**, wherein said fastening members and said ribbon are extruded simultaneously with said tubular film.

8. The invention as defined in claim **6**, wherein said ribbon is extruded at a temperature substantially higher than the extrusion temperature of said tubular film.

9. The invention as defined in claim **6**, wherein said second thermoplastic substance has a tear strength appreciably greater than the tear strength of said first thermoplastic substance.

10. The invention as defined in claim **6**, and including the step of coloring the extrudate of the second thermoplastic substance so that the ribbon may be easily visually distinguished from the tubular film.

* * * * *