Dec. 22, 1931. W. O. AMSLER 1,837,311

METHOD OF AND APPARATUS FOR ANNEALING ARTICLES OF GLASSWARE

Filed June 3, 1926 4 Sheets-Sheet 1

FIG. I.

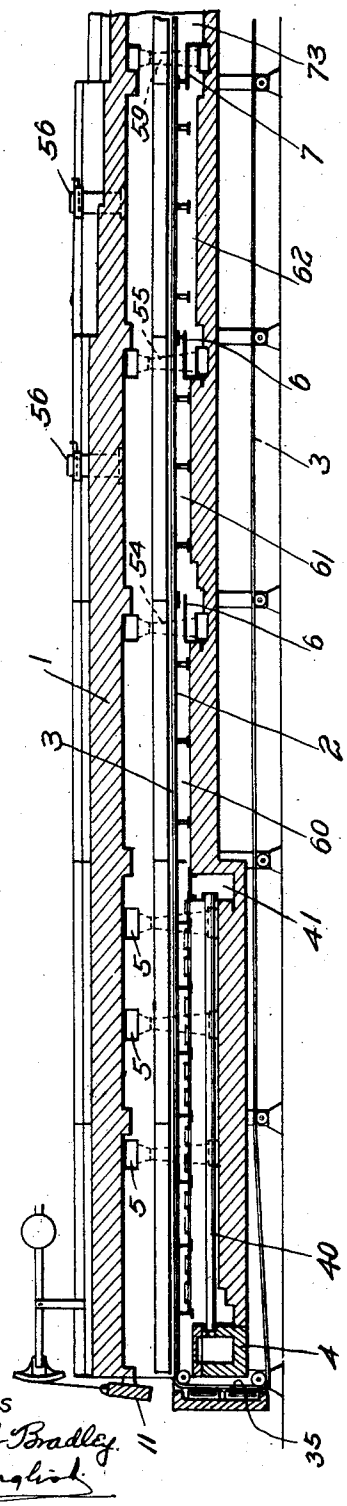

FIG. II.

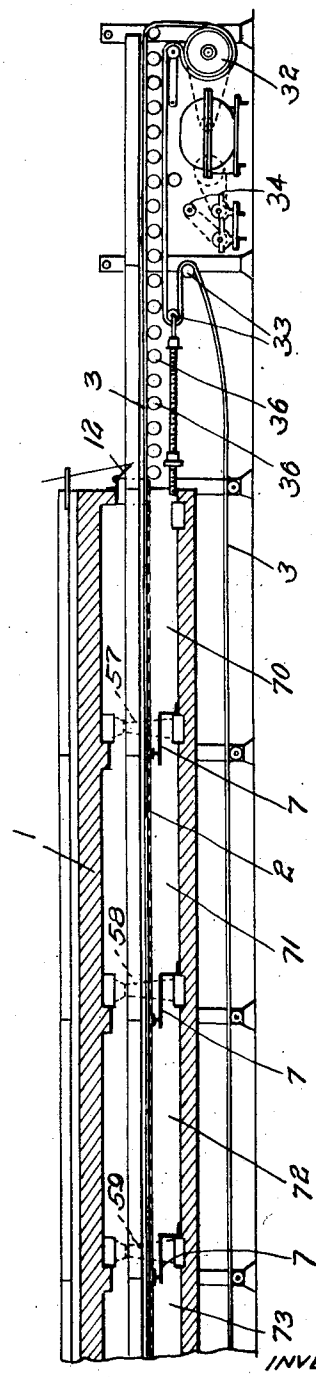

WITNESSES

J. Hebert Bradley

Percy A. English

INVENTOR

Walter O. Amsler

by Christy and Christy

his attorneys

Dec. 22, 1931. W. O. AMSLER 1,837,311

METHOD OF AND APPARATUS FOR ANNEALING ARTICLES OF GLASSWARE

Filed June 3, 1926 4 Sheets-Sheet 2

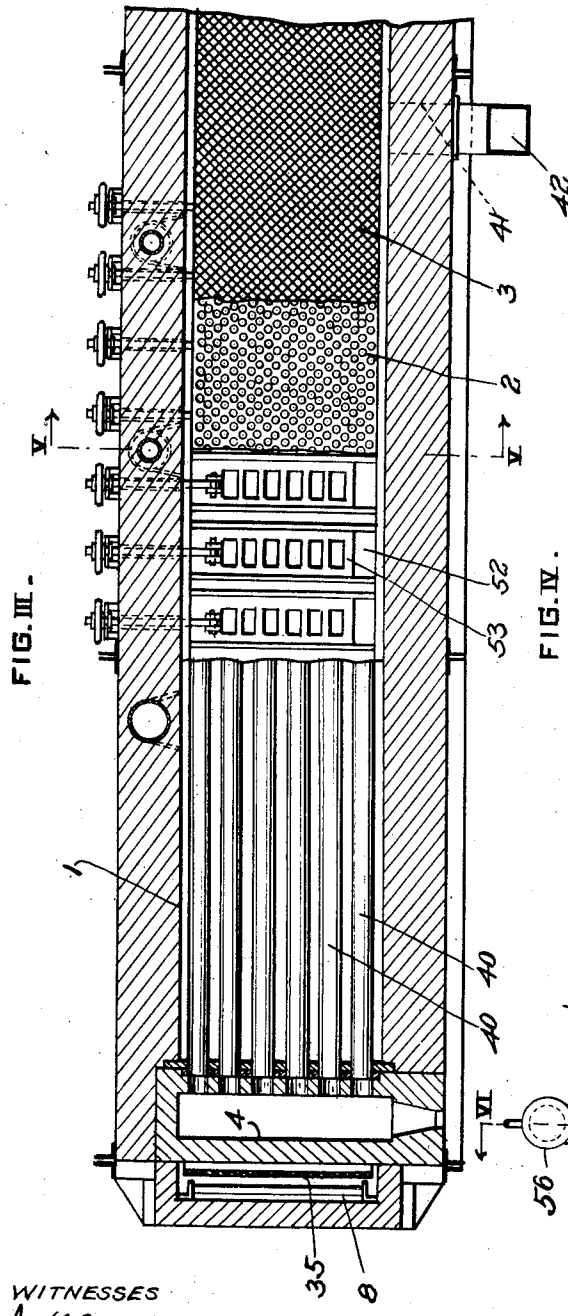

FIG. III.

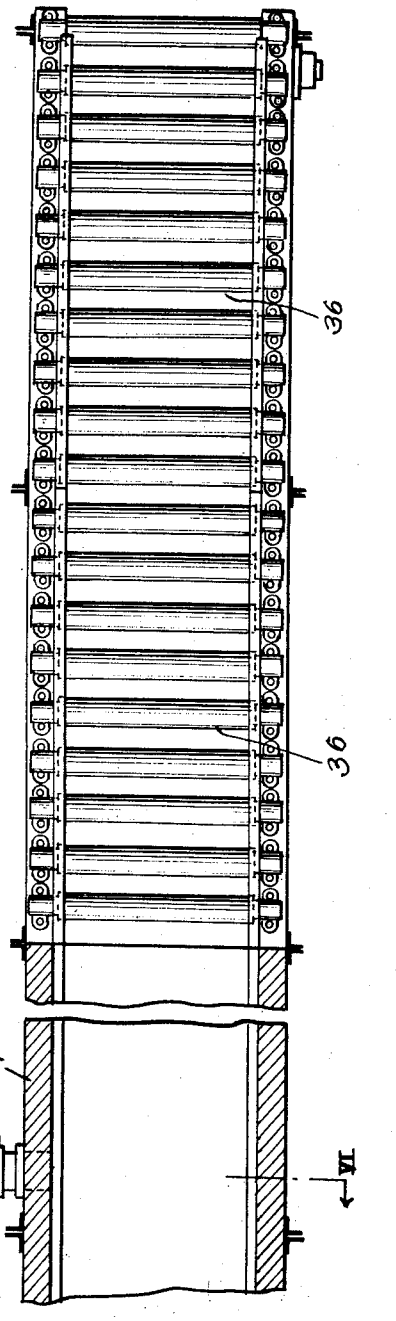

FIG. IV.

WITNESSES

J. Hebel Bradley

Percy A. English

INVENTOR

Walter O. Amsler

by Christy and Christy

his attorneys

Dec. 22, 1931. W. O. AMSLER 1,837,311

METHOD OF AND APPARATUS FOR ANNEALING ARTICLES OF GLASSWARE

Filed June 3, 1926 4 Sheets-Sheet 3

FIG. VI.

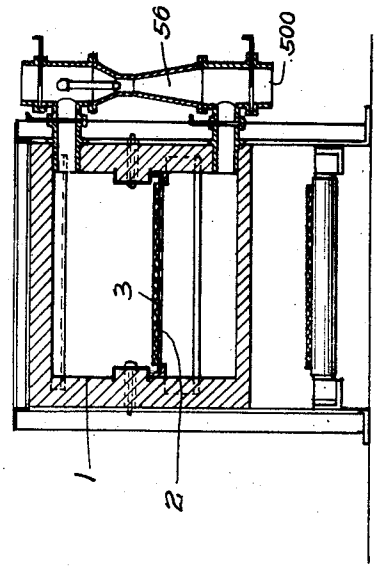

FIG. V.

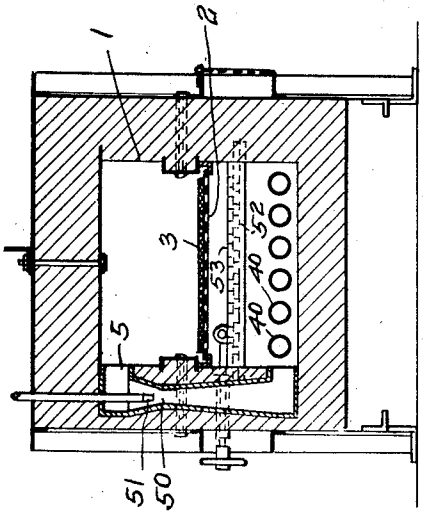

WITNESSES

J. Hebel Bradley

Percy A. Hughes

INVENTOR

Walter O. Amsler

by Christy and Christy

his attorneys

Dec. 22, 1931. W. O. AMSLER 1,837,311

METHOD OF AND APPARATUS FOR ANNEALING ARTICLES OF GLASSWARE

Filed June 3, 1926 4 Sheets-Sheet 4

FIG. VIII.

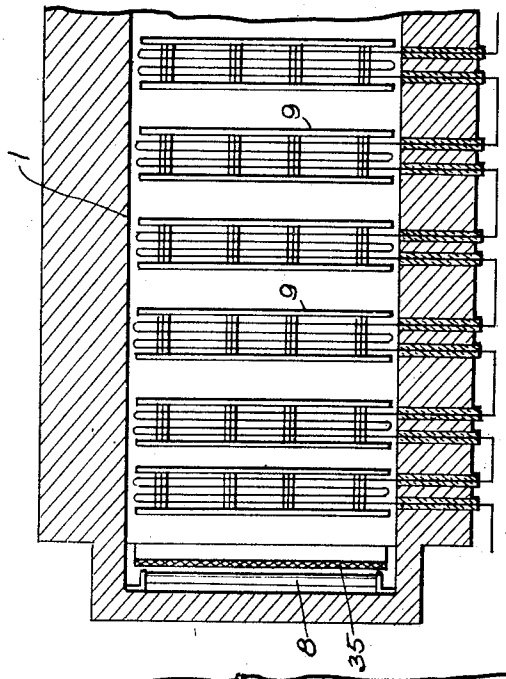

FIG. VII.

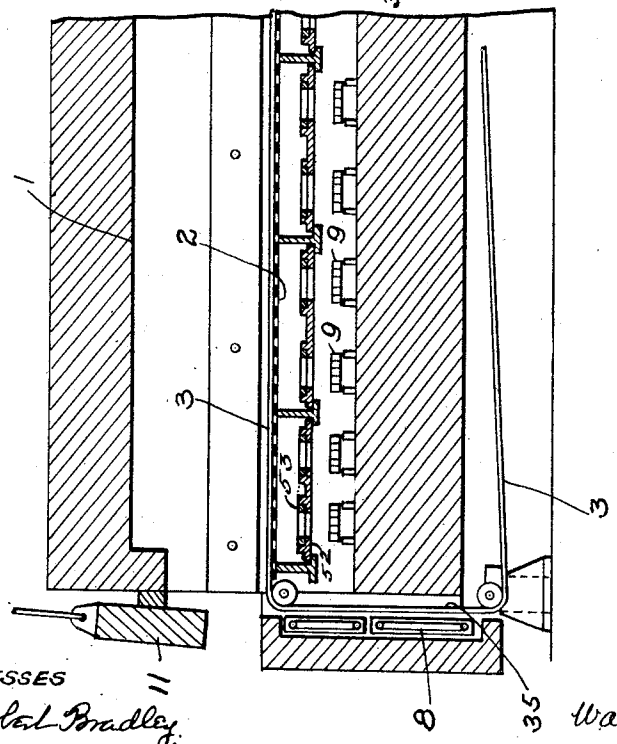

WITNESSES

J. Herbert Bradley

Percy A. English

INVENTOR

Walter O Amsler

by Christy and Christy

his attorneys

Patented Dec. 22, 1931 1,837,311

UNITED STATES PATENT OFFICE

WALTER O. AMSLER, OF TOLEDO, OHIO, ASSIGNOR TO SIMPLEX ENGINEERING COMPANY, A CORPORATION OF PENNSYLVANIA

METHOD OF AND APPARATUS FOR ANNEALING ARTICLES OF GLASSWARE

Application filed June 3, 1926. Serial No. 113,409.

My invention consists in improvements in methods of and apparatus for annealing articles of glassware. The objects in view are economy of operation and adequacy and efficiency of the operation as I conduct it.

My improvements in method are found in maintaining a stream of clean hot air or equivalent gas, inert in the sense that it has no effect to cause injury or blemish to the ware under treatment, and in causing the ware to be treated to advance transversely through such stream of hot air. The improvements in method further consist in causing the stream of hot air, or equivalent gas, to flow in closed cycle, whereby the same body of air or gas repeatedly flows over and immerses the ware under treatment. The improvements in method further consist in causing this cycling stream of hot air, or equivalent gas, to progress from cycle to cycle and to flow over and immerse the ware under treatment at successive points in the pathway along which the ware advances. The improvements in method further consist in causing two streams of air, or equivalent gas, the one hot the other cold to flow in closed and progressive cycles and in their progress to flow over and to immerse the ware under treatment at successive points along the pathway of the ware, the two streams progressing oppositely: the hot stream beginning at the intake end of the pathway for the ware, advancing in the direction of the progress of the ware, along its pathway; the cold stream, beginning at the discharge end of the pathway for the ware, advancing in the direction opposite to that of the progress of the ware along its pathway.

My improvements in method are attained in the operation of the apparatus shown in the accompanying drawings, and in that apparatus also substantive matter of invention is found.

Figs. I and II together constitute a view in vertical longitudinal and medial section of annealing apparatus embodying and in its operation achieving the method of my invention; Fig. I shows at the left the intake end of the apparatus and Fig. II shows at the right the discharge end, and, as will more clearly appear in the sequel, the intervening stretch of annealing chamber may be extended to indefinitely greater length or diminished to a length less than that indicated in Figs. I and II. Fig. III is a diagrammatic showing, to larger scale and in horizontal section, and on planes of section successively higher (from left to right), and serves to illustrate more minutely the structure of the apparatus adjacent the intake end. Fig. IV is a view in horizontal section and at the delivery end. From the showing of Fig. IV the conveyor itself is, for purposes of illustration, omitted. Fig. V is a view in vertical and transverse section, on the plane indicated at V—V, Fig. III. Fig. VI is a view in vertical and transverse section, on the plane indicated at VI—VI, Fig. IV. Figs. VII and VIII are views in vertical and horizontal section of the tunnel at its intake end, and here a variation in detail is illustrated.

A long chamber 1 is provided throughout its extent with a horizontal, foraminate partition 2 spaced at an intermediate point in its height. The position of this partition is indicated in Figs. I and II, and its foraminate character is indicated in Fig. III. An endless belt conveyor 3 extends through the chamber 1 and rests upon and is supported by the partition 2. The characteristics of the conveyor are flexibility and permeability to a stream of gas.

Figs. I and II show the mounting of the endless conveyor upon suitable sheaves and around a driving drum 32 and through a slack take-up device 33. A driving motor for the conveyor is indicated at 34. These features form no part of my present invention, they are known, and the diagrammatic showing suffices.

Heating apparatus is arranged at the intake end of the structure, the left-hand end, Figs. I and III. The floor of the chamber at the intake end is lowered, and here is arranged a furnace 4 with flues 40 leading to a header 41 and thence to a stack 42. The flues 40 constitute a battery, in this instance six in number; they are arranged side by side, in a common plane, and beneath partition 2; they extend longitudinally, from the anterior end of the chamber rearward. Externally these flues 40 are exposed to the air within the chamber which surrounds and envelops them. They are made of heat-conductive material, and their office is to convey and impart to the air which envelops them the heat of the gases which flow through them from the furnace 4 to the stack 42. The air surrounding these flues 40 and flowing over them rises through partition 2 and through conveyor 3 and envelops the ware borne upon the conveyor. This upward sweep of hot air envel oping the ware, brings it to and maintain it at the desired temperature.

Circulation of the air may be maintained, and upward streaming of heated air from around the flues 40 may be assisted, by forming near the roof of the chamber one or more openings 5 from which air flues descend to open again to the chamber at the floor and beneath partition 2. These air flues are preferably formed wholly within the masonry walls of the chamber, and, as particularly shown in Fig. V, these flues may in shape become Venturi tubes 50, and they may be provided with nozzles 51 for stream-impelling jets of compressed air or equivalent fluid. I have shown three such air circulation flues, and on one side only of the chamber. Manifestly the number may be indefinitely increased, and they may be arranged on both sides of the chamber.

Proper control of the circulation so set up and maintained is accomplished by means of grids 52 with cooperating sliding dampers 53 arranged between the heater members 40 and partition 2.

I provide, as I have said, not for the circulation merely of the stream of air which maintains the ware at the desired degree of temperature; I provide also for the flow of air in progressive cycle along the pathway in which the ware advances, that it may flow around and immerse the ware at successive points in its progress, and, being properly controlled in temperature, may be effective gradually to bring the ware after a sufficient interval of time, from the high temperature of annealing to reduced temperature, and eventually to a temperature at which it may without harm be exposed to atmospheric conditions. To this end the space beneath partition 2 is by plates 6 subdivided into spaces 60, 61, 62, etc. The number of plates 6 here shown amounts to two, but it will be understood that the chamber may be prolonged and the plates increased in number indefinitely, according to the particular conditions of heat to be established and maintained. From the chamber space above partition 2 and immediately above space 60 an air flue 54 leads downward and delivers to space 61; from the upper chamber space immediately above space 61 an air flue 55 leads to space 62; etc. These air flues 54, 55, etc. may be structural counterparts of flues 50 already described, and they too may be arranged in the chamber walls on one or on both sides. It will be perceived that by such provision the annealing stream of air advances in progressive cycle along the chamber and flows over the ware at successive points in its path of progress from the intake end of the furnace toward the discharge end. Since the heating apparatus is situated adjacent the intake end of the chamber, the stream of air as it advances in the progressive cycle described, will grow cooler, and it is a matter of proportioning of parts, so to adjust the rate of advance of the ware to the rate of cooling of the air, as to establish the optimum condition for annealing. The stream of air gradually cooling may be caused to flow in continuing progressive cycle, throughout all the length of the chamber. I show, however, valved chimneys 56 through which properly controlled escape may be had, and such provision lends itself to the further refinement which I am about to describe: provision, namely, for the taking in of atmospheric air at the discharge end of the chamber, and causing it similarly to flow in progressive cycle but in opposite direction from the delivery end toward the intake end of the chamber.

Similarly as the space beneath partition 2 is toward the intake end of the chamber subdivided by plates 6 into chambers 60, 61, 62, etc., this space at the delivery end is by the plates 7 subdivided into chamber 70, 71, 72, etc. And similarly as the air flues 54, 55, 56, etc. connect the upper space above each chamber with the next succeeding chamber, so the air flues 57, 58, 59, etc. connect the upper space above each chamber 70, 71, 72, etc. with the next space, but in opposite direction. The air flues may be built as already described; but, additionally, and as particularly shown in Fig. VI, they are preferably arranged externally of the chamber walls, which here it will be observed are of diminished thickness, and they are provided with valve controlled ports for taking, in properly controllable quantities, supplementary volumes of atmospheric air.

Similarly as the air heated by the furnace at the intake end of the chamber advances from left to right, first maintaining the desired temperature and then gradually dissipating the heat, so the stream of air enter-

ing at the delivery end (augmented, if need be, by supplies taken in at the air flues) takes up heat from the ware and carries it from right to left.

This incoming right-to-left stream progressing cyclically, may also find exit at one or both of chimneys 56.

It will further be perceived of the flues 57, 58, 59, etc. that they are additionally provided with valve-controlled exit openings 500, and herein is provision adapted to cooperate in effect with chimneys 56 for the proper control of the escape of air, whether advancing from intake or from discharge end of chamber 1. Indeed, these exit openings may in operation wholly take the place of the chimneys, which then remain closed.

It will be perceived that these two oppositely advancing cyclic streams of air, the one initially hot, the other initially of atmospheric temperature, meeting and finding exit adjacent their point of meeting, have a common effect upon the ware of causing the temperature to diminish at a gentle gradient from the maximum required for annealing to atmospheric temperature.

The conveyor 3 on its return travel, as it approaches its ware-receiving reach at the intake end of the leer advances vertically, between the wall of furnace 4 and an end wall of the structure. This portion of the extent of the conveyor is particularly indicated by the numeral 35. Adjacent this portion of the pathway of advance of the conveyor an electric heater element 8 is arranged, and it serves to heat the conveyor as it approaches its ware-receiving reach to a temperature approximating that of the ware.

The further provisions for the handling of the ware while it is subject to the instrumentalities described and in the manner described need no particular elaboration. The leer chamber 1, otherwise open-ended, is provided at its intake with a suitable door 11, and at its discharge end it may be provided with a curtain or flap 12. Beyond the delivery end of the leer chamber the horizontal course of the conveyor 3 may be prolonged by causing it to advance upon a series of rollers 36. These are features well known in the construction of annealing furnaces and require no further mention here. Ware introduced at the intake end of the leer chamber, the left-hand end, Fig. I, rests upon the conveyor and is carried by the conveyor from left to right through the leer chamber and eventually into the open air. And from the portion of the conveyor which extends in horizontal course beyond the delivery end of the leer chamber the annealed ware is carried away by suitable instrumentalities. In its advance through the leer chamber the ware is subject to the action of the instrumentalities described, and its annealing is effected.

In Figs. VII and VIII I show alternative means for heating the circling stream of air to annealing temperature. In place of a furnace such as shown at 4 in Figs. I and III, with its heat-giving flues 40, I employ in this case electric heater elements 9. There is preferably a plurality of these elements arranged in succession along the annealing chamber adjacent its intake end. The grids 52 with their dampers 53 are conveniently retained, and a heating element 9 is conveniently arranged beneath each grid. The elements are elevated sufficiently from the floor of the chamber, that the cyclic flow of the stream of air may be maintained. Each electric heating unit consists essentially of a filament heated by the flow of electric current through it; but such heating units are known and the particular construction of the unit forms no part of my present invention. I show the electric heater as convenient and suitable alternative means for effecting my end.

At the beginning of the specification I remarked that the heating medium might be air or other inert gas. Manifestly if the apparatus as it is shown be set up and operated in a chamber filled with some other inert gas than air, the alternative would be achieved, and the engineer will know without further illustration that the provision of an ante-chamber for the entering ware, supplied with such other inert gas, and the provision of similar ante-chambers for such other entrances as may be used will be effective to achieve annealing in the atmosphere of the particular sort which may be preferred. Of course dilution of air with such inert gas may be more or less complete as the engineer may desire.

I claim as my invention:

1. The method herein described of annealing articles of glassware which consists in maintaining a solid body in heated condition, causing a stream of gas flowing in closed cycle to flow over such body, and causing the articles of glassware to advance through such stream.

2. The method herein described of annealing articles of glassware which consists in causing the articles to be treated to advance along a pathway, maintaining a solid body in heated condition, and causing a stream of gas advancing in cyclic course to flow over said body and thereafter repeatedly to flow over and envelop the articles under treatment and in successive portions of their pathway of advance.

3. The method herein described of annealing articles of glassware which consists in causing the articles of glassware to advance along a pathway, maintaining a solid body in heated condition, and in causing a stream of gas flowing in closed cycle to flow over such body and thereafter repeatedly and at successive portions of the pathway of ad-

vance to flow over and envelop the advancing articles.

4. The method herein described of annealing articles of glassware which consists in causing the articles of glassware to advance along a pathway, in causing a stream of initially heated gas flowing in closed cycle repeatedly and at successive portions of the pathway from the intake toward the delivery end of the pathway of advance, to flow over and envelop the advancing articles, and in causing a second stream of cold gas flowing in closed cycle, repeatedly and at successive portions of the pathway from the delivery toward the intake end of the pathway, to flow over and envelop the advancing articles.

5. In apparatus for annealing articles of glassware, a heat-giving body, means for causing a stream of gas to flow in closed cycle and in such flow to submerge said heat-giving body, and means for causing the articles to be treated to advance through such stream.

6. In apparatus for annealing articles of glassware, a heat-giving body, means for causing the articles to be treated to advance along a pathway, means for causing a stream of gas to flow over said heat-giving body and thereafter to flow repeatedly across such pathway at successive portions of its extent.

7. In apparatus for annealing articles of glassware, means for causing the articles to be treated to advance along a pathway, means for causing two streams of gas advancing from opposite ends of the pathway to flow repeatedly across such pathway at successive portions of its extent, and means for heating the gas of one of such streams.

8. In a glass leer a stationary, permeable, horizontally extending partition, a permeable conveyor adapted to rest upon and to advance upon said partition, and means for maintaining a stream of hot gas vertically through partition and conveyor.

9. The apparatus defined in claim 8, together with means for regulating stream-flow.

10. In a glass leer an annealing chamber, a stationary, permeable, horizontally extending partition arranged within the annealing chamber, a permeable conveyor adapted to rest upon and to advance upon said partition, a flue in the chamber wall opening above and below to the chamber, and means for heating gas at one point in the pathway for cyclic flow of gas so established.

11. The apparatus defined in claim 10, together with means for accelerating flow of gas in cyclic course through annealing chamber and flue.

12. The apparatus defined in claim 10, together with means for introducing atmospheric air into said flue.

13. The apparatus defined in claim 10, the heating means consisting of a furnace with heat-giving flues extending across the pathway of cyclic flow of gas.

14. In annealing apparatus for articles of glassware the combination with a leer chamber and means for causing articles under treatment to advance through such chamber, of a vertically extending flue opening above and below to said annealing chamber, and a valve-controlled port opening from said flue to the open air.

15. In annealing apparatus for articles of glassware the combination with a leer chamber and means for causing articles under treatment to advance through such chamber, of a vertically extending flue opening above and below to said annealing chamber, flow-impelling means arranged within said flue, and two valved openings in said flue arranged one above and the other below said flow-impelling means.

16. In annealing apparatus for articles of glassware, an elongate leer chamber, means for causing a stream of gas flowing in progressive cyclic course to sweep repeatedly through the leer chamber at successive portions of its longitudinal extent, and means arranged at an intermediate point in the extent of the leer chamber for delivering from the leer chamber advancing volumes of gas.

17. In annealing apparatus for articles of glassware an elongate leer chamber, means for causing two streams of gas advancing from opposite ends of the leer chamber to flow in progressive cycles and repeatedly to sweep through the leer chamber at successive portions of its longitudinal extent, and means arranged intermediate the ends of the leer chamber for delivering from the chamber the advancing volumes of gas.

18. In apparatus for annealing articles of glassware the combination of a leer chamber, means for causing the articles to be treated to advance through the chamber at an interval above the bottom thereof, heating means arranged beneath the pathway of advance of the articles, means for causing gas to flow in ascending stream from such heating means over articles advancing through the leer chamber as aforesaid, and stream-controlling means arranged intermediate said heating means and the path of advance of the articles, such controlling means including a partition with orifices of variable area.

19. The lehr comprising a tunnel, a reticulated conveyor belt therein for supporting ware, supporting means for said belt comprising an open structure and means for heating the tunnel located between said belt and the bottom of the tunnel.

20. The lehr comprising a tunnel, a reticulated conveyor belt therein for supporting ware, supporting means for said belt comprising an open structure and means for heating the tunnel located between said belt and

the bottom of the tunnel, said heating means being below said open structure.

21. The lehr comprising a tunnel, a reticulated conveyor belt therein for supporting ware, supporting means for said belt comprising a structure which does not completely separate the upper and lower portions of said tunnel and means for heating the tunnel located beneath said structure.

22. The lehr comprising a tunnel, a reticulated conveyor belt therein for supporting ware, supporting means for said belt comprising an open structure and electrical heating means in said tunnel located between the belt and the tunnel bottom.

In testimony whereof I have hereunto set my hand.

WALTER O. AMSLER.