No. 745,746. PATENTED DEC. 1, 1903.

J. L. WARE.

METHOD OF MANUFACTURING VISES.

APPLICATION FILED MAR. 21, 1901.

NO MODEL. 2 SHEETS—SHEET 1.

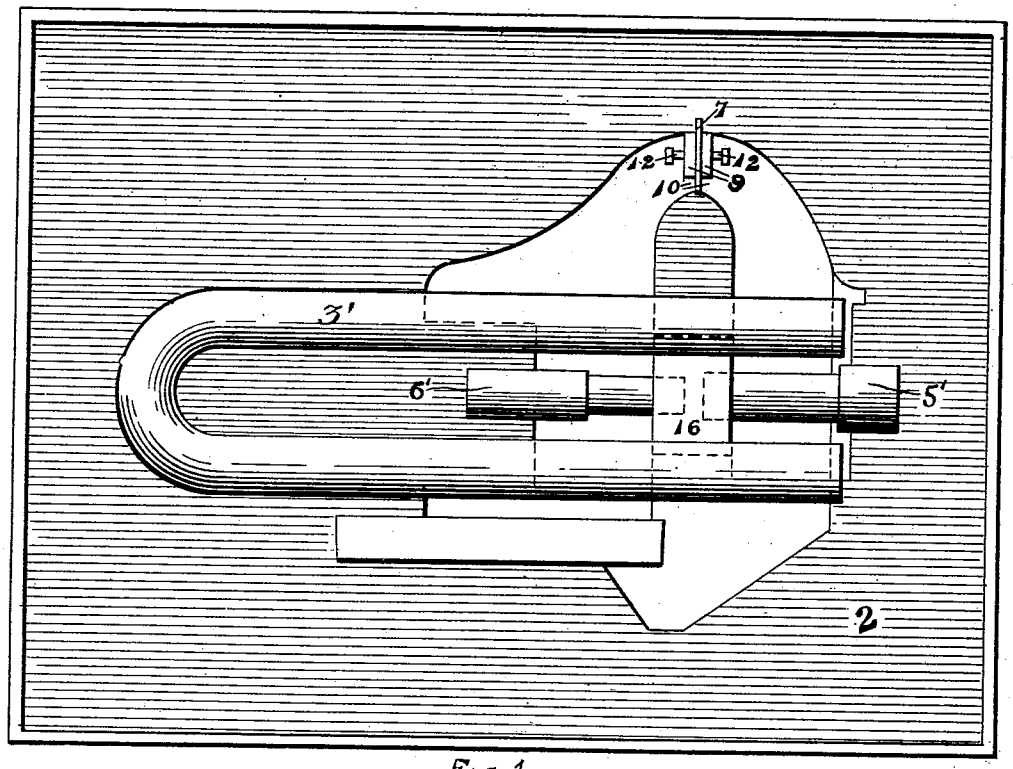

Fig. 1.

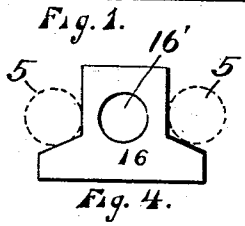

Fig. 4.

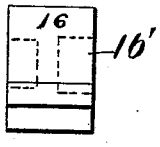

Fig. 5.

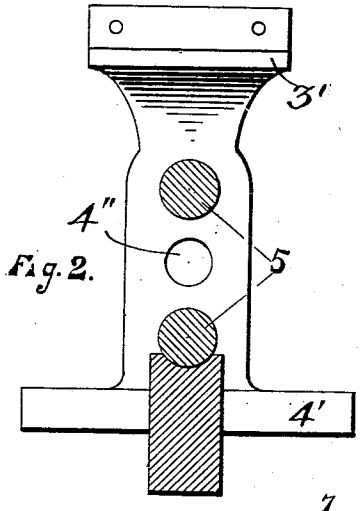

Fig. 2.

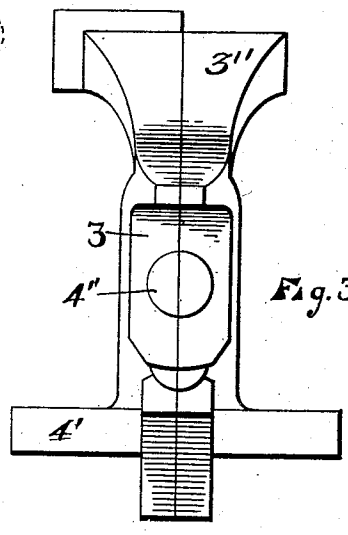

Fig. 3.

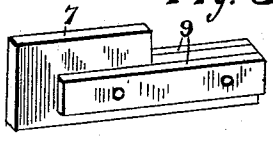

Fig. 8.

WITNESSES

E. G. Stone

Richard Paul

INVENTOR

JOSEPH L. WARE

BY Paul & Hawley

HIS ATTORNEYS

THE NORRIS PETERS CO., PHOTO-LITHO., WASHINGTON, D. C.

No. 745,746. PATENTED DEC. 1, 1903.

J. L. WARE.

METHOD OF MANUFACTURING VISES.

APPLICATION FILED MAR. 21, 1901.

NO MODEL. 2 SHEETS—SHEET 2.

Fig. 6.

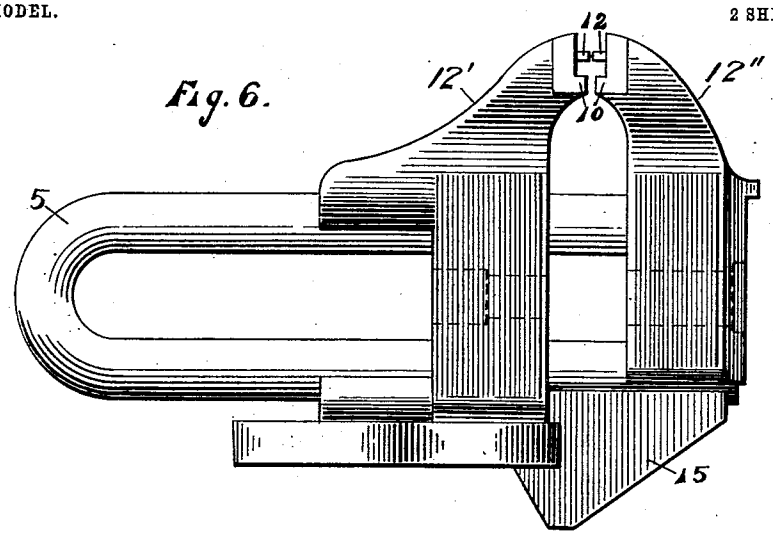

Fig. 10.

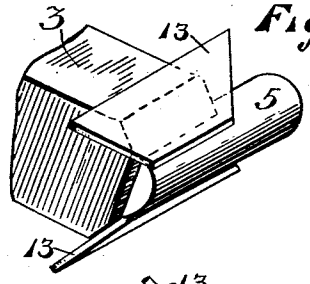

Fig. 9.

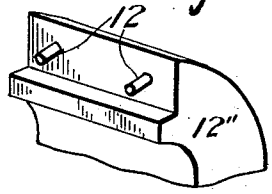

Fig. 11.

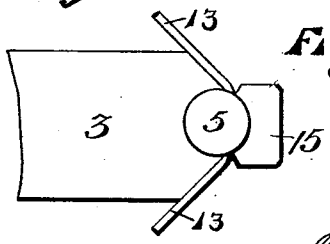

Fig. 7.

WITNESSES

E. G. Stanton

Richard Paul

INVENTOR

JOSEPH L. WARE

BY Paul & Hawley

HIS ATTORNEYS

THE NORRIS PETERS CO., PHOTO-LITHO., WASHINGTON, D. C.

No. 745,746. Patented December 1, 1903.

UNITED STATES PATENT OFFICE.

JOSEPH L. WARE, OF ST. PAUL, MINNESOTA.

METHOD OF MANUFACTURING VISES.

SPECIFICATION forming part of Letters Patent No. 745,746, dated December 1, 1903.

Application filed March 21, 1901. Serial No. 52,124. (No model.)

To all whom it may concern:

Be it known that I, JOSEPH L. WARE, of St. Paul, Ramsey county, Minnesota, have invented certain new and useful Improvements in Methods of Manufacturing Vises, of which the following is a specification.

This invention relates to improvements in methods of manufacturing vises; and the object of the invention is to provide a new and improved method of manufacturing at a low cost a steel-armed machinist's vise.

The invention consists generally in forming a vise at a single casting with a fixed and movable jaw and with a yoke or bar, either single or double, united in the casting process to the movable jaw and arranged to slide through an opening or openings in the fixed jaw.

In the accompanying drawings, forming part of this specification, Figure 1 is a plan view of a mold that is employed in carrying out my invention. Fig. 2 is a section of the pattern from which the vise-mold is made. Fig. 3 is an end elevation of the pattern for making the vise-mold. Fig. 4 is a side elevation of the block that is preferably placed in the mold between the parallel bars of the yoke to prevent them from being drawn together in the casting operation. Fig. 5 is an edge view of the same. Fig. 6 is a side elevation of the vise-casting as it is removed from the mold. Fig. 7 is a longitudinal section of a vise constructed by my improved method. Fig. 8 is a perspective of the core and print for the jaw face-plates. Fig. 9 is a perspective of a portion of a jaw. Fig. 10 is a perspective showing the parting-plates at the intersection of the jaws and bar. Fig. 11 is an end view of the same.

In carrying out my improved method of manufacturing vises I provide an ordinary sand mold, in which the vise is cast, and by a single casting operation I make a complete vise, requiring only when it is removed from the mold to have the opening for the screw threaded and the adjusting-screw inserted therein.

In the drawings, 2 represents the mold in which the vise is cast. The mold is made by means of the pattern 3 and a suitable core-print 3′ for the space to be occupied by the bar or yoke 5, which is left in the mold and which becomes a part of the vise. The pattern 3 has jaws 3″, a base 4′, and a hole 4″ for the adjusting-screw. A parting-strip 7, preferably of metal, is arranged to form a division between the two parts of the mold and to separate the jaws at this point. The core metallic plate 9 is arranged on each side of the parting-strips 7 to form shoulders 10, which support the steel face-plates 11. Rivets 12 are placed in holes in the cores and are cast in the stationary and movable jaws 12′ and 12″, with their ends projecting out over the shoulders 10. The face-plates rest upon the shoulders 10 and are rigidly secured to the jaws by means of the projecting ends of the rivets. The parting-strip extends beyond the cores at the top and on the side and enables me to conveniently level and plumb the cores after they are placed in the mold. The arm 5 is preferably of the U shape shown and is placed in the mold with its parallel arms at right angles to the plane of the jaw-faces. The forward portion of the lower arm serves as a parting at that portion of the mold which forms the lower end of the movable jaw to separate the two jaws from each other at that point in the casting operation.

I have found in molding that the sand will be drawn out to such a thin edge between the pattern and the lower arm that in casting the molten metal will wash away the sand and form a film or web between the jaws, necessitating additional labor in finishing the vise. To obviate this difficulty, I prefer to provide thin metal parting-strips 13, resting upon the lower arm and separating the jaws, so that in casting any union of the same will be prevented.

In Figs. 10 and 11 I have shown a portion of the pattern of the lower jaw 3, a section of the lower arm 5, and the parting-plates resting upon them. To indicate their relative positions in the mold, I have also shown in Fig. 11 a portion of the upper-jaw pattern and the position of the parting-strips with respect thereto. The pattern 3 conforms to the shape of a finished vise. It is made in two halves in the usual way. Core-prints are provided for the space that is to be afterward occupied in the mold by the steel arm, the steel jaw-facings, and by a suitable core for the screw-hole.

In Fig. 1 I have shown the mold after the pattern has been removed, leaving the cavity for the metal to be poured into, and showing the bent steel arm as it lies in the mold and also showing the screw-core to make the openings in the two jaws. The jaw-facings 9 are also shown in position in the mold. When the metal is poured into the mold, it will form about the ends of the upper portion of the steel arm 5 in the forward part of the mold and about the upper half of the forward end of the lower part of the arm in the same part of the mold. The metal will also form around the intermediate portions of the steel arm 5; but the parts of this arm that are to be within the stationary jaw of the completed vise are covered with a thin coating of glue and sand or in like manner protected from direct contact with the molten metal, whereby after the metal is poured and mold opened the steel arm may be loosened in the stationary jaw, so that it will slide freely therein. The parts of the steel arm that come within the front or movable jaw are provided with a series of notches or recesses 14, (see Fig. 7,) into which the metal runs and whereby the ends are securely fastened in the jaw cast thereon. A recess 14′ is provided between the ends of the steel arm to receive the adjusting-screw. The ends of the steel arm may also be tinned before the arm is placed in the mold, so that a practical weld is obtained between the jaw and the arm when the metal is poured into the mold and forms around said ends. It will be noted that the lower end of the movable jaw 12 is formed around the upper half of the forward end of the steel arm 5 and that the lower part of said arm is in contact with the upper part of a bracket or projection 15, that is integral with the fixed jaw. (See Fig. 7.) In order to prevent the parallel bars of the arm 5 from moving toward each other during the casting process, I prefer to place in the mold a stop or block 16, (see Figs. 4 and 5,) having an opening 5′ through it for the core for the adjusting-screw. (See dotted lines.) This stop is placed in the mold between the cavities that form the two jaws, and the height of the block is just equal to the distance between the two parts of the steel arm 5, so that the parts of said arm are prevented from moving toward each other when subjected to the hot metal in the casting operation. By this means these parts of the arm are caused to retain their parallel position in the finished vise. By this method of forming the vise I am enabled to make a complete vise at a single casting operation, with the exception of threading the hole through the stationary jaw for the adjusting-screw. Otherwise when the vise is removed from the mold it is complete and ready for use. The steel facing-plates 11 are readily secured in the faces of the jaws without any fitting or planing of these parts, and as the steel arm 5 is in position in the casting when it is removed from the mold it is unnecessary to do any planing or fitting of this part to cause one part of the vise to slide freely in the other.

The details of the invention may be varied in many particulars without departing from my invention—as, for instance, instead of using the U-shaped arm I may use in place thereof a single bar or two separate bars, means being provided where the two separate bars are employed for keeping them parallel with each other during the casting operation.

Instead of casting the entire vise with one operation I may form a mold and cast one section or jaw of the vise, then make a second mold, placing the completed section therein, and cast the remaining portion; but while the vise may be manufactured in this way I prefer to cast the entire tool at one operation.

I do not in this application claim the vise herein shown and described, as I have already claimed the same in my application for Letters Patent, Serial No. 682,185, filed the 11th of June, 1898, and allowed the 24th of October, 1900.

Having thus described my invention, I claim as new and desire to secure by Letters Patent—

1. The method of manufacturing vises which consists in forming the mold of the complete vise, removing the pattern, placing the vise-arm in the mold, placing the parting-pieces and jaw-plates in said mold, and filling the mold with molten metal to form the stationary and movable jaws, substantially as described.

2. The method of manufacturing vises which consists in forming the mold of the complete vise, removing the pattern, placing the vise-arm having two parallel bars into the mold, placing a stop between the bars of said arm and filling the mold with molten metal, to form, at one operation, the stationary and movable jaws, and to permanently secure said arm to one of said jaws, substantially as described.

3. The method of manufacturing vises, which consists in forming the mold of the complete vise, removing the pattern, placing a U-shaped vise-arm in the mold, portions of said arm having been previously protected, placing the stop between the parallel bars of said arm and running molten metal into the unoccupied parts of the mold, and thereby forming both jaws of the vise at once upon said arm, and permanently securing the ends of said arm to one of said jaws, substantially as described.

In witness whereof I have hereunto set my hand this 15th day of March, 1901.

JOSEPH L. WARE.

In presence of—
RICHARD PAUL,
M. E. GOOLEY.