July 7, 1959 W. C. GEORGE 2,893,617

NON-BULGING FRUIT BOX

Filed Oct. 19, 1955

FIG.1.

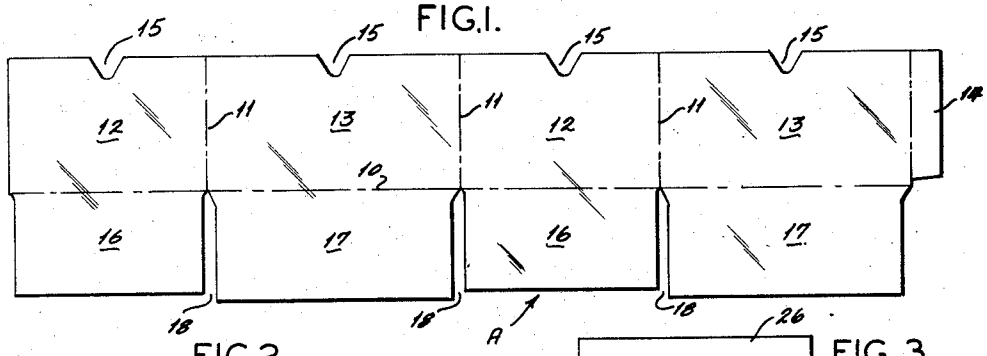

FIG.2.

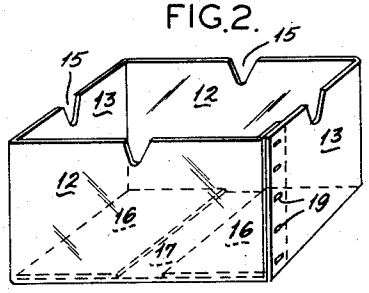

FIG.3.

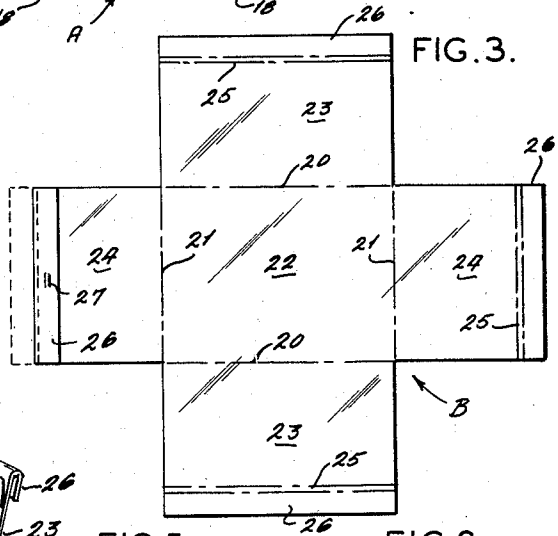

FIG.4.

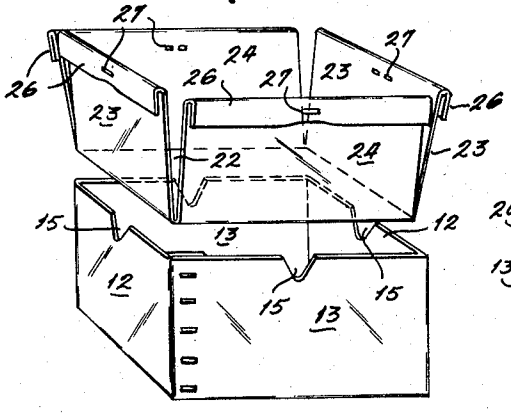

FIG.5.

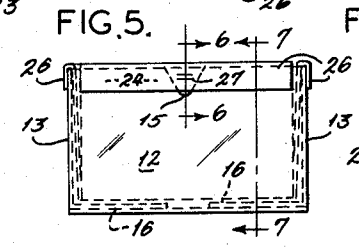

FIG.6.

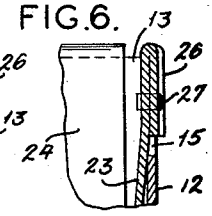

FIG.7.

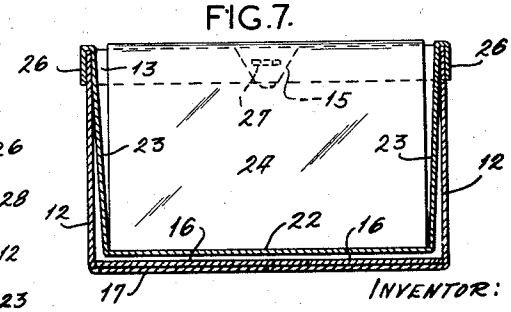

FIG.8.

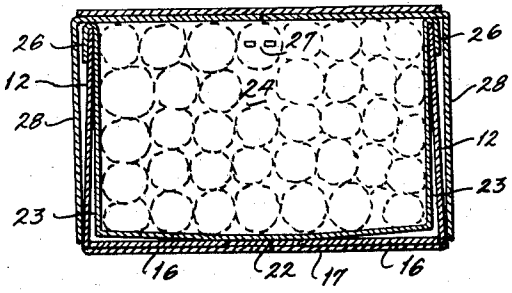

INVENTOR:

WALTER C. GEORGE

BY William Hyl ATTORNEY.

United States Patent Office 2,893,617 Patented July 7, 1959

2,893,617

NON-BULGING FRUIT BOX

Walter C. George, St. Louis, Mo., assignor, by mesne assignments, to Crown Zellerbach Corporation, San Francisco, Calif., a corporation of Nevada

Application October 19, 1955, Serial No. 541,400

2 Claims. (Cl. 229—14)

The invention relates to containers which are substantially proof against side wall outward deflection or bulging, especially when loaded with fresh fruit and hydro-cooled prior to shipment.

Fresh fruit or the like is usually pre-cooled just prior to loading, for example, in railroad cars, by passing packed containers of the fruit through a hydro-cooler. A common cause of failure of containers for this purpose is the weakening of the walls by undue absorption of moisture, resulting in highly objectionable outward deflection or bulging thereof.

The container of a preferred form of the invention is rectangular in shape, comprising inner and outer full telescoping sections with an inner liner. The outer and inner telescoping sections are each closed by flaps attached to the top and bottom edges respectively of the side and end walls. The liner comprises a solid bottom panel of somewhat lesser length and breadth than the bottom panel of the inner body section. Flaps integral with each side and end edge of the liner bottom panel are disconnected from each other and extend upwardly, flaring slightly outwardly, and the upper margins thereof are reversely folded over the top edges of the body section walls at a height which automatically positions the bottom panel of the liner about ½ to ¾" above the bottom panel of the body section.

When the liner is positioned within the inner section as described, it functions, in effect, as a cradle suspended from the upper free edges of the inner section walls in spaced relation from the section walls and bottom panel thereof. When the liner is filled with fruit, the weight thereof, supported solely by the upper free edges of the container, depresses the suspended bottom panel of the liner slightly which deflection simultaneously draws the side panels slightly inwardly so that the liner absorbs substantially all of the outward thrust of the contents. The tendency of the side walls of the container to bulge outwardly, especially when the loaded container is pre-cooled, is effectively eliminated.

When the fruit is to be hydro-cooled before shipment, and the telescoping cover section is constructed of relatively heavy paperboard such as double face corrugated board to provide top load requirements, the invention permits the use of relatively light solid fibreboard in the body section and liner with resulting overall economy of material.

An object of the invention is to provide a container for shipping fresh fruit which may be loaded and passed through a hydro-cooler prior to shipment with substantially no resulting outward deflection or bulging of the side walls thereof.

Another object is to provide a container for packaging, pre-cooling and shipping fresh fruit and the like, comprising an inner body section with a cradle-like liner suspended from the top edges of the walls for containing the contents free from contact with the body bottom panel and walls, enclosed in an outer full telescoping cover section.

Still another object is to provide a shipping container of high stacking strength for fresh fruit comprising an inner section constructed of solid fibreboard with a liner, also of solid fibreboard, suspended from the upper edges of the body walls enclosed in a full telescoping outer section constructed of corrugated paperboard, the walls of the liner being of slightly less height than the walls of the inner section and the bottom panel of the liner being of slightly less length and width than the bottom closure of the body section, whereby all portions of the liner are spaced inwardly from like parts of the body section.

Other objects and advantages of the invention will be readily apparent in the following description and the accompanying drawing in which:

Fig. 1 is a plan view of the blank which forms the inner body section;

Fig. 2 is a perspective view of the assembled inner body section;

Fig. 3 is a plan view of the blank from which the inner liner is assembled;

Fig. 4 is an exploded perspective view of the body section with the fully assembled liner positioned thereabove;

Fig. 5 is a end view of the completely assembled inner body section;

Fig. 6 is a sectional view of the body section shown in Fig. 5 taken in the direction of the arrows **6—6**;

Fig. 7 is a vertical section through the container shown in Fig. 5 taken along the direction of the arrows **7—7**;

Fig. 8 is a vertical section taken along the median line of the fully assembled loaded container.

The blank for forming a preferred form of the body section of the container is indicated at A, Fig. 1. The blank is scored longitudinally at **10** and transversely at **11**, defining end walls **12**, side walls **13** and connecting flap **14**. The upper edge of the end and side walls are notched at substantially their midwidth at **15** for a purpose to be hereinafter described. End wall bottom closure flap **16** and side wall bottom closure flaps **17** are hinged to the respective walls along the horizontal score **10** and are separated from each other by slots **18** extending from the outer edges thereof to the horizontal score **10**. The notches **18** are preferably alternately offset from the planes of transverse scores **11** to facilitate folding of the closure flaps in the course of assembly of the blank.

The blank A is shown fully assembled in Fig. 2 with the connecting flap **14** secured to the remote end wall **12** by staples **19** or other suitable means and bottom closure flaps folded right angularly inward in closed position.

The blank for forming the inner liner of the body section in shown at B, Fig. 3. Longitudinal scores **20** and transverse scores **21** define the bottom panel **22** of the liner and the hinge lines of the liner side walls **23** and end walls **24** respectively. The scores **20** and **21** are positioned to provide the bottom panel **22** of slightly less length and width than the bottom closure of the body section. The outer margin of each of the liner walls is double scored at **25** to define flanges **26** which are reversely folded into parallel spaced relation to the outer face of the liner walls and secured in the described position preferably by a single staple **27** applied approximately midway the length of the flanges **26**. The spaces between the upper margins of the liner walls and the inner faces of the flanges **26** provide channels adapted to receive the upper edges of the body walls. The double scores **25** are spaced from the longitudinal scores **20** and transverse scores **21** a distance somewhat less than the height of the walls **12** and **13** of the body section, thereby suspending the bottom panel of the liner about ½ to ¾ of an inch above body section bottom panel with the liner walls spaced inwardly from the section walls when the liner is inserted therein.

A convenient method of assembling the container is to fold the end walls **12** and side walls **13** about the

transverse scores **11** to form a rectangular tube and attaching the connecting flap **14** to the free side edge of the remote end panel **12** by staples **19**, glue or other suitable means. The end wall bottom closure flaps **16** are folded right angularly inwardly and the side wall bottom closure flaps **17** also folded right angularly inwardly over the folded end wall flaps and the flaps secured together by glue, staples or other suitable means. The fully assembled body blank is shown in perspective in Fig. 2.

The blank B, forming the liner of the body section, may be readily assembled by folding the flanges **26** outwardly and downwardly in parallel relation to the outer face of the liner walls **23** and **24** and securing them preferably by staples **27**. The side walls **23** and end walls **24** are then folded upwardly into position to insert into the body section and will be at an angle slightly greater than 90° with relation to the bottom panel **22** of the liner. The exploded perspective drawing, Fig. 4 shows the preassembled liner preparatory to insertion into its final position within the body section. When the liner is lowered into the body section, the reversely folded flanges **26** automatically telescope the upper outer margin of the side and end walls, the upper free edges of the container walls **12** and **13** seating in the base of the folds of the flanges about the double score **25**. The portions of the flanges **26**, which are tightly secured against the liner walls by the staples **27**, seat in the cutouts **15** in the top edges of the body walls, thus permitting the unsecured portions of the folded flanges, which in effect form pockets, to ride over the top margins of the container of the body walls.

The completely assembled body section with the liner in assembled position therein is shown in Fig. 5 while Fig. 6 illustrates the detail of the flanges **26** and staples **27** through a vertical section of the body section shown in Fig. 5 in the direction of the arrows **6—6**. Fig. 7 illustrates the spacing of the bottom panel **22** of the liner above the bottom closure of the body section and the slightly inwardly and downwardly converging inner walls. The clearance between the inner and outer bottom panels may be varied somewhat depending upon the size of the container, the object being to provide a space for the downward deflection of the liner bottom panel under load as shown in the sectional view of Fig. 8. By this arrangement of parts the weight of the contents of the container is uniformly distributed on the upper edges of the side and end walls of the body section, the inwardly inclined walls of the liner absorbing any outward thrust by the contents, leaving the walls of the body section free of any tendency to outward deflection or bulging.

Upon completion of the loading and pre-cooling of the container and contents, a full telescoping cover section indicated at **28** in Fig. 8, preferably constructed of double face corrugated board, is telescoped over the body section and inner liner loaded with fruit and the container is ready for shipment. Elimination of the outward deflection of the side walls of the body section when the container is loaded facilitates the telescoping of the cover section which otherwise might be quite difficult, if not impossible, to properly position over the body section of pre-cooled loaded containers.

It is to be understood that the embodiment herein described is illustrative and not restrictive, and it is also to be understood that the invention may be susceptible of embodiment in other modified forms, and that all such modifications which are similar or equivalent hereto come equally within the scope of the claims next appearing.

What I claim is:

1. In a container for packaging and shipping a commodity, the container comprising a body section and a unitary liner section nested within the body section, the liner section including a closed bottom and upstanding opposed side walls foldably connected thereto, upper marginal end portions of at least a pair of opposed liner side walls being outwardly and downwardly turned on a fold line into substantial parallelism with the adjacent portion of the side wall and each forming a supporting flange for the liner section, separate fastening means between the ends of each downturned flange and securing a portion of each downturned flange in face engagement with the respective liner side wall, the unsecured portion of each flange being spaced from its side wall and forming pockets therewith, the body section comprising connected together upstanding wall panels integral with a substantially flat bottom, at least a pair of opposed body wall panels having cut-outs in their upper marginal portions forming notches and adjacent edge portions, said adjacent edge portions being received in said pockets, and said face contacting portion of the flange and part of the securing means being received in said notches wherein said liner section is supported on said body section by said flanges and in locked condition with said body walls.

2. The container as defined in and by claim 1 wherein the height of the side walls of the liner from the line of fold to the foldable connection with the bottom, with the said fastening means and portion of the flange in each cut-out, is such to support the bottom of the liner section slightly above the bottom of the body section, and the length of the liner side walls is slightly shorter than the length of the respective body section wall panels.

References Cited in the file of this patent

UNITED STATES PATENTS

829,506	Coleman	Aug. 28, 1906
874,891	Henrich	Dec. 24, 1907
1,152,084	Fenlason	Aug. 31, 1915
1,178,003	Fenlason	Apr. 4, 1916
1,375,722	Ogden	Apr. 26, 1921
1,673,535	Sheehy	June 12, 1928
2,121,667	Kittredge	June 21, 1938
2,143,662	Schwarz	Jan. 10, 1939