US 20060048550A1

(19) United States

(12) Patent Application Publication

(10) Pub. No.: US 2006/0048550 A1

(43) Pub. Date: Mar. 9, 2006

Slutsky

(54) APPARATUS FOR AVOIDING DAMAGE DUE TO WASHING MACHINE HOSE FAILURE

(75) Inventor: **Dennis Slutsky**, Taunton, MA (US)

Correspondence Address:
CONNOLLY BOVE LODGE & HUTZ LLP
SUITE 800
1990 M STREET NW
WASHINGTON, DC 20036-3425 (US)

(73) Assignee: **American Dryer Corporation**, Fall River, MA

(21) Appl. No.: **10/936,739**

(22) Filed: **Sep. 9, 2004**

Publication Classification

(51) **Int. Cl.**
D06F 39/00 (2006.01)

(52) **U.S. Cl.** **68/207**

(57) **ABSTRACT**

First and second solenoid valves are connected respectively to a cold water supply pipe and hot water supply pipe. Washing machines having first and second inlets are connected through the pair of hoses to the solenoid valves on the water supply pipes. The circuit means are connected to the solenoid valves on the water supply pipe and the washing machine internal solenoid valves, so that the valves are operated in synchronism whereby the inlet valves internal to the washing machine are enabled prior to enabling the solenoid valves connected to the water supply pipes. The valve sequence is reversed during a disabled operation, so that the solenoid valves connected to the water supply pipes are closed prior to closing the inlet valves. The operational sequence of the valves reduces the static pressure within the hoses to substantially zero.

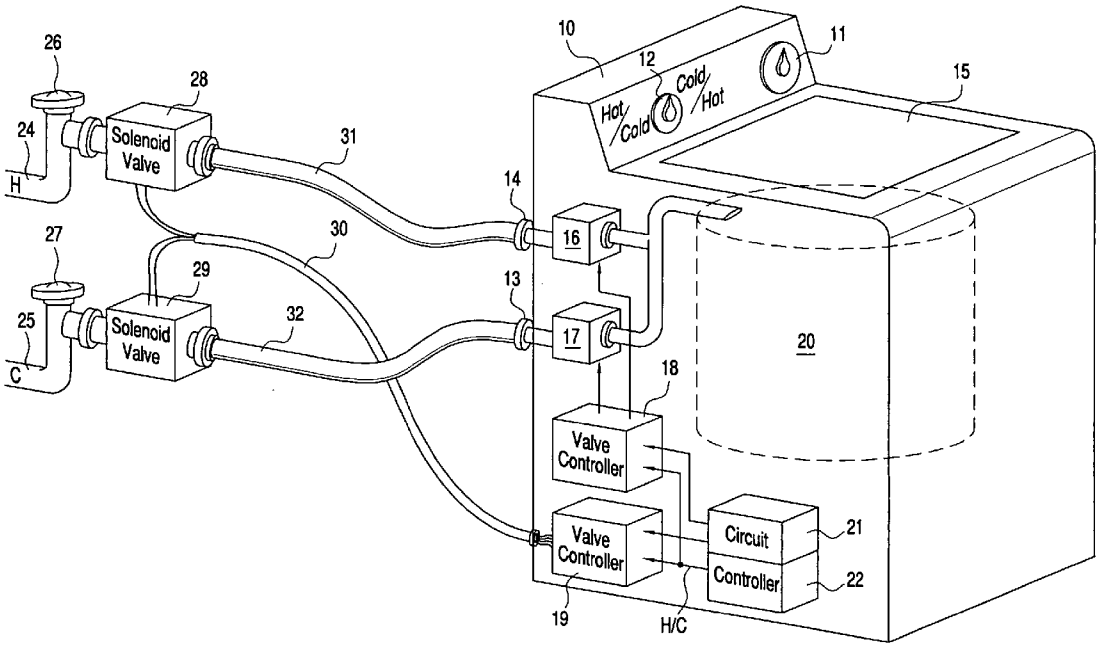

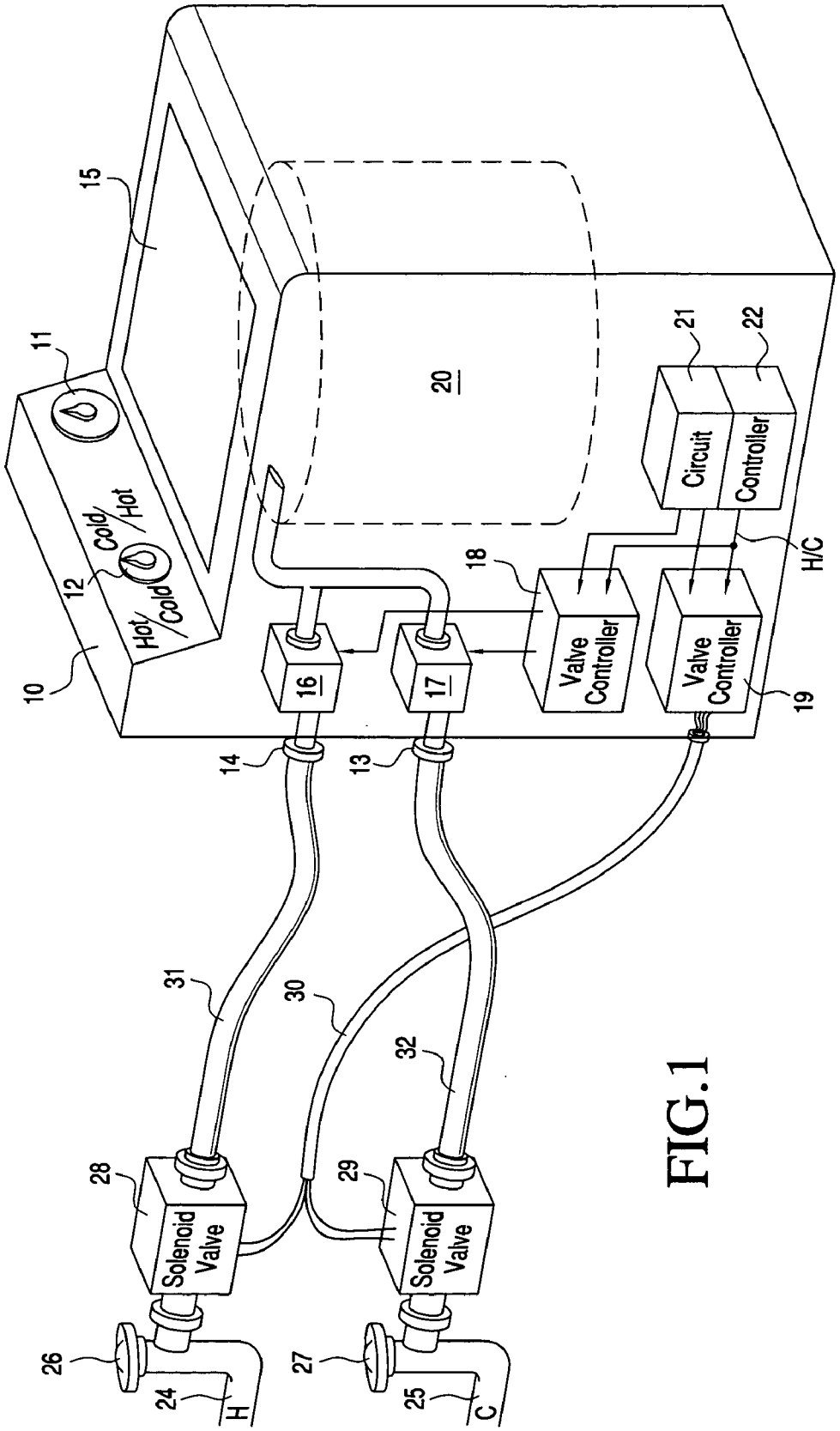
10
11
12
Hot/Cold
Cold/Hot
15
20
21
22
Circuit
Controller
H/C
18
Valve Controller
Valve Controller
19
16
17
14
13
31
30
32
28
29
Solenoid Valve
Solenoid Valve
26
27
24
25
H
C

FIG.1

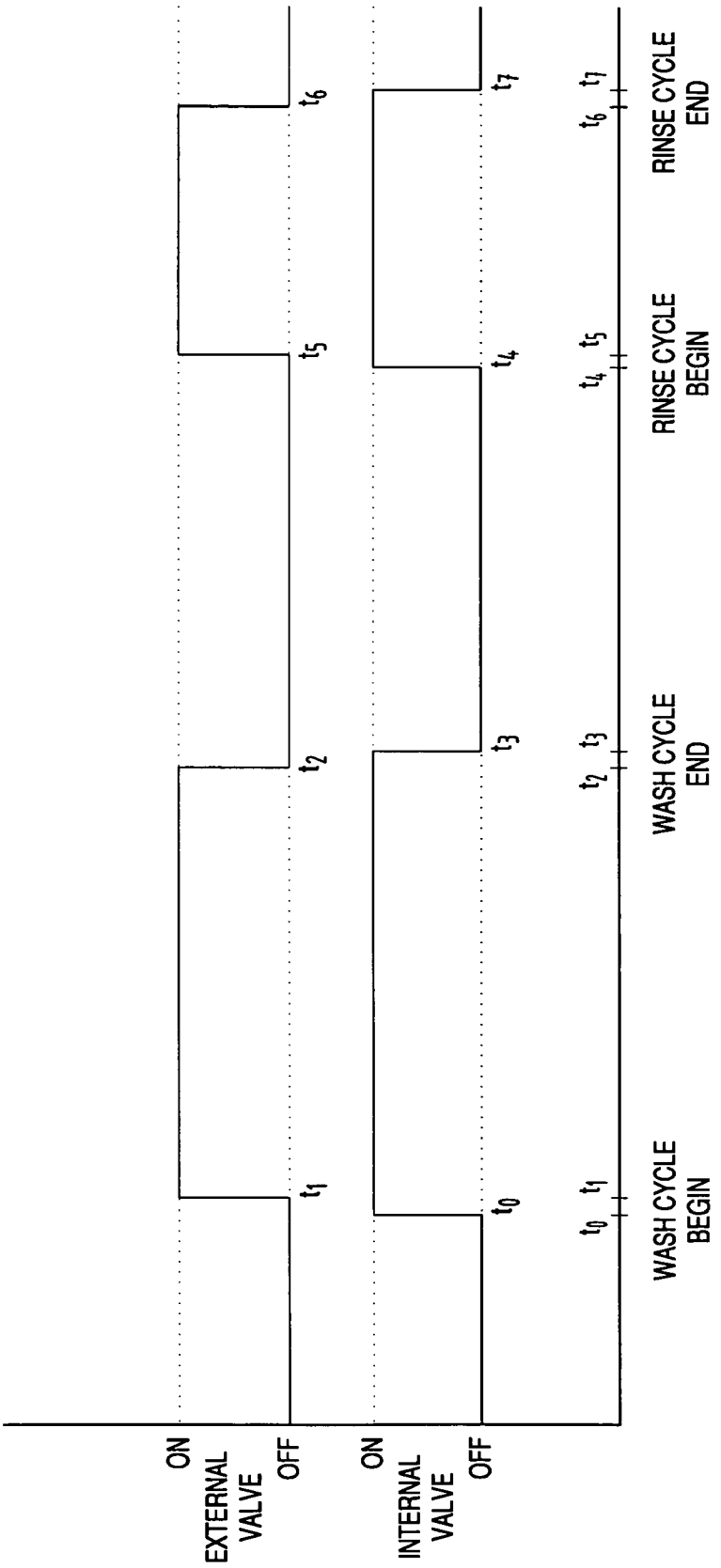
ON
EXTERNAL VALVE
OFF
ON
INTERNAL VALVE
OFF
t_0
t_1
t_2
t_3
t_4
t_5
t_6
t_7
WASH CYCLE BEGIN
WASH CYCLE END
RINSE CYCLE BEGIN
RINSE CYCLE END

FIG.2

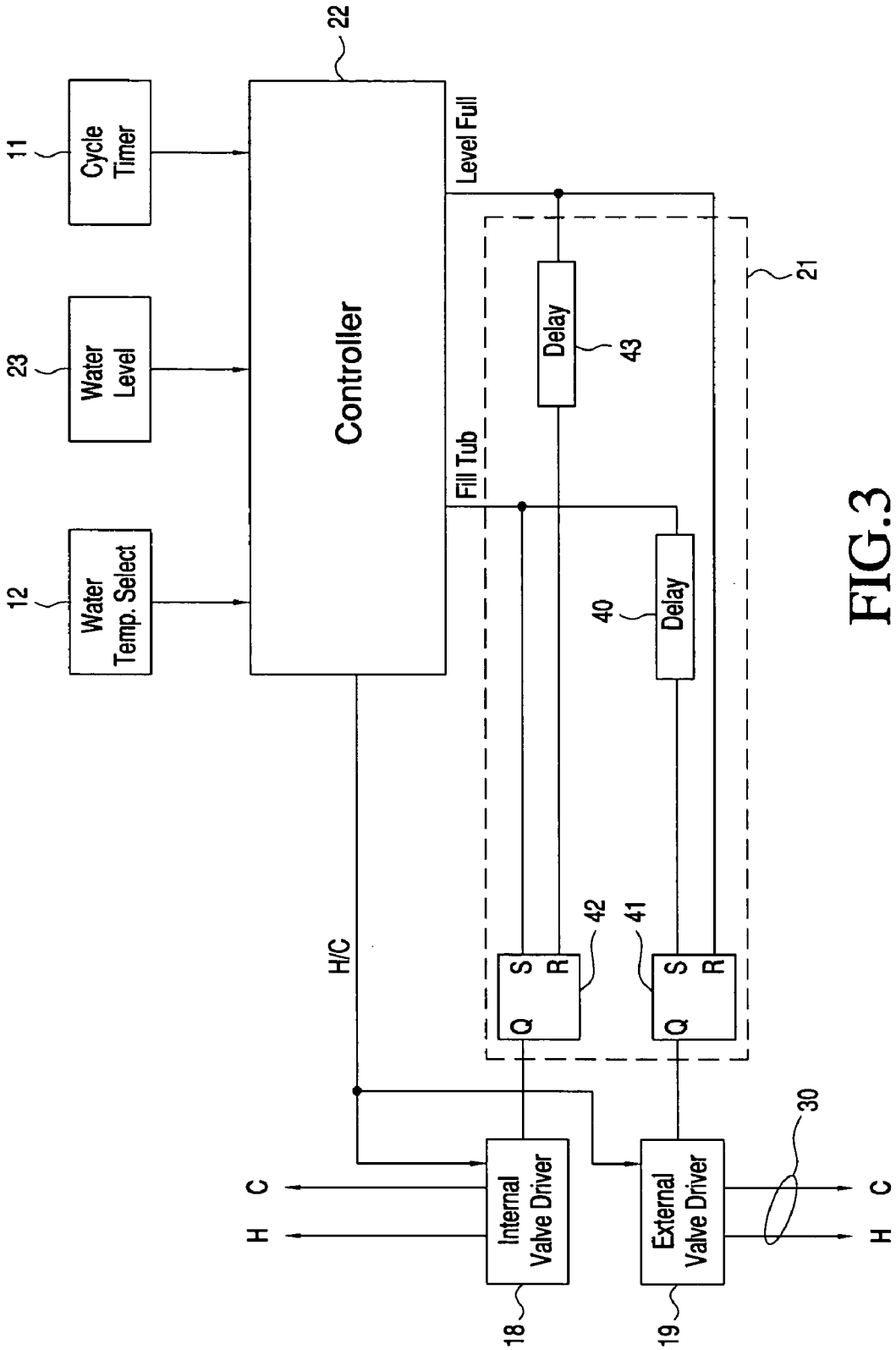
11
Cycle Timer
23
Water Level
12
Water Temp. Select
22
Controller
Level Full
Fill Tub
H/C
21
Delay
43
Delay
40
S
R
Q
42
S
R
Q
41
Internal Valve Driver
18
External Valve Driver
19
30
C
H
C
H

FIG.3

APPARATUS FOR AVOIDING DAMAGE DUE TO WASHING MACHINE HOSE FAILURE

BACKGROUND OF THE INVENTION

[0001] The present invention relates to facilities which use washing machines. Specifically, an apparatus is disclosed which will prevent damage from a washing machine hose failure when left unattended.

[0002] Modern washing machines which are found in both the home and in commercial establishments are connected to hot and cold water supply pipes which supply water to the washing machine tub during washing and rinsing operations. The washing machines have first and second inlets for the hot and cold water, respectively, connected through a pair of flexible hoses to shut-off valves of a cold water and hot water supply system. During operation, the valves are open and the washing machine will fill the wash tub with water which is either cold or hot depending upon the selection made by the user. In most situations, the shut-off valves remain open except during emergencies when they can be closed if leaks occur in the washing machine or flexible hoses.

[0003] The flexible hoses are normally under static pressure when the washing machine is not operating. The water pressure in the flexible hoses may, over time, cause the hoses to burst flooding the laundry facility. If personnel are not available to intercede, the water damage can be very extensive.

[0004] Various systems have been proposed to deal with the problem of hose failure. One such system is disclosed in U.S. Pat. No. 6,427,276. In the foregoing system, a pair of electrically controlled valves are connected to the water supply pipes for interrupting the flow of water when the washing machine is not in use. A wireless interface is employed between the solenoid valves and the washing machine, so that the valves can be appropriately operated.

[0005] The present invention improves upon the foregoing systems of the prior art to further limit the pressure applied to the flexible hoses.

BRIEF SUMMARY OF THE INVENTION

[0006] The present invention provides a safety device to prevent flooding from occurring due to failure of a washing machine hose. A first solenoid valve is connected to a water supply pipe, and the water inlet of a washing machine is connected to the solenoid valve through a hose. The washing machine cycle controller energizes the solenoid valve connected to the water supply pipe as well as a solenoid valve internal to the washing machine which allows water to enter the washing machine wash tub. The enable signals which control each of the solenoid valves is timed so that the first solenoid valve connected to the water supply pipe is enabled after the internal solenoid valve of the washing machine is enabled. Once the tub has filled, the solenoid valve connected to the water supply pipe is closed prior to closing the internal solenoid valve of a washing machine. In this way, static pressure on a hose which is subject to potential failure is always maintained at a minimum, prolonging the life of the hose and avoiding catastrophic flooding of the facility.

BRIEF DESCRIPTION OF THE DRAWINGS

[0007] **FIG. 1** shows a washing machine implemented with a preferred embodiment of the invention;

[0008] **FIG. 2** shows the relative timing of the enable signals to each of the solenoid valves of **FIG. 1**; and

[0009] **FIG. 3** is a more detailed description of the circuits for generating the enable signals of **FIG. 2**.

DESCRIPTION OF THE PREFERRED EMBODIMENT

[0010] **FIG. 1** shows a typical washing machine connection to hot and cold water supply pipes **24** and **25**. Each of the water supply pipes **24** and **25** are equipped with manually operated shut-off valves **26** and **27**. The water connections from each of the shut-off valves **26** and **27** to inlets **13** and **14** of the washing machine include a pair of solenoid valves **28** and **29** directly connected to the shut-off valves **26** and **27** as well as hoses **31** and **32**. Solenoid valves **28** and **29** are in the normally off position, and operated under control of signals supplied through cable **30**. When washing machine **10** enters a wash or rinse cycle, signals through cable **30** will enable one or the other valves depending on the water temperature selection control **12**. A lid **15** gives access to the tub **20** for loading and unloading the washing machine.

[0011] Inlets **13** and **14** are correspondingly connected to solenoid valves **16** and **17**. Each of these solenoid valves which are internal to the washing machine **10** operate under control of the cycle timer **11** as well as from the setting provided by temperature controller **12**. Water from each of the valves **16** and **17** flows into the wash tub **20** of the washing machine.

[0012] The timer **11** establishes the various time intervals that comprise a wash cycle including a wash and rinse portion which fill the tub **20** with water of the selected temperature. A controller **22** connected to the timer **11** generates the appropriate signals operating the various components of the washing machine. A separate circuit **21** generates a timing signal for actuating the external valves **28** and **29** as well as valves **16** and **17** internal to the washing machine. Internal valve driver **18** supplies an on/off signal to internal valve **16** and **17**, based on selected water temperature signal from controller **22** as well as an enable signal from the circuit **21**. A second valve drive circuit **19** is connected through connector **32** and cable **30** to each of the solenoid valves **28** and **29**. The valve driver circuit **19** also receives as an input a water temperature control signal from controller **22** and timing signal from circuit **21**.

[0013] The system of **FIG. 1** is arranged so that there is minimum static pressure maintained on hoses **31** and **32**. When the washing machine is not in use, and the timer **11** is set to its off position, the solenoid valves **28** and **29** are disabled, and remain closed. When the machine is in use, and timer **11** enters a fill/wash portion of the cycle, internal solenoid valves **16** and **17** are energized, permitting water to flow through the valves. After a time Δt following the opening of solenoid valves **16** and **17**, external solenoid valves **28** or **29**, depending on the water temperature selection, are opened and water flows through hose **31** or **32** filling tub **20**.

[0014] At the conclusion of filling tub **20**, circuit **21** disables solenoid valves **28** or **29**, shutting off the flow to hoses **31** and **32**. Subsequently, at a time Δt later, circuit **21** disables the internal solenoid valve **16** or **17**. The net effect

of operating the solenoids in this sequence is to limit the water pressure build up within each of hoses **31** and **32** which may lead to a failure.

[**0015**] **FIG. 2** demonstrates the relative timing for enabling and disabling the internal solenoid valves **16** and **17** and the external solenoid valves **28** and **29**. When the wash cycle begins at T**0**, one of the internal valves is opened to allow water to enter the wash tub **20**. At a later time T**1**, which may be Δt=0.5 seconds later one of the corresponding external valves **28** or **29** are enabled. Pressure within hoses **31** and **32** remains at a very low static value. When the wash tub **20** has filled at time t**2**, circuit **21** will send a signal to the external valve **28**, **29** which is opened, dropping the pressure and flow within the corresponding hose **31** or **32** to essentially 0. The respective internal valve **16** or **17** is then closed at a later time t**3**.

[**0016**] A similar operation occurs during the rinse cycle. At the beginning of the rinse cycle, at time t**4**, one of internal valves **16** or **17** is opened. A short time later Δt, which may be 0.5 seconds, the respective external valve **28** or **29** is opened at t**5** permitting the flow of water through hoses **31** and **32** into the wash tub **20**. When the water level has reached the appropriate level, the external valve **28** or **29** is disabled at time t**6**. After a small Δt time interval, which may also be 0.5 seconds, the internal solenoid valve **16** or **17** is disabled. It is clear from the operation of **FIG. 2**, that the pressure within hoses **31** and **32** remains at a near zero level.

[**0017**] A more detailed explanation of the operation of the valve driver circuits **18**, **19**, circuit **21** and washing machine controller **22** is shown in **FIG. 3**.

[**0018**] Turning now to **FIG. 3**, the controller at **22** generates a fill signal during a wash cycle and rinse cycle to fill the tub **20**. A delay circuit **40**, constituting the amount of time difference between the opening of the internal and external valves, provides a delayed fill signal to the flip-flop **41**. The undelayed fill signal is applied to flip-flop **42**, and opens one of the internal valves by enabling the internal driver circuit **18**. The delayed signal from the flip-flop **41** enables the external valve driver control circuit **19** so that, depending on the value of the H/W water temperature select signal from the controller, signal lines **30** convey an actuating signal to the appropriate external valve **28**, **29**.

[**0019**] The shut-off sequence of **FIG. 2** for each of the sets of valves **16**, **17**, **28**, **29** is initiated by a water level full signal generated by controller **22**. A water level detector **23** generates a water level signal which is detected by controller **22**. When the tub has filled to its capacity, a Level Full signal is produced and delayed in delay circuit **43**. The undelayed signal resets flip-flop **41** sending a disable signal to external valve driver circuit **19** and the external valve **28**, **29** which was opened is then closed. After a time Δt, the respective internal valve **16**, **17** is closed when a delayed reset signal is applied to flip-flop **42**.

[**0020**] Thus there has been described with respect to one embodiment a system for reducing the static pressure on washing machine hoses.

[**0021**] The foregoing description of the invention illustrates and describes the present invention. Additionally, the disclosure shows and describes only the preferred embodiments of the invention in the context of a apparatus for avoiding damage due to washing machine hose failure, but, as mentioned above, it is to be understood that the invention is capable of use in various other combinations, modifications, and environments and is capable of changes or modifications within the scope of the inventive concept as expressed herein, commensurate with the above teachings and/or the skill or knowledge of the relevant art. The embodiments described hereinabove are further intended to explain best modes known of practicing the invention and to enable others skilled in the art to utilize the invention in such, or other, embodiments and with the various modifications required by the particular applications or uses of the invention. Accordingly, the description is not intended to limit the invention to the form or application disclosed herein. Also, it is intended that the appended claims be construed to include alternative embodiments.

What is claimed as new and desired to be protected by Letters Patent of the United States is:

1. A device for preventing flooding from a washing machine hose comprising:

a first solenoid valve connected to a water supply pipe; and

a hose connecting said solenoid valve to a water inlet of said washing machine, said washing machine inlet having an internal solenoid valve connected to receive an enable signal from a wash cycle controller; and

circuit means for providing a second enable signal to said first solenoid valve which is delayed in time from said enable signal to said second solenoid valve.

2. A device according to claim 2, wherein said circuit means enable signals close said first solenoid valve before closing said second solenoid whereby said hose pressure is maintained at substantially zero when said washing machine is not filling with water.

3. A device for preventing a washing machine from flooding comprising:

first and second solenoid valves connected, respectively, to a cold water supply pipe and a hot water supply pipe;

a washing machine having first and second inlets connected through first and second hoses to said first and second solenoid valves, each of said inlets having a solenoid valve operable to fill a wash tub with water from one of said hot and cold water supply pipes, said washing machine having a controller which selects one or more of said washing machine solenoid valves for operation; and

circuit means connected to said controller to provide first and second signals to said first and second solenoid valves to operate said valves in synchronism with said washing machine inlet valves so as to maintain static pressure in the hoses at a minimum.

4. A device according to claim 3, wherein said first and second signals delay the opening of said first and second solenoid valves until a respective inlet valve has been opened.

5. A device according to claim 4, wherein said circuit means closes said first and second solenoid valves before a respective inlet valve closes.

6. A device for preventing flooding from a hose connecting an inlet of a washing machine to a water supply pipe,

said inlet being connected to an internal solenoid valve controlled by said washing machine controller to fill a wash tub, comprising:

an external solenoid valve which connects said hose to said water supply pipe; and

a circuit connected to said controller of said washing machine to receive a fill signal indicating said washing machine is to be filled to capacity with water, and to receive a level full signal indicating said tub has been filled, said circuit providing a first signal to control said internal solenoid valve and providing a second signal to control said external solenoid valve, said circuit enabling said internal solenoid valve to open before said external solenoid valve when a fill signal is received, and closing said external valve before said internal valve when said level full signal is received, thereby maintaining a minimum static pressure in said hose.

7. A device for preventing flooding from a hose connecting an inlet of a washing machine to a water supply pipe, said inlet being connected to an internal solenoid valve controlled by said washing machine controller to fill a wash tub, comprising:

a solenoid valve which connects said hose to said water supply pipe;

a circuit connected to a controller of said washing machine to receive a fill signal indicating said washing machine is to be filled with water, and to receive a level full signal indicating said wash tub has been filled, comprising:

a first delay circuit for delaying said fill signal a period of time;

a second delay circuit for delaying said level full signal a period of time;

a first flip-flop to be set by said fill signal, and reset by a signal from said second delay circuit;

a second flip-flop to be set by a signal from said first delay circuit and reset by said level full signal;

a first valve controller for enabling and disabling an internal solenoid valve connected to said inlet in response to said first flip-flop; and

a second valve controller for enabling and disabling said solenoid valve connecting said hose to said water supply pipe, in response to said second flip-flop.

* * * * *