March 27, 1956

C. B. TRIMBLE

2,740,110

MAGNETIC SWITCHING DEVICES

Filed May 18, 1953

2 Sheets-Sheet 1

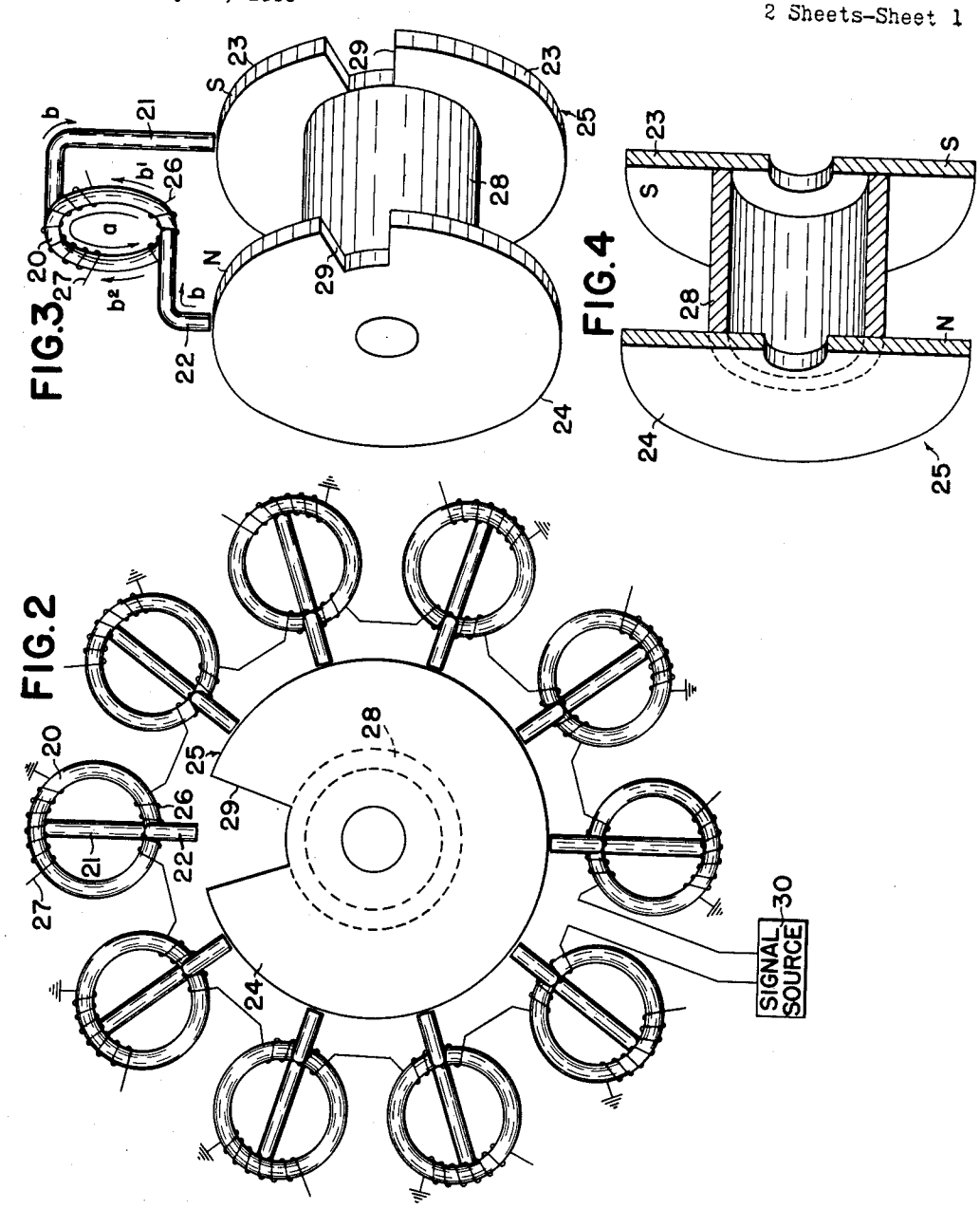

INVENTOR
CEBERN B. TRIMBLE
BY Kane Brust
Louis A. Kline
HIS ATTORNEYS

March 27, 1956 C. B. TRIMBLE 2,740,110

MAGNETIC SWITCHING DEVICES

Filed May 18, 1953 2 Sheets-Sheet 2

FIG. 5

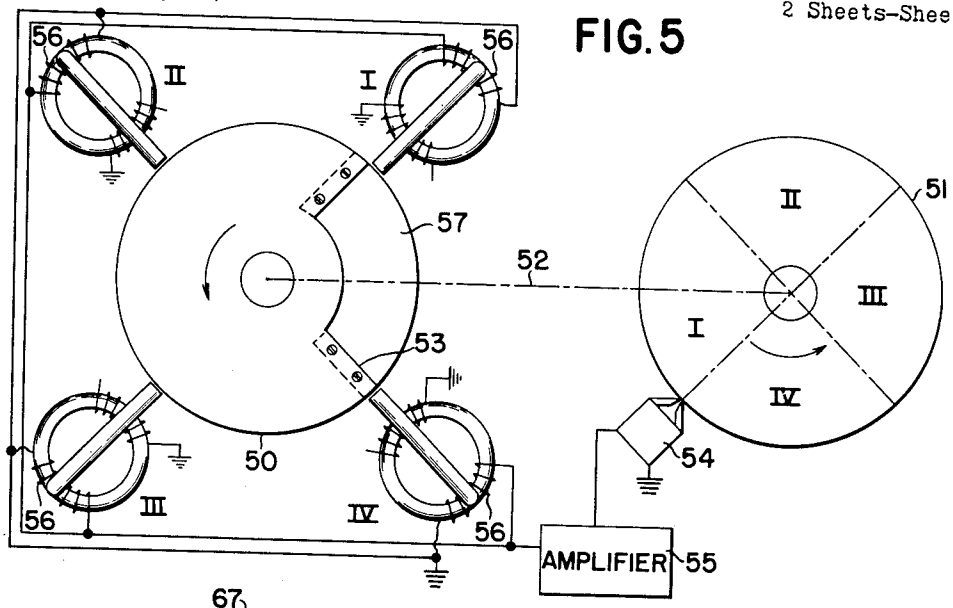

FIG. 6

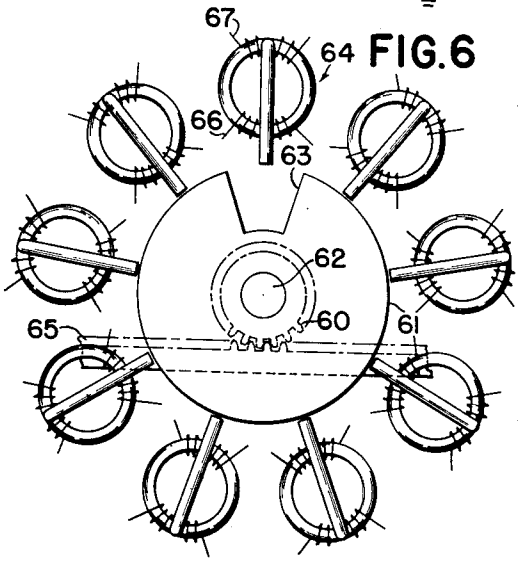

FIG. 8

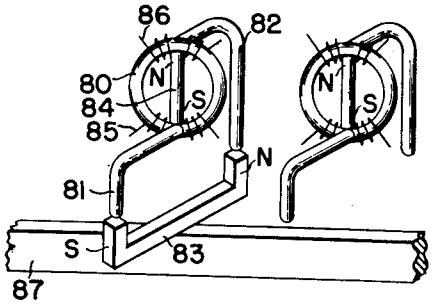

FIG. 7

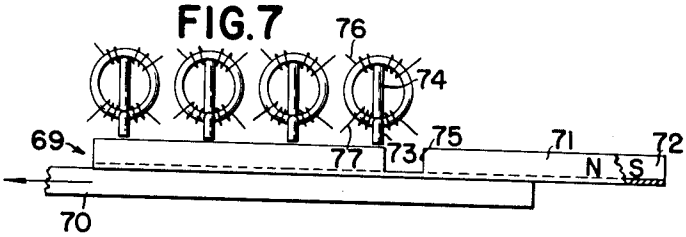

INVENTOR
CEBERN B. TRIMBLE
BY Karl Berst
Louis A. Klein
HIS ATTORNEYS

United States Patent Office

2,740,110

Patented Mar. 27, 1956

1

2,740,110

MAGNETIC SWITCHING DEVICES

Cebern B. Trimble, Dayton, Ohio, assignor to The National Cash Register Company, Dayton, Ohio, a corporation of Maryland

Application May 18, 1953, Serial No. 355,538

21 Claims. (Cl. 340—364)

This invention relates to a magnetic switching or routing device and in particular to a device which uses a selectively-positionable control magnet to control the effectiveness of one or more magnetic switching units to send out an output signal over one or more output paths in response to an input signal applied to the units.

In the past, switching devices, of the type in which a movable wiping contact engages other stationary contacts, have been used to select the output paths over which output signals would be sent, but these switching devices had the drawbacks that there was considerable wear between the moving parts and that it was often difficult to obtain good contact between the wiper and the stationary contacts.

Also, magnetic switching devices have been used in which a control coil is provided for each switching unit to control the saturation of the magnetic circuit and thereby control the effectiveness of input signals to produce output signals, but one of these control coils had to be provided for each unit, and suitable power supplies and controls for selective energization of the coils were required, all of which added to the complexity of the devices. Further, the switching units utilizing control coils to control their effectiveness had the additional disadvantage that unwanted switching transients would appear in the output each time the control coil changed the effectiveness of the switching unit.

The novel magnetic switching or routing device overcomes these defects of the switching devices of the past and enables selective switching to be obtained with a simple apparatus and without undue wear on the apparatus or unwanted switching transient signals.

Briefly, the novel switching device contains one or more stationary magnetic switching units, each of which includes an input coil and an output coil which are coupled by a magnetic circuit to produce an output signal for each input signal and contains a single control magnet which can be moved relatively to the switching units to control the saturation of the magnetic coupling circuits of desired ones of the units to prevent the input signals from being effective to cause output signals from these units. The control magnet, which is moved relatively to the switching units, need not actually engage the several units but can be effective to exert its control across a small air gap; consequently there will be no wear of the parts when the control magnet is moved relatively to the switching units, nor will there be any problem of making proper contact between the moving parts, as in the prior switches using relatively-movable contacts.

The input and output coils for each magnetic switching units are so mounted on the magnetic coupling circuit that magnetism induced in the magnetic circuit by the input signals applied to the input coil will cause corresponding output signals to be generated in the ouput coil, but the effects on the input and output coils due to changes in magnetism induced in the magnetic circuit by the control magnet in rendering the switching unit effective or ineffective will cause no spurious signals to

2

be sent from the input and output coils. Accordingly, unwanted switching transients are eliminated from the novel switching device without necessity for any means or apparatus in addition to that required for the normal operation of the switching device.

It is an object of the invention, therefore, to provide an improved switching or routing device in which wear of parts is minimized and from which switching transients are eliminated.

A further object of the invention is to provide a switching device having one or more magnetic switching units and a positionable magnet external to the units and capable of movement relative to the units to control thier effectiveness to produce output signals in response to input signals applied to the units.

A further object of the invention is to provide a switching or routing device which is capable of very rapid operation and in which switching is effected by selectively controlling the saturation of magnetic circuits of switching units by an external magnet without causing spurious signals as the control is effected.

With these and other, incidental, objects in view, the invention includes certain novel features of construction and arrangement of parts shown in the several embodiments which are hereinafter described with reference to the drawings which accompany and form a part of this specification.

Of the drawings:

Fig. 1 is a view of a switching device showing a single switching unit and a duplex switching unit associated with a control magnet.

Fig. 2 is a view of a switching device showing a plurality of switching units and a control magnet which can be positioned to select which of the switching units will be effective.

Fig. 3 is a perspective view of one of the switching units and the control magnet of Fig. 2.

Fig. 4 is a section through the control magnet of Fig. 3 and shows in particular the construction of this form of magnet.

Fig. 5 is a diagrammatic showing of one application of the novel switch in which signals read from a magnetic storage drum are selectively routed to proper destinations.

Fig. 6 shows a means for setting the switching device of Fig. 2.

Fig. 7 shows a modification of the switching device to provide for controls by a linearly-moved channel-shaped control magnet.

Fig. 8 shows a further modification of the control magnet arrangement for controlling the effectiveness of the switching units.

Detailed description

The switching units will be considered first. The single switching unit, shown at the bottom of Fig. 1 and in Figs. 2 and 3, has a magnetic circuit which includes a torus or ring portion **20** and a pair of connecting portions **21** and **22** extending from diametrically opposite points on the torus to points adjacent two pole pieces **23** and **24** of the control magnet, shown generally at **25**, to enable the control magnet **25** to control the effectiveness of the switching unit. The torus **20** is made of magnetic material having a substantially rectangular hysteresis loop, such as ferrite or material sold under the trade name "Deltamax," and the connecting portions are made of magnetic material having low remanence, such as mu-metal.

An input coil **26** is wound on the torus **20**, with half its turns on either side of the connecting portion **22**, and an output coil **27** is similarly wound on the torus, with half its turns on either side of the connecting por-

tion 21. The torus, which contains no air gaps, provides an extremely efficient magnetic coupling between the input and output coils and enables steep output signals to be obtained in response to input signals. Accordingly, whenever the torus of the switching unit is not saturated by the control magnet, changes in current in the input coil due to input signals wil cause variations in the flux in the coupling torus 20, which in turn will cause output signals to be generated in the output coil. If the torus has been saturated by flux due to the control magnet 25, then changes in current in the input coil 26 due to input signals will have very little effect to change the flux in the torus 20, due to the flux saturation therein, and will not cause any appreciable output signals to be generated.

Any desired number of switching units may be associated with a single control magnet to be controlled thereby.

The form of control magnet 25 shown in Figs. 1 to 6 consists of two pole pieces 23 and 24 connected by a cylindrical permanent magnet 28, which is made of Alnico or other magnetic material capable of producing a strong permanent magnet. The magnet 28 is so arranged with respect to the pole pieces as to provide a strong "north" pole at one pole piece and a strong "south" pole at the other pole piece. The pole pieces, which are disk-shaped, are notched, as at 29, along their periphery, to provide a larger air gap opposite one of the switching units than that provided opposite the others.

The control magnet 25 will be effective on those switching units whose connecting portions 21 and 22 are separated therefrom by small air gaps, to cause sufficient flux in the magnetic circuit including the connecting portions 21 and 22 and the torus 20, to saturate the torus 20 to such a degree that input signals on the input coils 26 cannot produce sufficient change in the flux in the torus to cause output signals to be generated in the output coils, and these switching units will be rendered ineffective.

The switching unit which is opposite the notches 29 in the pole pieces will not have its torus saturated by flux caused by the control magnet because of the large air gaps between the connecting portions 21 and 22 of its magnetic circuit and the notched portions of the pole pieces 23 and 24. Since the torus is not saturated by the control magnet, input impulses applied to the input coil can cause sufficient flux changes in the torus to produce output signals in the output coil, and the switching unit will be effective to switch input signals to the output of this particular unit. Accordingly, the switching units can be rendered effective selectively by simply moving the control magnet to place the notches in the pole pieces opposite the desired unit.

While the pole pieces 23 and 24 have been shown in Figs. 1 to 4 with notches subtending one switching unit, it is obvious that the notches may subtend more than one unit if it is desired to render more than one unit effective for each position of the control magnet. Also, if desired, more than one notch may be provided in the pole pieces to selectively control the effectiveness of the units in different positions of the control magnet.

Preferably, the switching units are mounted in fixed relation in the switching device, and the control magnet is moved relatively thereto, but it is obvious that, as far as the operation of the device is concerned, the control magnet may be made the stationary part of the device, and the switching units can be moved relatively thereto to control their effectiveness.

The manner in which switching transients are eliminated will now be considered. The flux in the torus 20 may be the result of either of two magnetizing forces; namely, the force derived from the input coil 26 when input signals are applied thereto and the force derived from the control magnet 25 when the connecting portions 21 and 22 are not opposite notches 29 in the pole pieces 23 and 24.

When the switching unit has been rendered effective and the flux in the torus 20 is due principally to signals applied to the input coil 26, the total flux will follow the torus in the path indicated at "*a*" in Fig. 3 and will be as though it were derived from a magnet having different polarities at the ends of the input coil. The entire output coil lies in this path, and changes in flux due to current changes in the input coil as input signals are applied thereto will cause corresponding output signals to be generated in the output coil 27.

When the switching unit is rendered ineffective by having the torus saturated with flux by the control magnet, the flux path extends from one of the pole pieces, say 24, over the connecting portion 22 to the torus, as indicated by the arrow "*b*" in Fig. 3; then the path divides, with one half of the flux taking the path over one half the torus, as indicated by the arrow b^1, and the other half of the flux taking the path over the other half of the torus, as indicated by the arrow b^2, and finally the path extends over the other connecting portion 21 to the other pole piece 23. Whenever the status of the switching unit is changed, either from effective condition to ineffective condition or from ineffective condition to effective condition, there will be a change in the amount of flux in this circuit, which change in flux will be effective to generate voltages or signals in the input and output coils. However, as seen most clearly in Fig. 3, the input coil 26 is wound on the torus with half its turns on either side of the control portion 22, so that the flux path enters the center of the coil and extends through the coil in opposite directions, so that changing of flux in the path under control of the control magnet 25 as the effectiveness of the switch is changed will cause substantially equal voltages of opposite polarity to be generated in the two halves of the coil, which voltages will balance out, and there will be no resultant transient signals in the input circuit. Similarly, since the output coil 27 is wound on the torus with half of its turns on either side of the connecting portion 21, substantially equal voltages of opposite polarity will be generated in the two halves of the coil, which voltages will balance out, and no signal will occur in the output circuit as a result of changing the effectiveness of the switching unit.

Therefore, merely by controlling the effectiveness of the switching units by an external magnet and by winding the input and output coils on the torus with half their turns on either side of connections to this magnet, objectionable switching signals can be eliminated without requiring any special bucking coils or additional apparatus.

In Fig. 2, the input coils for the plurality of switching units are connected in series and to a signal source, shown conventionally at 30, which applies input signals to all the units at the same time. Output signals, however, will be available only from that switching unit which is opposite the notched portion of the control magnet 25. The invention is not limited to this form of input, however, because the input coils also may be individually connected to independent signal sources, may be connected in parallel and to a signal source, and may be connected in series-parallel combinations to a signal source, depending on the type of source of input signals which is available or the use to which the switching device is to be put.

The duplex switching unit shown at the top of Fig. 1 operates in substantially the same manner as the single switching unit just described and may be used in place of the single switching unit when two separate outputs in response to two inputs are required in any position of the control magnet.

This type of unit includes a torus 31 with its input coil 32 and output coil 33 and a second torus 34 with its input coil 35 and output coil 36. The same input signals may be applied to both input coils of this switching unit, or different input signals may be applied to the two coils, as desired.

Both tori of the duplex switching unit are connected in a series magnetic circuit between the pole pieces of the control magnet and are rendered effective or ineffective together according to the position of the control magnet. This series magnet circuit extends from the pole piece **24**, over a connecting portion **40**, which engages the torus **31** at a lower point; upward over the two branches of the torus **31**; over the connecting portion **41**, which engages the torus **31** at a point diametrically opposite where portion **40** engages it, and also engages the torus **34**; downward over the two branches of torus **34**; and then over connecting portion **42**, which engages the torus **34** at a lower point diametrically opposite where portion **41** engages it and extends to the pole piece **23**. As in the case with the single switching unit previously described, the tori **31** and **34** will be saturated, rendering the switching unit ineffective when there are short air gaps between the connecting portions **40** and **41** and their related pole pieces **24** and **23**, but the tori will not be saturated and the switching unit will be effective when the notches present large air gaps between these connecting portions and their related pole pieces.

It is to be noted that in the series magnetic circuit the flux path divides in each of the tori in the same manner as in the single switching unit, so that switching transients can be eliminated from the input and output coils by winding half of each coil on opposite sides of the appropriate connecting portions **40**, **41** and **42**.

When the switching unit is effective, signals on each input coil will cause variations in the flux of only its related torus but will not affect the other because of the high reluctance in the series magnetic circuit due to the large air gaps adjacent the control magnet.

While only two tori are shown in the series magnetic circuit of the duplex switching unit of Fig. 1, it is obvious that more tori could be included in series in the magnetic circuit and could be controlled by the control magnet, which tori could be provided with input and output coils to enable further output paths to be obtained. The only requirement to be met in adding further tori would be that the control magnet can saturate all the tori when in position to render them ineffective.

The novel switching device, which is simple in its construction, reliable in operation, and relatively free from wear, is also very versatile in its applications and uses. Several forms of apparatus, showing typical applications or uses of the switching device, are shown in Figs. 5 and 6.

In Fig. 5, the switching device is utilized as a routing device to route information read from predetermined portions of a magnetic data storage drum to different output channels. In the particular apparatus which is shown diagrammatically in Fig. 5, four switching units are used to route information read from four different portions of a magnetic storage drum to four output channels; however, it will be obvious that the number of units and the size of the portions of the storage drum from which data is read can be varied to suit other desired requirements.

In the arrangement of Fig. 5, the control magnet **50** is mounted on the same shaft as the magnetic storage drum **51**, as indicated by the dot-dash line **52**, and is rotated therewith. One quarter of the periphery of each of the pole pieces of the control magnet **50** is recessed, as at **53**, to provide the larger air gaps whereby the four switching units can be rendered effective one after another in sequence, each for one quarter of a revolution of the control magnet.

Signals stored magnetically on the drum **51** will be read by a pick-up head **54** and applied over an amplifier **55** to the input coils **56** of the four switching units I, II, III, and IV in parallel.

It will be clear, from the relative positions of the control magnet **50** and the drum **51** on the shaft, that the recess **53** will be opposite the switching unit I when the quadrant I of the drum is passing the reading head during counter-clockwise movement of the control magnet and drum, and signals read from this quadrant of the drum will be sent out over only the output channel from the switching unit I. As the shaft continues to rotate counter-clockwise, the recess **53** will move opposite switching unit II, rendering the unit effective, and the reading head **54** will read the signals stored in quadrant II of the drum, which signals will be sent out over only the output channel from switching unit II. Similarly, signals read from quadrants III and IV of the drum will be sent out over output channels from switching units III and IV, respectively.

Since the control magnet **50** may be rotated at a relatively high rate of speed, it is desirable that balance plates **57** of non-magnetic material be secured to the control magnet adjacent the recesses **53** to provide dynamic balance to the control magnet.

It can be seen from the above that the novel switching device with its simple control magnet, which has no external control connections and which merely by its position relative to a plurality of switching units and without actually contacting them can control their effectiveness to pass signals, is eminently suited to high-speed dynamic switching for routing signals to desired output channels without any undue wear on the switching device.

In Fig. 6, the switching device is shown as being of the type in which the control magnet is settable to any one of a plurality of control positions to selectively render one of a plurality of switching units effective. The switching device which is shown in Fig. 6 is substantially the same as the one shown in Fig. 2 but has a gear **60**, secured to the control magnet **61**, which is rotatable about a shaft **62** to place the notch **63** opposite the desired switching unit, as **64**, to render it effective. The control magnet **61** can be rotated to any desired position by means of a rack **65**, which meshes with the gear **60** and is given different extents of movement to position the notch **63** opposite the switching unit to be rendered effective. After the switching unit has been selected according to the movement of the rack, input signals on the input coil **66** of the selected unit will cause output signals to be generated in the output coil **67** and sent out over the selected output channel.

As shown in Fig. 6, the entire control magnet **61** can be positioned by the rack **65** and the gear **60** to move both pole pieces together to bring the notches **63** therein opposite one of the switching units to render the entire unit effective. If desired, the control of the switching device of Fig. 6 can be made more flexible to enable the control of the switching units to be effected from two sources. To enable the more flexible control, the pole pieces may be made relatively movable to their magnet and independently adjustable relatively to the switching units. Suitable means can adjust one of the pole pieces to position the notch therein opposite a predetermined one of the switching units according to one of the controls, and other means can adjust the other of the pole pieces to position the notch therein opposite a predetermined one of the switching units according to the other of the controls. Each of the units which had a notch positioned opposite thereto would not, because of the large air gap at the notch, have its torus saturated and would be effective to generate output voltages in response to input signals. In this manner, the effectiveness of the switching units can be controlled from two independent controls exerted on the pole pieces of the control magnet.

A modified form of the novel switching device is shown in Fig. 7. In this embodiment of the invention, a plurality of switching units of the type shown in Figs. 1–6 are used, but the control magnet **69** is in the form of a channel member which is secured to a supporting member **70** and is longitudinally movable therewith relatively to the switching units to control their effectiveness. This control magnet has a base portion and two parallel side portions which forms pole pieces **71** and **72** and present

"north" and "south" poles to the connecting portions **73** and **74** of the switching units to control the saturation of the tori of the units. The pole pieces of the control magnets are notched at **75** to provide large air gaps which, when moved opposite a switching unit, will enable the selected switching unit to generate output signals in its output coil, as **76**, in response to input impulses applied to its input coil, as **77**.

When the control magnet **69** is in the position shown in Fig. 7, all the switching units are ineffective, but, when the magnet is moved to the left by its supporting member **70** to bring the notch **75** opposite one of the switching units, that switching unit will be rendered effective to send out output signals in response to input signals applied thereto.

A further modified form of the invention is shown in Fig. 8. Only two switching units have been shown in this figure, but, as in the case of the other modifications, any desired number of switching units may be provided. The switching units are similar to those of the other modifications, each having a torus **80** of magnetic material and two connecting portions, **81** and **82**, of magnetic material, which extend from diametrically opposite points on the torus to positions adjacent a control magnet **83**. Each switching unit is provided with a permanent magnet **84**, which extends diametrically across the torus between the points from which the control portions **81** and **82** extend and which presents a strong "north" pole at one of these points and a strong "south" pole at the other of these points and normally saturates the torus so that input signals on an input coil **85** on the torus will be ineffective to cause output signals to be generated in an output coil **86** on the torus.

The control magnet **83** is a U-shaped magnet which is mounted on a support **87** for movement relative to the switching units to render them effective selectively. The poles of the control magnet are so oriented that when they are opposite the connecting portions **81** and **82** of a unit they will counteract the effect of the magnet **84** and will prevent the torus from being saturated by the magnet **84**, thereby enabling input signals on the input coil to produce flux variations in the torus to generate output signals in its related output coil.

While in this form of the invention a small permanent magnet, as **84**, is required for each switching unit, this is offset by the fact that a much simpler control magnet, as **83**, can be used to control the effectiveness of the units.

While the forms of mechanisms herein shown and described are admirably adapted to fulfill the objects primarily stated, it is to be understood that it is not intended to confine the invention to the forms or embodiments herein disclosed, for it is susceptible of embodiment in various other forms.

What is claimed is:

1. In a magnetic switching device, the combination of a plurality of switching units, each switching unit including an input coil, an output coil, and a magnetic coupling means between the coils for enabling current changes applied to the input coil to cause flux variations in the magnetic coupling means which in turn cause output voltages to be generated in the output coil; and control means external to the switching units but cooperable therewith for controlling the effectiveness of the switching units by controlling the flux saturation in their magnetic coupling means, said control means including a magnet cooperable with the units and positionable with respect to the units to control whether or not the coupling means will be saturated, said magnet, in each position thereof, enabling the control means to render only a certain one of the switching units effective and the remaining units ineffective, whereby all the units may be controlled simultaneously as to their effectiveness or ineffectiveness merely by the positioning of the magnet relative to the units.

2. In a switching device, the combination of a plurality of magnetic switching units, each unit including an input coil, an output coil, and a magnetic coupling means between the coils to enable input signal current changes in the input coil to cause flux variations in the coupling means which in turn generate output signal voltages in the output coil; and a positionable magnet external to the units for controlling their effectiveness to generate an output signal in response to an input signal, said magnet cooperating with the units and relatively movable thereto to control the flux saturation of their magnetic coupling means, each coupling means, when saturated by the magnet, rendering the switching unit ineffective by preventing flux variations in the coupling means in response to input signals and thereby preventing output signals from being generated in the output coil; and said magnet, in each position thereof, cooperating with all the units and operable to saturate the coupling means of predetermined ones of the units, whereby all the units may be controlled simultaneously as to their effectiveness merely by positioning the external magnet relatively thereto.

3. In a switching device, the combination of a plurality of switching units, each unit including an input coil and an output coil and a magnetic circuit coupling the coils and enabling current changes in input signals on the input coil to cause variations in the flux of the circuit, which variations generate output signals in the output coil; a control magnet common to the plurality of units and selectively cooperable therewith to saturate the magnetic circuits of certain of the units to render them ineffective by preventing input signals from causing further flux changes in these units and thereby preventing output signals from being generated therein; and means for mounting the control magnet for movement relative to the switching units to control which units will be rendered ineffective by having their magnetic circuits saturated by the control magnet.

4. In a magnetic switching device, the combination of a plurality of magnetic switching units and a control magnet external thereto and movable relatively thereto to selectively render the switching units effective, each of said switching units including a torus of magnetic material and connecting portions of magnetic material extending from diametrically opposite points on the torus to points adjacent the control magnet and also including an input coil and an output coil wound on the torus to be coupled magnetically thereby so that flux variations caused in the torus by current variations in the input coil will generate output signals in the output coil; and said control magnet being movable into a position to present a north pole opposite one of said connecting portions of a unit and a south pole opposite the other of said connecting portions of a unit to thereby saturate the torus of the unit to render the switching unit ineffective by preventing current variations in the input coil from causing flux variations in the torus and output signals in the output coil.

5. In a switching device, the combination of a plurality of switching units, each unit including an input coil and an output coil and a magnetic circuit coupling the coils and enabling current changes in input signals on the input coil to cause variations in the flux of the circuit, which variations generate output signals in the output coil; the several output coils forming output channels over which output signals corresponding to input signals applied to all the units may be selectively routed; means to apply input signals to all the input coils; a control magnet common to the plurality of units and selectively cooperable therewith to saturate the magnetic circuits of certain of the units to render them ineffective by preventing input signals from causing further flux changes in these units and thereby preventing output signals from being generated therein; and means for mounting the control magnet for movement relative to the switching units to control over which output channels signals will be sent by controlling which of the units will be rendered ineffective by having their magnetic circuits saturated by the control magnet.

6. In a switching device, the combination of a plurality of switching units, each switching unit including a torus of magnetic material, an input coil wound on the torus, and an output coil wound on the torus, said torus magnetically coupling the input coil and the output coil so that flux variations in the torus caused by current changes applied to the input coil will generate output voltages in the output coil, and also including connecting portions of magnetic material extending from diametrically opposite points on the torus to a control magnet; a control magnet having two pole pieces, one for presenting a north pole to the switching units and one for presenting a south pole to the switching units and each pole piece having a notch, which notches are alined to cooperate simultaneously with the connecting portions of a unit; means for mounting the magnet relatively to the switching units so that one pole piece will cooperate with one connecting portion of each unit and the other pole piece will cooperate with the other connecting portion of each unit, and so that a small air gap will separate the pole pieces from their related connecting portions in all the units except the one opposite the notches in the pole pieces; said control magnet being operable to saturate the tori of the switching units across the small air gaps to render the units ineffective to generate output voltages but being inoperable to saturate the torus of said one unit across the larger air gaps at the notches, thereby enabling said one unit to be effective to generate output voltages; and means to move the control magnet relatively to the units, but without physically contacting the units, to selectively position the notches in the pole pieces adjacent the particular unit which is desired to be effective to generate output voltages.

7. In a switching device, the combination of a plurality of switching units, each unit including a torus of magnetic material, an input coil wound on the torus, an output coil wound on the torus, said torus forming a first magnetic circuit which couples the input and output coils so that flux variations in this circuit caused by current changes in input signals applied to the input coil will generate corresponding output signals in the output coil, and including connecting portions of magnetic material which extend from diametrically opposite portions of said torus, said torus and two connecting portions forming a second magnetic circuit which can be magnetized by a separate magnet to saturate the torus to prevent the input signals from causing variations in the flux in the torus, thereby rendering the switching unit ineffective to pass signals; a separate magnet mounted adjacent the switching units for movement relative to the switching units, and having pole pieces of opposite polarity for cooperating with the connecting portions of the units to control the flux in the second magnetic circuits of the several units, said pole pieces having alined notches which cooperate simultaneously with the connecting portions of a switching unit, and said pole pieces, when separated from the connecting portions of the units by small air gaps, causing sufficient flux in the second magnetic circuits of these units to cause their tori to be saturated, rendering the units ineffective, but, when separated from the connecting portions of a unit by the notches, which form large air gaps, causing no appreciable flux in the second magnetic circuit of that unit and no saturation of the torus, rendering the switching unit effective to generate output signals; and means to position the control magnet relatively to the units to select which unit will be effective, by positioning the notches opposite thereto, whereby the effectiveness of the switching units to generate output signals in response to input signals can be controlled merely by positioning the control magnet relatively to the units without actual contact therewith, so that wear between the moving parts of the switch is eliminated.

8. In a switching device for routing input signals selectively to any desired one of a plurality of output channels, the combination of a plurality of switching units, each unit including a torus of magnetic material, an input coil wound on the torus, and an output coil wound on the torus, said torus forming a first magnetic circuit which couples the input and output coils so that flux variations in this circuit caused by current changes in input signals applied to the input coil will generate corresponding output signals in the output coil, and including connecting portions of magnetic material which extend from diametrically opposite portions of said torus, said torus and two connecting portions forming a second magnetic circuit which can be magnetized by a separate magnet to saturate the torus to prevent the input signals from causing variations in the flux in the torus, thereby rendering the switching unit ineffective to pass signals; the several output coils forming output channels over which output signals corresponding to input signals applied to all the input coils may be selectively routed by controlling the effectiveness of the units; means to apply input signals to the input coils of the units; a separate magnet mounted adjacent the switching units for movement relative to the switching units and having pole pieces of opposite polarity for cooperating with the connecting portions of the units to control the flux in the second magnetic circuits of the several units, said pole pieces having alined notches which cooperate simultaneously with the connecting portions of a switching unit, and said pole pieces, when separated from the connecting portions of the units by small air gaps, causing sufficient flux in the second magnetic circuits of these units to cause their tori to be saturated, rendering the units ineffective, but, when separated from the connecting portions of a unit by the notches, which form large air gaps, causing no appreciable flux in said second magnetic circuit of that unit and no saturation of the torus, rendering the switching unit effective to generate output signals; and means to position the control magnet relatively to the units to select which unit will be effective, by positioning the notches opposite thereto, whereby the routing of output signals over output channels can be controlled merely by positioning the control magnet relatively to the plurality of units to control their effectiveness.

9. In a switching device, the combination of a plurality of switching units, each unit including a torus of magnetic material, an input coil wound on the torus, and an output coil wound on the torus, said torus forming a first magnetic circuit which couples the input and output coils so that flux variations in this circuit caused by current changes in input signals applied to the input coil will generate corresponding output signals in the output coil, and including connecting portions of magnetic material which extend from diametrically opposite portions of said torus, said torus and two connecting portions forming a second magnetic circuit which can be magnetized by a separate magnet to saturate the torus to prevent the input signals from causing variations in the flux in the torus, thereby rendering the switching unit ineffective to pass signals; each of the input coils being wound with half its turns on either side of one of the connecting portions of its related unit and each of the output coils being wound with half its turns on either side of the other of the connecting portions of its related unit; a separate magnet mounted adjacent the switching units for movement relative to the switching units and having pole pieces of opposite polarity for cooperating with the connecting portions of the units to control the flux in the second magnetic circuits of the several units, said pole pieces having alined notches which cooperate simultaneously with the connecting portions of a switching unit, and said pole pieces, when separated from the connecting portions of the units by small air gaps, causing sufficient flux in the second magnetic circuits of these units to cause their tori to be saturated, rendering the units ineffective, but, when separated from the connecting portions of a unit by the notches, which form large air

gaps, causing no appreciable flux in said second magnetic circuit of that unit and no saturation of the torus, rendering the switching unit effective to generate output signals, flux changes in the several units as they are changed from effective to ineffective condition or from ineffective condition to effective condition generating bucking voltages in the halves of the coils on opposite sides of the connecting portions, which voltages cancel out and prevent unwanted switching transients from being sent from the coils; and means to position the control magnet to select which unit will be effective, by positioning the notches opposite thereto, whereby the effectiveness of the switching units to generate output signals in response to input signals can be controlled merely by positioning the control magnet relatively thereto.

10. In a magnetic switching device, the combination of a plurality of switching units, each switching unit including a torus of magnetic material, an input coil wound on the torus, and an output coil wound on the torus, and including a pair of connecting portions of magnetic material extending from diametrically opposite points on the torus and a magnet cooperating with the torus and extending diametrically across the torus with its poles adjacent the points from which the connecting portions extend, said torus magnetically coupling the input coil and the output coil so that flux variations produced in the torus by input signals will cause output signals to be generated in the output coil, and the magnet serving to saturate the torus to normally render the switching unit ineffective by preventing input signals from causing variations in the flux in the torus; and a control magnet external to the units and movable relatively to the units into cooperation with the connecting portions of any one of the units to control the effectiveness of the unit, said control magnet having its poles oriented to buck the poles of the magnets in the units and, when in cooperation with the connecting portions of the selected unit, bucking out the effect of the magnet in that unit and preventing saturation of the torus thereby, rendering that switching unit effective so that input signals can cause variations in the flux in the torus which will generate output signals.

11. In a switching device, the combination of a plurality of switching units, each switching unit including a torus of magnetic material, an input coil wound on the torus, and an output coil wound on the torus, said torus magnetically coupling the input coil and the output coil so that flux variations in the torus caused by current changes applied to the input coil will generate output voltages in the output coil, and also including connecting portions of magnetic material extending from diametrically opposite points on the torus to a control magnet; a control magnet having two pole pieces, one for presenting a north pole to the switching units and one for presenting a south pole to the switching units and each pole piece having a notch; means for mounting the magnet relatively to the switching units so that one pole piece will cooperate with one of the connecting portions of each unit and the other pole piece will cooperate with the other connecting portion of each unit and so that a small air gap will separate the pole pieces from their related connecting portions in all the units except those portions opposite the notches in the pole pieces; said control magnet being operable to saturate the tori of the switching units across the small air gaps to render the units ineffective to generate output voltages but being inoperable to saturate the torus of any unit across the larger air gap at a notch, thereby enabling any such units to be effective to generate output voltages; and means to move the pole pieces to position the notches therein relatively to the units according to controls desired to control the effectiveness of the switching units to generate output signals.

12. In a magnetic switching device, the combination of a switching unit including an input coil, an output coil, and a magnetic coupling means between the coils for enabling current changes applied to the input coil to

cause flux variations in the magnetic coupling means which in turn cause output voltages to be generated in the output coil; and control means external to the switching unit but cooperable therewith for controlling the effectiveness of the switching unit by controlling the flux saturation in the magnetic coupling means, said control means including a magnet positionable with respect to the unit to control whether or not the coupling means will be saturated, said control means, with the magnet in one position, causing no saturation of the coupling means so that current changes in the input coil will be able to cause variation in flux in the coupling means which can cause output voltages to be generated in the output coil and said control means, with the magnet in another position, causing the coupling means to be saturated so that current changes in the input coil will not be able to produce corresponding flux variations in the coupling means and output voltages will not be generated in response to input current changes, whereby the effectiveness of the switching unit can be controlled merely by the position of a magnet relative thereto.

13. In a magnetic switching device, the combination of a switching unit including a torus of magnetic material, an input coil wound on the torus, and an output coil wound on the torus, and including connecting portions of magnetic material extending from diametrically opposite points on the torus to a control magnet, said torus magnetically coupling the input and output coils so that flux variations produced in the torus by input signals will cause output signals to be generated in the output coil; and a control magnet cooperating with the connecting portions to control the flux in the torus, said control magnet causing flux saturation in the torus when the unit is to be rendered ineffective but causing no appreciable amount of flux in the torus when the unit is to be effective.

14. A switching device as claimed in claim 13 in which the input coil is wound on the torus with half its turns on either side of one of the connecting portions and in which the output coil is wound on the torus with half its turns on either side of the other of said connecting portions; whereby signals generated in the two halves of said coils by flux variations, when changing the effectiveness of the unit, cancel out and no unwanted switching signals will be produced in the coils.

15. A switching device as claimed in claim 13 in which the control magnet is a permanent magnet having a north pole and a south pole cooperable with the connecting portions respectively; and in which means is provided to mount the magnet for movement relative to the unit to form small air gaps between the poles and their related connecting portions when the torus is to be saturated by the control magnet to render the unit ineffective and to form large air gaps between the poles and their related connecting portions when the torus is not to be saturated by the control magnet and the switching unit is to be effective.

16. In a switching device, the combination of a switching unit including a torus of magnetic material, an input coil wound on the torus, and an output coil wound on the torus, said torus forming a first magnetic circuit which couples the input and output coils so that flux variations in this circuit caused by current changes in input signals applied to the input coil will generate corresponding output signals in the output coil, and said switching unit including connecting portions of magnetic material which extend from diametrically opposite portions of said torus, said torus and two connecting portions forming a second magnetic circuit which can be magnetized by a control magnet to saturate the torus to prevent the input signals from causing variations in the flux in the torus, thereby rendering the switching unit ineffective to generate output signals in response to input signals; and a control magnet cooperating with the connecting portions and operable to control the amount of

flux in the second magnetic circuit to control the effectiveness of the switching unit, said control magnet causing sufficient flux in the second magnetic circuit to saturate the torus of the unit when the unit is to be ineffective but causing no appreciable amount of flux in the second magnetic circuit and no saturation of the torus when the unit is to be effective.

17. In a switching device, the combination of a switching unit including a torus of magnetic material, an input coil wound on the torus, and an output coil wound on the torus, said torus forming a first magnetic circuit which couples the input and output coils so that flux variations in this circuit caused by current changes in input signals applied to the input coil will generate corresponding output signals in the output coil, and said switching unit including connecting portions of magnetic material which extend from diametrically opposite portions of said torus, said torus and two connecting portions forming a second magnetic circuit which can be magnetized by a separate magnet to saturate the torus to prevent the input signals from causing variations in the flux in the torus, thereby rendering the switching unit ineffective to generate output signals in response to input signals; and a separate magnet movable relatively to the switching unit and having pole pieces of opposite polarity for cooperating with the connecting portions to control the amount of flux in the second magnetic circuit, said pole pieces, when moved adjacent the connecting portions and separated therefrom by small air gaps, causing sufficient flux in the second magnetic circuit to cause the torus to be saturated, rendering the unit ineffective, but, when moved to be separated from the connecting portions by large air gaps, causing no appreciable flux in said second magnetic circuit and no saturation of the torus, rendering the switching unit effective to generate output signals; whereby the effectiveness of the switching unit to generate output signals in response to input signals can be controlled merely by positioning the control magnet relatively thereto.

18. In a switching device, the combination of a switching unit including a torus of magnetic material and two connecting portions of magnetic material extending from diametrically opposite points on the torus and including an input coil wound on the torus with half its turns on either side of one of the connecting portions, and an output coil wound on the torus with half its turns on either side of the other connecting portion, said torus forming a first magnetic circuit which couples the input and output coils of the unit so that flux variations in this magnetic circuit caused by current changes in input signals applied to the input coil will generate corresponding output signals in the output coil of the unit, and the torus and the connecting portions of the unit forming a second magnetic circuit which can be magnetized by a control magnet to saturate the torus to prevent input signals from causing variations in the flux in the torus, thereby rendering the switching unit ineffective to generate output signals; and a control magnet cooperating with the connecting portions of the second magnetic circuit to control the flux therein to saturate the torus when the unit is to be ineffective and to leave the torus unsaturated when the unit is to be effective, flux changes in the second magnetic circuit, as the status of the unit is changed, generating bucking voltages in the halves of the coils on opposite sides of the connecting portions, which voltages cancel out and prevent unwanted switching transients from being sent from the coils.

19. In a switching device, the combination of a duplex switching unit including two tori of magnetic material, an input coil wound on each torus, and an output coil wound on each torus, each of said tori forming a coupling magnetic circuit which couples its related input and output coils so that flux variations in the coupling circuit caused by current changes in input signals applied to the input coil will generate corresponding output signals in the output coil, and each switching unit also including a first connecting portion of magnetic material connecting the tori together and a further connecting portion extending from each torus to a point opposite a control magnet, which portions which connect the tori together and also which extend to the control magnet extending from diametrically opposite portions of said tori, said two tori and three connecting portions forming a controlling magnetic circuit in the unit which can be magnetized by the control magnet to saturate the two tori to prevent the input signals on either input coil from causing variations in the flux in its related torus, thereby rendering the switching unit ineffective to generate output signals in response to input signals; and a control magnet cooperating with said further connecting portions and operable to control the amount of the flux in the controlling magnetic circuit of the unit to control the effectiveness of the switch unit, said control magnet causing sufficient flux in the controlling magnetic circuit of a unit to saturate the two tori of the unit when the unit is to be effective but causing no appreciable amount of flux in the controlling magnetic circuit of a unit and no saturation of the two tori when the unit is to be effective, said controlling magnetic circuit enabling the control of two separate outputs from two separate inputs to be obtained from a single control magnet.

20. In a switching device, the combination of a duplex switching unit including two tori of magnetic material, an input coil wound on each torus, and an output coil wound on each torus, each of said tori forming a coupling magnetic circuit which couples its related input and output coils so that flux variations in the coupling circuit caused by current changes in input signals applied to the input coil will generate corresponding output signals in the output coil, and each switching unit also including a first connecting portion of magnetic material connecting the tori together and a further connecting portion extending from each torus to a point opposite a control magnet which portions which connect the tori together and also which extend to the control magnet extending from diametrically opposite portions of said tori, said two tori and three connecting portions forming a controlling magnetic circuit in the unit which can be magnetized by the control magnet to saturate the two tori to prevent the input signals on either input coil from causing variations in the flux in its related torus, thereby rendering the switching unit ineffective to generate output signals in response to input signals; a permanent magnet external to the unit and cooperating with said further connecting portions to control the amount of the flux in the controlling magnetic circuit of the unit and thereby to control the effectiveness of the switch unit; and means for mounting the magnet for movement relative to the connecting portions to form small air gaps in one position of the magnet to enable said control magnet to cause sufficient flux in the controlling magnetic circuit of a unit to saturate the two tori of the unit when the unit is to be effective and to form large air gaps in another position of the magnet to prevent the magnet from causing any appreciable amount of flux in the controlling magnetic circuit of a unit and no saturation of the two tori when the unit is to be effective, said controlling magnetic circuit enabling the control of two separate outputs from two separate inputs merely by the positioning of a single control magnet relatively to the unit.

21. In a magnetic switching device, the combination of a switching unit including a torus of magnetic material, an input coil wound on the torus, and an output coil wound on the torus, and including a pair of connecting portions of magnetic material extending from diametrically opposite points on the torus and a magnet cooperating with the torus and extending diametrically across the torus with its poles adjacent the points from which the connecting portions extend, said torus magnetically coupling the input coil and the output coil so that flux variations produced in the torus by input signals will cause output signals to be generated in the output coil, and the

magnet serving to saturate the torus to normally render the switching unit ineffective by preventing input signals from causing variations in the flux in the torus; and a control magnet external to the units and movable into cooperation with the connecting portions to control the effectiveness of the unit, said control magnet having its poles oriented to buck the poles of the magnet in the unit and, when in cooperation with the connecting portions, bucking out the effect of the magnet in the unit and preventing saturation of the torus thereby, rendering the unit effective so that input signals can cause variations in the flux in the torus which will generate output signals.

References Cited in the file of this patent

UNITED STATES PATENTS

2,021,099	Fitzgerald	Nov. 12, 1935
2,342,637	Bechberger	Feb. 29, 1944
2,427,213	Jewell	Sept. 9, 1947