Jan. 28, 1947. B. OFFEN 2,414,891

MEANS FOR DRYING WEBS

Filed Feb. 19, 1944 4 Sheets-Sheet 1

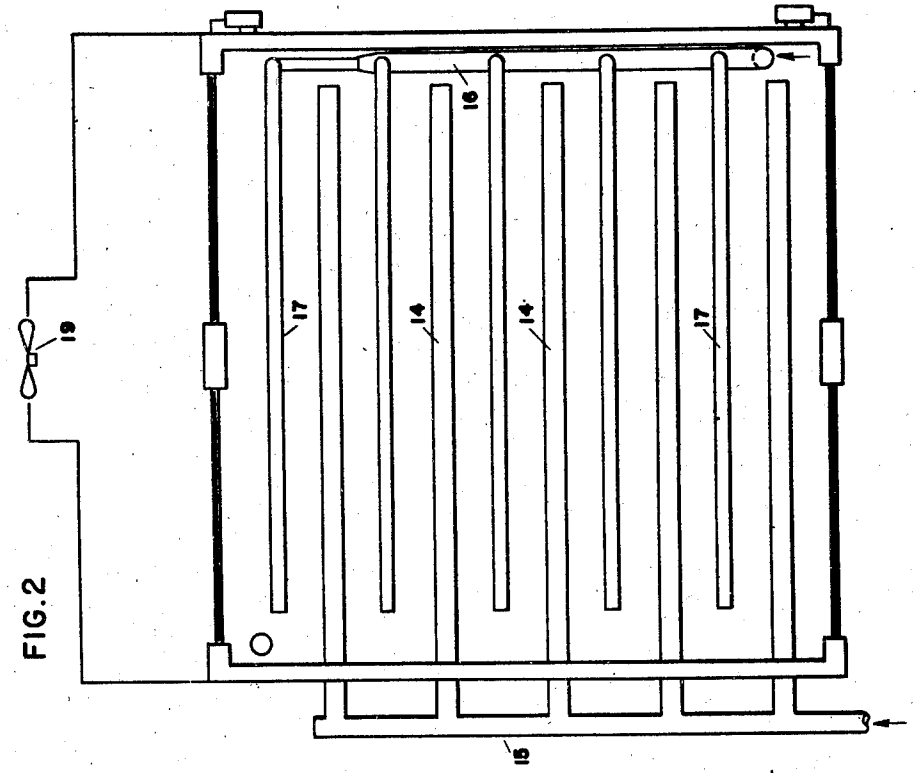

FIG. 2

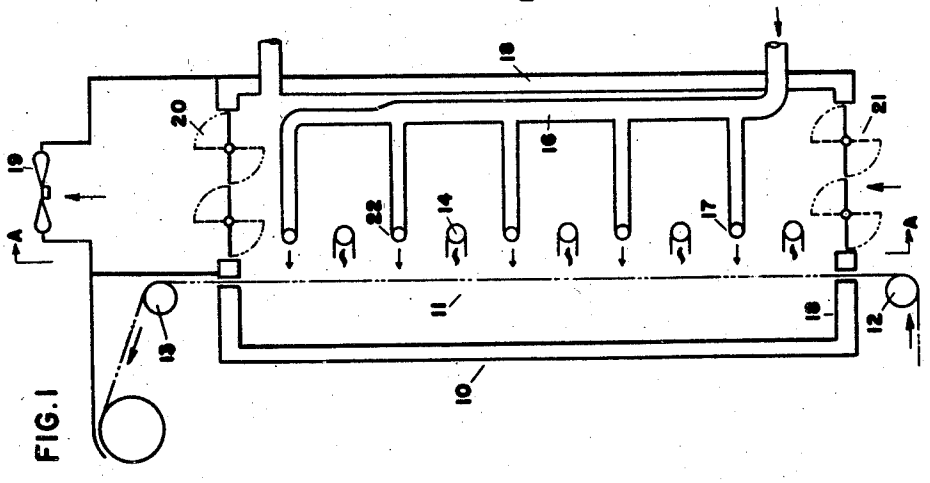

FIG. 1

INVENTOR.

BY Bernard Offen

Herman Seid

Jan. 28, 1947. B. OFFEN 2,414,891

MEANS FOR DRYING WEBS

Filed Feb. 19, 1944 4 Sheets-Sheet 2

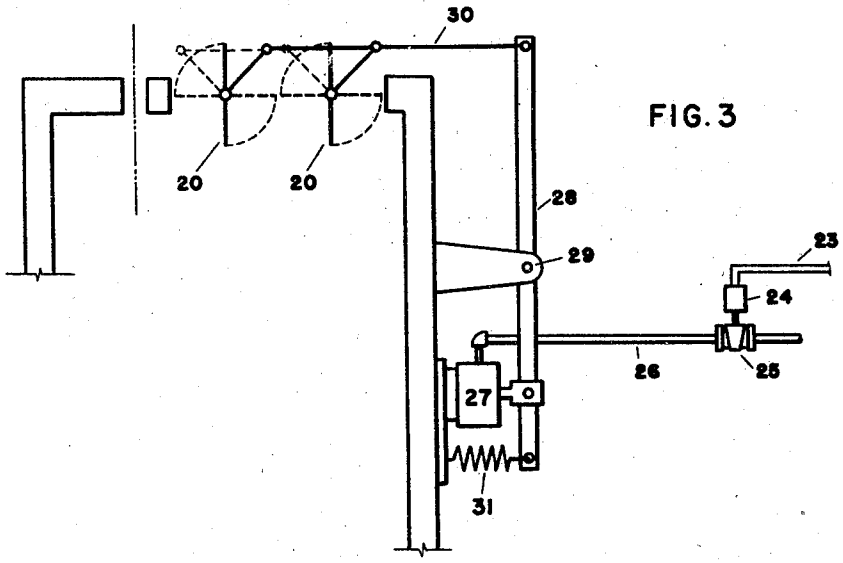

FIG. 3

FIG. 4

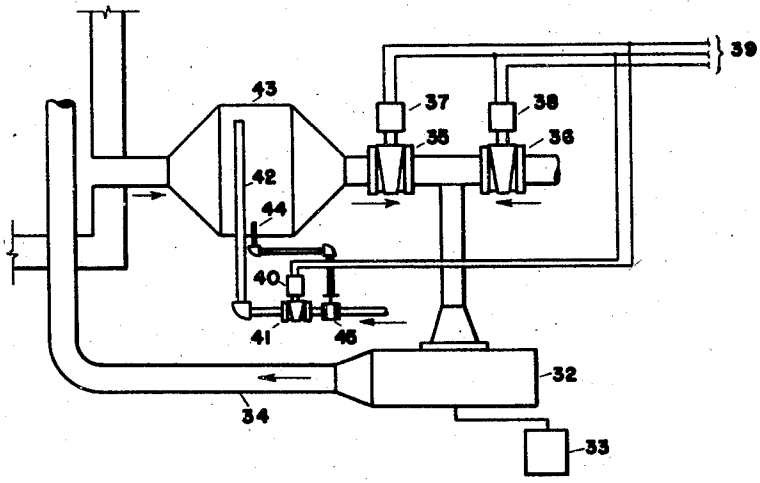

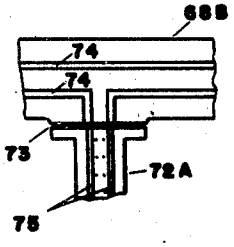

FIG. 10

INVENTOR.

BY Bernard Offen

Herman Reid

Jan. 28, 1947. B. OFFEN 2,414,891

MEANS FOR DRYING WEBS

Filed Feb. 19, 1944 4 Sheets-Sheet 3

FIG. 5

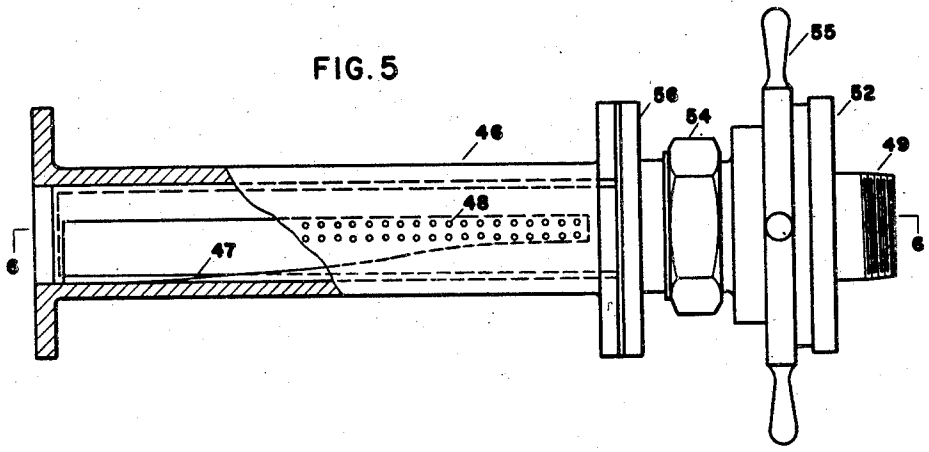

FIG. 6

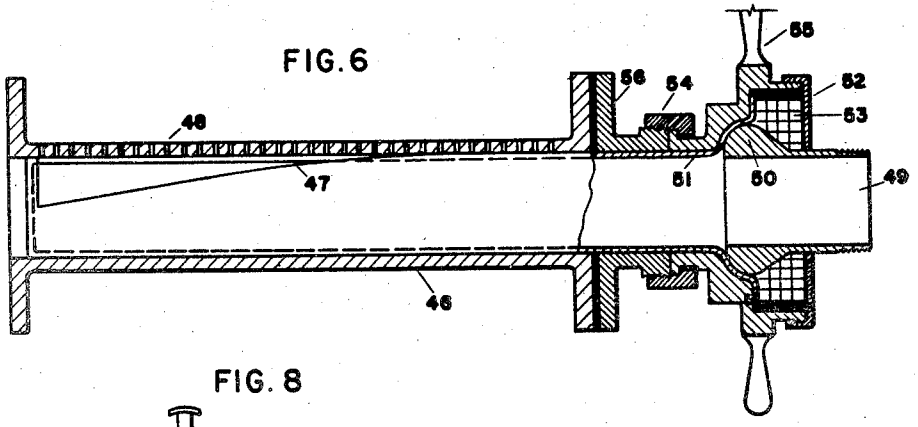

FIG. 8

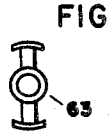

FIG. 7

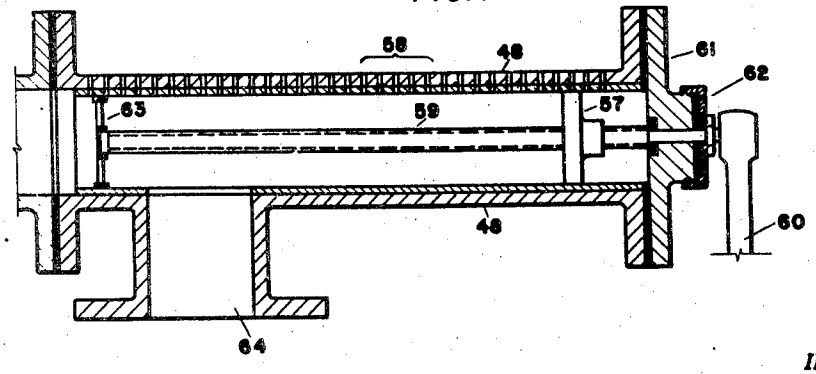

INVENTOR.

BY Bernard Offen

Herman Reid

Jan. 28, 1947. B. OFFEN 2,414,891

MEANS FOR DRYING WEBS

Filed Feb. 19, 1944 4 Sheets-Sheet 4

FIG.9

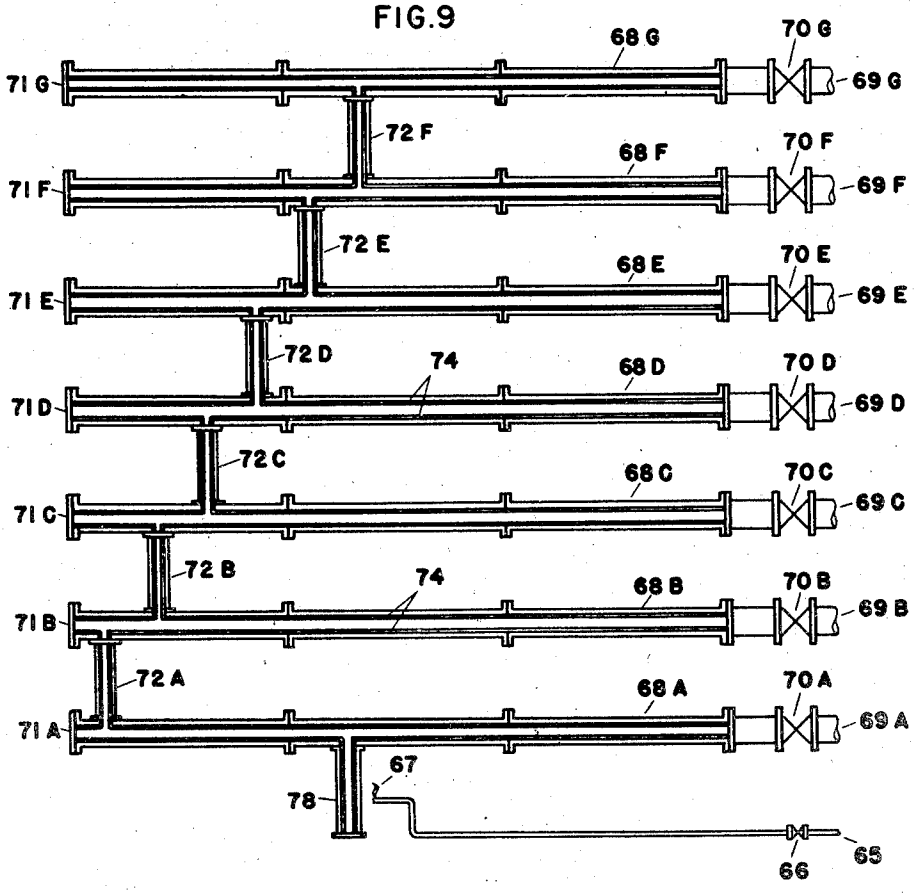

FIG.11

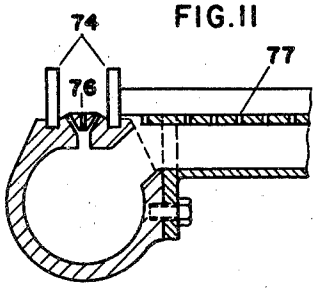

FIG.12

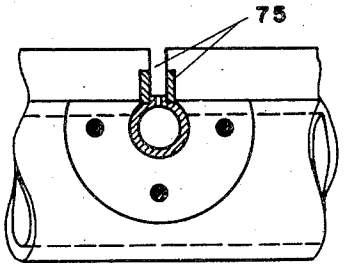

INVENTOR.

BY Bernard Offen

Herman Reid

Patented Jan. 28, 1947 2,414,891

UNITED STATES PATENT OFFICE

2,414,891

MEANS FOR DRYING WEBS

Bernard Offen, Chicago, Ill.

Application February 19, 1944, Serial No. 523,073

6 Claims. (Cl. 263—3)

1

This invention relates more particularly to letter press drying methods and an improved system for assuring safe and rapid drying of printed webs subjected to ribbon burners or similar flame drying means.

A principal object of the invention is to provide a drying arrangement, adapted for use in a drying hood through which a web is routed, wherein the space requirements for housing effective drying equipment are reduced to a practical minimum.

Another object of the invention is to provide for speedy drying of a printed web by impinging a plurality of relatively small streams of compressed air against the surface to be dried. The air at relatively high pressure not only assures effective drying action, but also serves continuously to prevent the formation of a film of vapor which normally forms adjacent and has a tendency to cling to and travel along with the web.

A further object of the invention is to provide for delivering compressed air at relatively high velocity and at a predetermined relatively high temperature. The heated compressed air promotes speedy evaporation of the volatile fluids on the web as well as effective dissipation and agitation of the resultant vapors formed.

Another object of the invention is to govern the temperature within a dryer hood so that a maximum heated condition is maintained while a web travels therethrough, and a relatively cool condition produced when the web travel is interrupted.

A feature of the invention resides in the provision of a burner arrangement for producing ribbons of flame of desired width, depending on the width of the web passing through the hood. This results in concentration of the heating action for optimum drying at minimum operating cost. While applicant has used burners divided up into a plurality of sections so that one or more of them could be cut in and out of service, closer adjustment is desirable so that regardless of variations in width of webs, only that flame will be provided necessary for effective drying.

In connection with the use of a plurality of burners for providing flame action over a desired area, applicant provides a novel pilot arrangement for cutting in and out of operation such burners in sequence or simultaneously, and in coordination with the operation of a press from which a web is fed, as may be desired for efficient web drying.

A feature of such pilot arrangement resides in

2

the positioning of secondary pilots between main burners, such pilots consisting of tubes, with gas escape ports therein, connecting adjacent burners, each tube containing a barrier in the form of a flange to bar the flow of gas between burners. However, the combustion in one burner serves to ignite the gas flowing thru the gas escape ports in the secondary pilot, connected thereto with the result that when gas is permitted to flow to the adjacent burner, the gas on the other side of the barrier of the pilot will become ignited to cause combustion in the adjacent burner.

A further feature covers the interpositioning of a plurality of burners and compressed air conduits within a dryer hood structure in combination with a supply and control arrangement for governing the delivery of gas and compressed air in interrelated action designed to effect speedy drying at low cost and with ease of operation.

Another feature covers the provision of a damper arrangement, whose operation is automatically correlated with the operation of a press feeding a printed web to a dryer hood so that dampers for assuring a cooler temperature within the hood will be opened while the press is inoperative and closed when the press is running and high temperatures desired within the hood.

These and other features will be more apparent from the following description of a typical embodiment of the invention to be read in connection with the accompanying illustrative drawings in which:

Fig. 1 is a diagrammatic arrangement of a vertical dryer arrangement for carrying out applicant's invention;

Fig. 2 is a sectional view on the lines A—A of Fig. 1;

Fig. 3 is a detail of a damper arrangement for opening and closing the dampers of the dryer hood shown in Fig. 1 responsive to operation of a press feeding a web to the hood;

Fig. 4 is a detail of a compressed air supply arrangement serving a series of compressed air delivery conduits in the dryer hood;

Fig. 5 is a top view of a gas burner adapted to provide a flame of varying width in the dryer hood to accommodate webs of different width.

Fig. 6 is a section on the lines 6—6 of Fig. 5;

Fig. 7 shows another form of burner arrangement for providing a flame of varying width;

Fig. 8 is a detail of the piston rod support used in the burner arrangement of Fig. 7;

Fig. 9 is a diagrammatic representation of ap-

plicant's primary and secondary pilot arrangement;

Fig. 10 is a detail of the secondary pilot; and

Figs. 11 and 12 show a section and side view respectively of a secondary pilot connected to a burner.

Considering the drawings, similar designations referring to similar parts, numeral 10 generally designates an enclosure such as a dryer hood through which a web 11 is routed to be dried. While the dryer of Figs. 1 and 2 is shown in vertical arrangement, the invention may be applied to horizontal dryer hoods or to dryer hoods installed in angular position. The web, as from a letter press, passes over a supporting roller 12, then through the hood where it is subjected to drying action, then over supporting roller 13 for disposition, as desired.

It has been customary in connection with letter press dryer hoods heretofore employed, as shown, for example, in applicant's Patent No. 2,152,770, to provide a series of supply and return ducts for the circulation of air over the web. The use of such duct arrangements imposes limitations upon the arrangement of burners employed for providing concentration of heat over the web as it passes through the hood for effective drying. Applicant eliminates the conventional supply and return duct arrangement heretofore employed by him and, also, removes to an appreciable degree the limitations with respect to positioning and close stacking of burners for concentrating flame action upon the web. As a result, the web may be run through the hood at higher speeds and subjected to higher temperatures. Such operation, however, would increase the hazard of fire and burning of the web, as takes place when the press stops; but applicant effectively eliminates such danger by providing for speedy cooling of the interior of the hood immediately upon a halt in the travel of the web. The elimination of such clinging gaseous film as has a tendency to form on the web as it travels at high speed is also effected, so that active drying is at all times carried on and penetration assured to the web surface.

A series of burners 14 is positiond within the hood arranged to throw flames of desired character directly against the side to be dried of web 11. The burners may be closely spaced together and are fed from a suitable source of gas supply through a header 15 employed for mounting the burners. Also located within the hood is a header 16 supplying compressed air from a suitable source hereinafter described, to a series of compressed air conduits 17 having nozzles 22 positioned to direct small streams of heated compressed air against the side to be dried of web 11. It will be understood that the representation of nozzles 22 is diagrammatic, as is that of gas burners 14 and compressed air conduits 17, but the nozzles, in the form of slits or jets as desired are arranged to discharge impinging streams at a pressure and with a velocity adequate to provide an impact force causing agitation and turbulence over the whole area of the web passing through the hood.

The hood is provided with sides 18 including entrance and leaving ends through which the web passes into and out of the hood. An exhaust fan 19 to one side of the hood in combination with dampers 20, 21 provide active circulation of outside air for clearing and cooling the hood as will now be described in connection with the showing of Fig. 3.

When the press, from which web 11 is fed, is in

operation, wires 23 which lead to the press controller, not shown since it forms no part of this invention, will close a circuit to energize solenoid valve 24 to open compressed air inlet valve 25. The compressed air from a suitable source at 15 pounds or other suitable pressure, will thereupon be admitted through line 26 to damper operating bellows 27, causing the bellows to expand, and through lever 28, pivoted at fulcrum 29 and through operating rod 30, effects the closing of dampers 20, 21. While Fig. 3 is shown only in connection with dampers 20 at one end of the hood, it will be understood that the dampers 21 at the other end may similarly be controlled. When the press stops, thus bringing the web to a halt, the circuit to the press controller is broken, whereupon solenoid valve 24 is deenergized, the compressed air consequently shut off from the bellows which contracts. The action of spring 31 assures quick opening of the dampers 20, 21. The fan 19 may be manually or automatically controlled so that immediately upon stopping of the web and opening of the dampers, the fan will simultaneously cause an active circulation of air through the hood, much ccoler than the high temperature in the hood, to prevent burning of the stationary web due to concentration of heat from the burners. As was set forth in applicant's copending application Serial No. 485,998, filed May 7, 1943, the gas supply to the burners may immediately be shut off when the web for any reason stops and may be adjusted to provide flames of desired intensity depending on the speed of travel of the web through the hood. Thus application assures operation with maximum safety despite the use of direct flame upon the web for providing intensive drying at high web speeds.

In Fig. 4, showing the compressed air supply arrangement, air compressor or blower 32, operated by motor 33, supplies air at high pressures and velocities through discharge duct 34 to header 16 within the dryer hood serving compressed air nozzles 22. Compressor 32 pulls its air supply from either of two sources depending upon the condition of valves 35, 36 under control respectively of solenoids 37, 38. Solenoid 37 is so arranged that air control valve 35 is normally closed, but when the press feeding web 11 to the dryer hood is in operation, a circuit to the press controller is closed through electrical lines 39 leading to solenoid 37 which is energized and causes valve 35 to assume an open position. Return air from the hood together with some products of combustion will thus be drawn into the compressor.

Solenoid 38 is so arranged that air control valve 36 is normally open whenever the press stops or is inoperative, but when the press is in operation, the circuit arrangement through electrical lines 39 leading to solenoid 38 is such that valve 36 is closed. Thus, outside air from out of doors or from the area outside the hood, or both, will be drawn into the compressor whenever the press is halted.

The circuit arrangement to the press contro'ler also governs solenoid 40 for regulating the admission of gas from a suitable source of supply through valve 41 for feeding burner 42 within gas air heater 43. Solenoid 40 is energized whenever the press is in operation to cause valve 41 to be open to admit gas to burner 42. When the press stops the solenoid de-energizes with the result that valve 41 assumes a normally closed position. Pilot 44 serving the gas air heater feeds from a

valve 45 in advance of solenoid controlled valve 41.

The preferred forms of main burners 14 are shown in Figs. 5–8. They are designed to produce flames of desired width, easily varied to suit webs of different widths. In Figs. 5 and 6, cylindrical burner 46 is illustrated having a tapered port 47. Gas orifices 48 are provided in desired dimension and number. As shown in Fig. 6, the valve may be rotated so that the burner port 47 will be covered to any desired degree, thus providing a burner flame of any desired width. Tail piece 49 is threaded at its extremity for an external connection to gas header 15. The tail piece has a ball joint 50 held to the inner conforming wall 51 of the valve body within the burner by gland cover 52 within which is the usual packing 53. Coupling 54 connects the body of the valve turning wheel 55 to the body of the burner mounting 56. By turning the wheel 55, the wall 51 containing tapered port 47 may be shifted in position so as to expose a greater or lesser width of gas orifices 48 to the flow of gas coming from that part of the tapered port 47 which is uncovered. If the tapered port 47 is in whole uncovered, a flame of maximum width will be produced whereas the ribbon of flame will be progressively decreased in width as more of the tapered port is closed by rotation of the wheel.

In Fig. 7 a modified form of burner for accomplishing the same object is illustrated. Piston 57 within burner 58 may be advanced on threaded piston rod 59 by crank 60. One end of the shaft is held within flange 61 provided with gland cover 62 holding in place a gasket, the gland cover being held in position by a lock nut as shown. The opposite end of the piston rod is supported by a piston rod support 63 shown in detail in Fig. 8. Gas enters the burner through an entrance port 64 in the burner header.

By advancing piston 57 to the left, more and more of gas orifices 48 to the right of the piston will be put out of service by being deprived of gas until the piston reaches the entrance port 64 which is the minimum width required in practice. Thus, a wide range is provided for varying the width of the flame by simple adjustment of the burner valve structure.

The supply of gas feeds into the burner of Fig. 7 through the side while in the arrangement of Figs. 5 and 6, the gas is admitted through one end. It will be obvious that the position of the gas entrance port is a matter of design depending on the burner action, header arrangement, space limitations, or other requirements of any specific application.

The burners, arranged in the dryer hood as shown in Fig. 2, are preferably equipped with a primary pilot and a plurality of secondary pilots illustrated in Figure 9. Gas supplied to pipe 65, feeds, under control of valve 66, to a primary pilot 67. Gas may also be supplied to burners 68*a–g* through gas supply inlets 69*a–g* respectively under control of valves 70*a–g* respectively. The ends of the burner are closed by flanges 71*a–g* respectively.

Valves 70*a–g* may be opened and shut by hand or cut in and out of service automatically in coordination with the operations of the press feeding the web to the dryer.

Between each of the burners and the burner adjacent thereto is a secondary pilot designated 72*a–f* respectively. Each secondary pilot is in the form of a tube connecting two burners but having a barrier or solid flange therein to prevent the passage of gas from one burner to the other.

Thus the supply to all burners depends exclusively on the condition of valves 70*a–g* and is not influenced by the secondary pilots or connecting tubes between burners. This is clearly shown in Fig. 10 where secondary pilot 72*a* is shown connected to burner 68*b*, with solid flange or barrier 73 preventing gas from one side of the barrier to flow to the other side.

Each burner has burner shields 74 and each secondary pilot similarly has pilot shields 75. Orifices 76 for passage to gas in the burners and orifices 77 for passage of gas in the secondary pilots are positioned between the respective shields as shown in Figs. 10 and 11. The secondary tube 78 connected to burner 68*a* need not have a barrier but may have its gas passage connected with burner 68*a*. When gas is admitted through valve 70*a* to burner 68*a*, it will enter the tube 78 and be ignited by the primary pilot, whereupon the gas feeding from burner 68*a* will be ignited. The gas in secondary pilot 72*a* will also be ignited on the side of the barrier toward burner 68*a*. No combustion will take place on the other side of the barrier until gas is fed to it. When, however, gas is admitted to burner 68*b*, it will flow to the barrier in secondary pilot 72*a*. Since a gap is provided in the burner shields leading from burner 68*b* to the barrier of secondary pilot, the gas on the side of the barrier toward burner 68*b* will be ignited by the flame in the secondary pilot 72*a* on the other side of the barrier. As a result, gas feeding burner 68*b* will be ignited. The other burners will similarly be ignited by their secondary pilots as they are successively cut into service.

It will be evident that numerous details of design and construction may be varied to achieve applicant's result, and the diagrammatic representations are, therefore, intended to be illustrative and not limiting, since various alternatives will suggest themselves to those skilled in the art.

I claim:

1. A combination of apparatus including a dryer enclosure or the like, a series of burners serving the enclosure, means for supplying gas simultaneously to all of said burners, a pilot serving one of said burners, separating means providing a barrier to the flow of gas between adjacent burners, and means for supporting combustion on each side of said barrier whereby a burner located on one side of the barrier will be ignited responsive to supply of gas thereto for combustion whenever the burner on the other side of the barrier is supporting combustion.

2. In a web dryer arrangement of the character described a series of burners, connecting tubes joining adjacent burners of the series, said tubes having orifices for the discharge of gas for combustion, a partition in each tube separating the flow of gas in one burner from the flow of gas in the adjacent burner to which it is joined, a pilot for at least one of the burners, and means for supplying gas to the burners.

3. In a web dryer arrangement a dryer hood, means for routing a web to be dried through the hood, burners for directing flame in the direction of the line of travel of the web through the hood, a plurality of dampers for confining the area within the hood to maintain high temperatures produced therein while the web travels therethrough and means for opening said dampers to effect a speedy drop of temperature in the hood by circulation of outside air therethrough whenever the web travel through the hood is halted.

4. In a dryer arrangement of the character described, a dryer hood, a series of ribbon type gas burners positioned within the hood, a series of small tubes positioned within the hood alternately arranged with respect to said burners in such manner that each burner has a tube between it and the next adjacent burner, means for directing flames from said burners upon a web passing through said dryer, means for directing compressed air against such a web in a plurality of jets at pressures and velocities sufficiently high to cause impact against the surface of the web, said tubes occupying a cross-sectional area in the hood on the order of the cross-sectional area therein occupied by said burners.

5. In a dryer arrangement, a hood, means for routing a web to be dried through said hood, a plurality of burners positioned within the hood, a plurality of compressed air tubes positioned within the hood, said burners and tubes being arranged to direct alternate streams of flame and heated compressed air toward the line of travel of the web through the hood, dampers for admitting air to and relieving air from said hood, means for confining the hood by maintaining closed said dampers whenever a web passing through the hood is traveling at a desired speed, a fan for circulating air through said hood whenever said dampers are open, means for opening said dampers whenever the travel of a web

through the hood stops to permit the fan to circulate through the hood air from outside the hood to lower the temperature in the hood, and means for supplying non-heated air from said tubes against said web to prevent combustion thereof whenever the travel of the web through the hood stops.

6. A dryer arrangement, for effecting speedy drying of a printed web fed therethrough from a letter press, including an air heater, a dryer hood, a compressor, gas burner means within the heater, means for supplying air from said hood to said heater and compressor, means for supplying alternatively other air from outside the hood to said compressor, a plurality of gas burners in the hood, a plurality of compressed air tubes in the hood, said compressor delivering air to said tubes, means for routing a printed web from a letter press through the hood, flames from said burners and compressed air from said tubes being directed against the side of said web to be dried as it travels through the hood, means for cutting off the supply of air to the compressor from the heater whenever the travel of said web halts and for supplying instead to said compressor air from outside the hood, and other means for effecting a speedy reduction in temperature within the hood by circulation of outside air therethrough.

BERNARD OFFEN.