July 1, 1924. 1,499,914

F. DIEHL

SEWING MACHINE LIGHTING FIXTURE

Filed Aug. 5, 1921 2 Sheets-Sheet 1

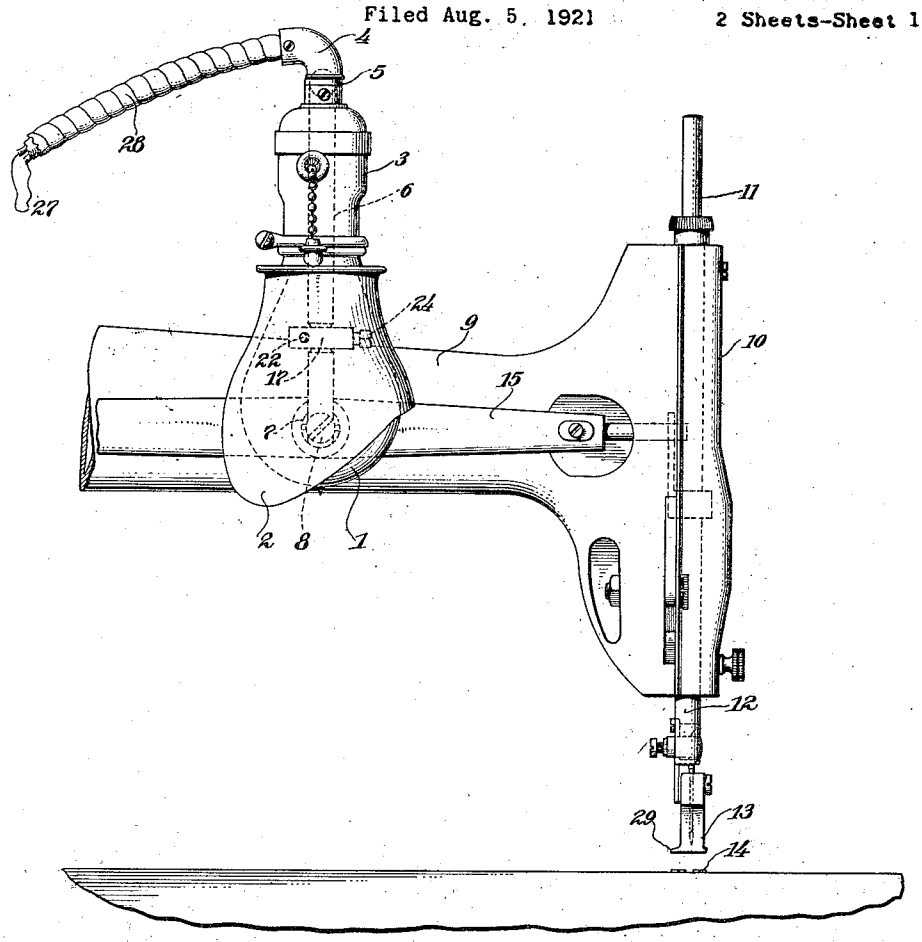

Fig. 1.

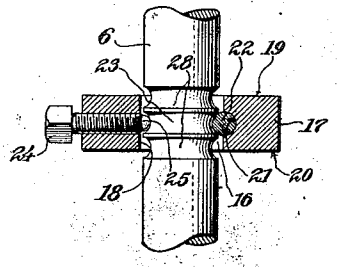

Fig. 5.

WITNESSES:
Godfrey Pecina
John F. Heinz

INVENTOR
Frederick Diehl
BY
Henry J. Miller
ATTORNEY

July 1, 1924. 1,499,914

F. DIEHL

SEWING MACHINE LIGHTING FIXTURE

Filed Aug. 5, 1921 2 Sheets-Sheet 2

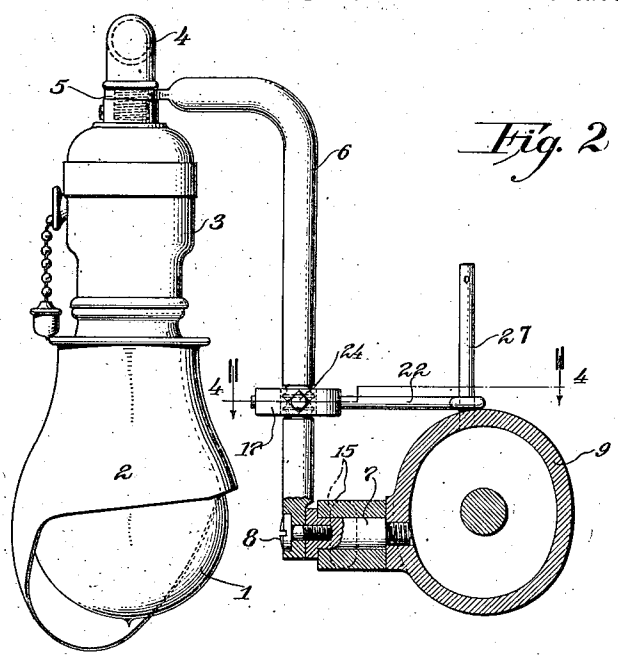

Fig. 2.

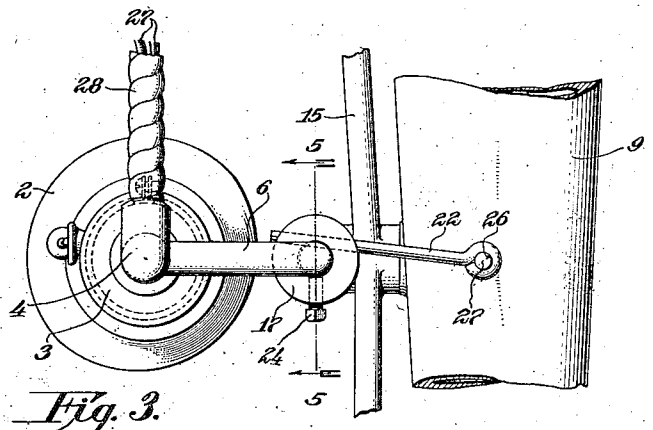

Fig. 3.

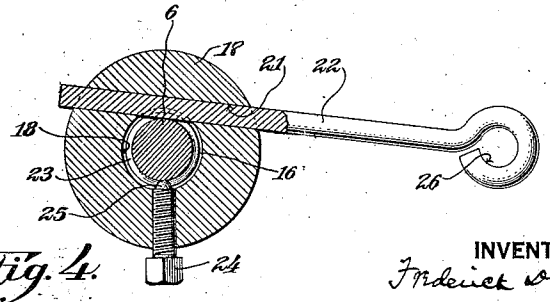

Fig. 4.

WITNESSES:
Godfrey Reima
John F. Hines

INVENTOR
Frederick Diehl
BY Henry J. Miller
ATTORNEY

Patented July 1, 1924. 1,499,914

UNITED STATES PATENT OFFICE.

FREDERICK DIEHL, OF ELIZABETH, NEW JERSEY, ASSIGNOR TO THE SINGER MANUFACTURING COMPANY, OF ELIZABETH, NEW JERSEY, A CORPORATION OF NEW JERSEY.

SEWING-MACHINE LIGHTING FIXTURE.

Application filed August 5, 1921. Serial No. 490,051.

To all whom it may concern:

Be it known that I, FREDERICK DIEHL, a citizen of the United States, residing at Elizabeth, in the county of Union and State of New Jersey, have invented certain new and useful Improvements in Sewing-Machine Lighting Fixtures, of which the following is a specification, reference being had therein to the accompanying drawings.

This invention relates to lighting fixtures for sewing machines and has for an object to provide a lighting fixture or light-carrying bracket which may be easily and rigidly secured to the usual sewing machine bracket-arm without necessitating mutilation of the arm by the drilling of special holes or by other special machining operations.

A further object of the invention is to provide a lighting fixture or bracket of an adjustable nature so that it can be rigidly applied to sewing machine arms of varying dimensions with equal facility.

Still further the invention has for an object to provide a bracket which will support the light in a position for the most effective illumination of the work without the casting of objectionable shadows by the needle- and presser-bars, bracket-arm head, or other parts carried by the bracket-arm. The invention also aims to provide for the attainment of the above objects without subjecting the operator to the discomforts of heat and glare from the light.

A sewing machine particularly of the type commonly used in garment manufacturing establishments is usually fitted with a presser-foot lifting lever which is fulcrumed on a pivot at the rear side of the horizontal member of the sewing machine bracket-arm about mid-way of the length of such member. The bracket-arm is also usually provided in the vicinity of such pivot with a vertical spool-pin. Advantage is taken in the present instance of the latent possibilities of the customary fittings on sewing machine bracket-arms, such for example as pointed out, to serve as mounting and steadying means for a lighting bracket, whereby the necessity of drilling and tapping special holes in or otherwise mutilating the bracket-arm is avoided. Users of sewing machines may thus purchase the lighting fixtures and quickly install them without difficulty and without the need for services of a skilled mechanic.

Preferably the lighting bracket comprises a light-carrying arm which may be secured in a vertical position to the pivot for the presser-foot lifting lever. This arm may, if desired, be steadied by an anchor rod rigidly secured to it, as by means of an adjustable collar, and formed with an eye embracing the spool-pin. The anchor-rod may be adjusted lengthwise in the collar or swung with the collar about the light-carrying arm, so that the position of the eye may be shifted to register with the position of the spool-pin.

In the accompanying drawings, which illustrate a preferred embodiment of the invention, Fig. 1 is a rear side elevation of a lighting bracket embodying the invention and applied to a sewing machine. Fig. 2 is a front elevation of the bracket; the sewing machine arm being shown in cross-section. Fig. 3 is a top plan view, Fig. 4 is a sectional view on the line 4—4, Fig. 2, and Fig. 5 is a sectional view on the line 5—5, Fig. 3.

The lighting fixture illustrated comprises the usual lamp 1 and reflector 2 carried by the pull-socket 3 into which is threaded the male end of a street-L 4 which also passes through the apertured ear 5 at the free end of the inverted L-shaped lighting arm 6 the lower apertured end of which is secured to the head of the pivot-screw 7 by means of a screw 8, the pivot-screw 7 being threaded into the usual pivot-screw receiving aperture in the rear wall of the horizontal member 9 of the sewing machine bracket-arm which terminates in the usual head 10 carrying the needle and presser-bars 11 and 12 respectively, the latter carrying the presser-foot 13 which cooperates with the feed-dog 14 to feed the work. The pivot-screw 7 serves in lieu of a similar screw regularly furnished with the machine and having an untapped head to support the usual presser-lifting lever 15.

Freely embracing the lighting arm 6 so as to allow a certain amount of clearance 16 is a collar 17 substantially tangentially of the aperture 18 in which and parallel to and between the faces 19 and 20 is the center-line of the aperture or socket 21 for the anchor-rod 22, the shank of such rod extending somewhat into the cylindrical space within the aperture 18, as shown in Figs. 4 and 5, and being thereby adapted to be held in clamping engagement with a circumferential groove 23 formed in the lighting arm 6. The set-screw 24 carried by the collar 17 and having a rounded end 25 adapted to enter the groove 23 serves to tighten the collar 17 upon the rod 22 and to rigidly secure the collar and rod to the arm 6. The rod 22 is formed at its free end with an eye 26 of a size to snugly embrace the usual spool-pin 27 rising from the sewing machine bracket-arm 9 in proximity to the pivot-screw 7.

It will be observed that the collar 17 and rod 22 may be adjusted circularly about the arm 6 which arm may be provided with additional grooves 28, similar to the groove 23 to permit vertical adjustment of the collar 17 and rod 22 on such arm. Further, the rod 22 may be adjusted in and out relative to the collar 17. The circular and in-and-out adjustments enable the eye 26 to be positioned in register with the position of the spool-pin of the particular machine to which the fixture is to be applied. The vertical adjustment on the arm 6 may be useful in positioning the eye 26 at the base of the spool-pin on certain machines.

Electric current may be supplied to the light from any suitable source by means of the conductors 27 within the conduit 28 leading to the elbow 4.

By means of the present improvement the lamp 1 may be located in rear of the sewing machine bracket-arm 9 and well to one side of the head 10, thereby avoiding the casting upon the work of objectionable shadows of parts carried by the sewing machine bracket-arm. With the light so located, the arm 9 will also serve to shield the eye and face of the operator from the glare and heat of the lamp, a feature of great practical importance. The light will be directed toward the inner edge 29 of the presser-foot 13 which edge is customarily used as a sight in guiding the edge of the work being stitched.

The invention is not to be understood as limited to its use on sewing machines having presser-lifting levers, since the lighting arm 6 may obviously be secured to the sewing machine arm 9 otherwise than through the use of the pivot-screw 7. A pivot-screw 7, tapped to receive the screw 8, may, however, in some cases, be furnished as a part of the lighting attachment, such screw 7 being adapted for substitution for the presser-lever pivot-screw of a sewing machine having a presser-lifting lever.

Having thus set forth the nature of the invention, what I claim herein is—

1. A lighting fixture for sewing machines comprising, a lighting arm adapted to be secured to a sewing machine bracket-arm, an anchor-rod having an eye at one end adapted to embrace the usual sewing machine spool-pin, and adjustable clamping means for securing said rod in angular relation to said lighting arm, said means permitting the anchor-rod to be adjusted endwise of itself or swung about the lighting arm as a center.

2. A lighting fixture for sewing machines comprising, a lighting arm adapted to be secured to a sewing machine bracket-arm, an anchor-rod adapted to embrace the usual sewing machine spool-pin, a collar mounted on and adjustable lengthwise and circularly of the lighting arm, said collar having an aperture disposed transversely of said lighting arm for receiving the anchor-rod and permitting an in-and-out adjustment of the latter.

3. A lighting fixture for sewing machines comprising, a lighting arm, an electric lamp socket carried by such arm, means at one end of said arm adapting the latter for attachment to a sewing machine bracket-arm, a collar having apertures disposed transversely to one another and through one of which said lighting arm passes, an anchor-rod passing through the other aperture and adapted to embrace the usual sewing machine spool-pin, and releasable means for tightening the collar to the lighting arm and anchor-rod.

4. A lighting fixture for sewing machines comprising, a lighting arm, an electric lamp socket carried by such arm, means at one end of said arm adapting the latter for attachment to a sewing machine bracket-arm, a collar having intersecting apertures disposed transversely to one another and through one of which said lighting arm passes, an anchor-rod passing through the other aperture and adapted to embrace the usual sewing machine spool-pin, and a single releasable means for tightening the collar to the lighting arm and anchor-rod.

5. A lighting fixture for sewing machines comprising, a lighting arm adapted to be secured to a sewing machine bracket-arm, an anchor-rod adapted to be secured to a customary fitting on such bracket-arm, a collar mounted on said lighting arm and formed with a socket for reception of said anchor-rod, said socket intersecting the aperture in the collar, and tightening means for causing the collar and lighting arm to grip the anchor-rod between them.

6. The combination with a sewing machine having a bracket-arm, a spool-pin ris-

ing vertically from said bracket-arm and a presser-foot lifting lever, of a headed fulcrum-screw secured to the bracket-arm adjacent said spool-pin, an inverted L-shaped light-carrying arm rigidly secured at its lower end to the head of said fulcrum-screw, a lighting element secured to the overhanging end of said arm, and an anchor-rod secured to the vertical portion of said lighting-arm and formed with an eye embracing said spool-pin.

In testimony whereof, I have signed my name to this specification.

FREDERICK DIEHL.