Nov. 12, 1940. H. K. STEEN 2,221,617

METHOD OF MAKING HANDLED SHOPPING BAGS

Filed Jan. 19, 1938

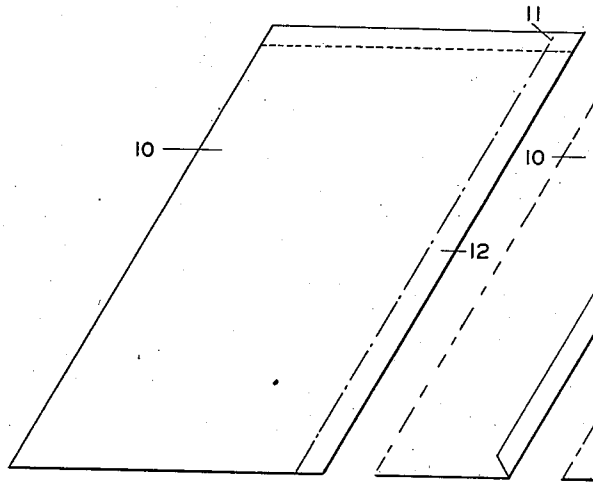

FIG. 1

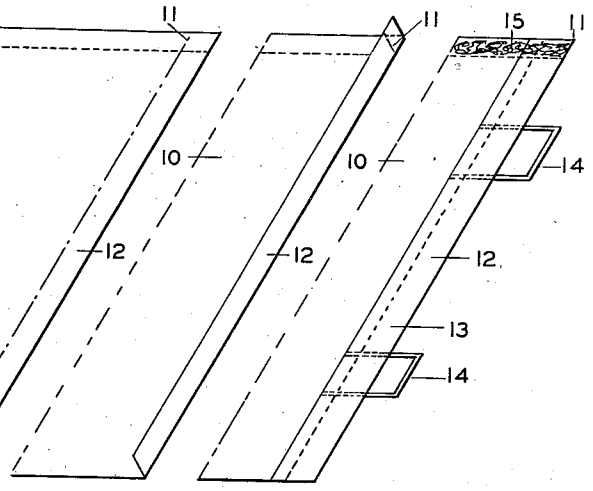

FIG. 2 FIG. 3

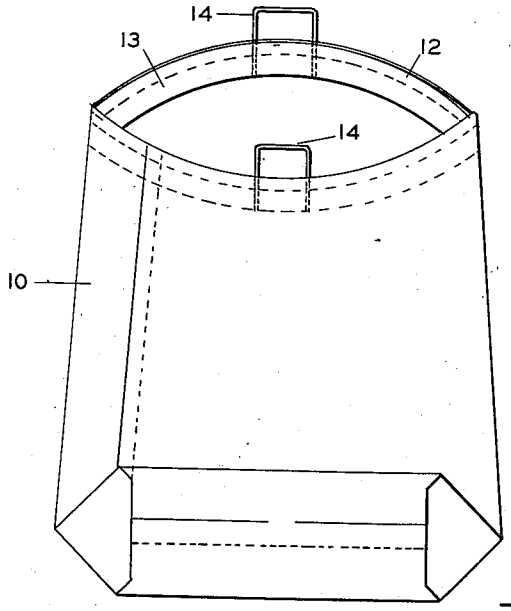

FIG. 4

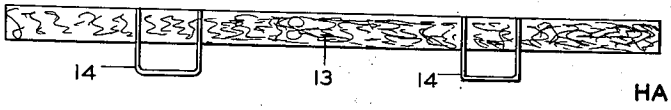

FIG. 5

Inventor

HARFORD K. STEEN

By O. A. Gustafson

Attorney

Patented Nov. 12, 1940 2,221,617

UNITED STATES PATENT OFFICE

2,221,617

METHOD OF MAKING HANDLED SHOPPING BAGS

Harford K. Steen, Newburgh, N. Y.

Application January 19, 1938, Serial No. 185,755

5 Claims. (Cl. 93—35)

Shopping bags are made from a web, or stock roll run through a bag machine, handles attached tubed, cut off and bottomed as shown in my previous U. S. patents, No. 1,799,072 issued to me on March 31, 1931, for Method of manufacturing shopping bags; No. 2,060,450 issued to me Nov. 10, 1936, for Machine for making handled shopping bags; No. 2,060,451 issued to me Nov. 10, 1936, for Method of making handled shopping bags; No. 2,062,617 issued to me Dec. 1, 1936, for Handled shopping bag; No. 2,076,680 issued to me April 13, 1937, for Shopping bag, and application Serial Number 108,824 filed Nov. 2, 1936, for Method of making handled shopping bags.

This invention relates primarily to handled shopping bags, made of paper or other suitable material, fabricated from a blank of bag length and width which is cut from a web or stock roll and fed continuously into a bag making machine.

The particular object of the invention is to make a handled shopping bag from a bag blank in place of the usual web from a stock roll, also a web may be employed if desired.

Another object of the invention is to make a bag of this kind having a folded in edge at its open end to provide a strong non-tearing edge and also a smooth edge to facilitate the easy insertion and withdrawal of the contents.

Another object of the invention is to form a bag with a reinforced edge to which the cord handles are secured between said reinforced folded edge and a band or strip of either single or double material, or patches as in Patent No. 2,060,451, or duplex bag as in Patent No. 1,799,072, secured thereto and upon the handles by an adhesive or other suitable means.

With these and other objects in view, my invention consists in certain new and useful construction and combination of parts as will hereinafter be fully described and claimed, and further illustrated in the accompanying drawing, which forms a part hereof and in which like figures of reference refer to corresponding parts in all of the views, but it is understood that slight changes may be made without departing from the spirit of the invention.

In the drawing:

Figure 1 shows a bag blank.

Figure 2 shows the forward end of the same with the edge forming flap partly turned in.

Figure 3 shows the same end after the flap has been fully turned in, the handles and retaining strip attached, and the adhesive applied for the tubing seam.

Figure 4 shows the finished bag.

Figure 5 shows the handle attaching and bag reinforcing band with the handles spotted thereon.

Referring to the drawing:

In Figure 1, I show a bag blank 10 of the required size to form the bag required; and in Figure 2, I have shown the forward end of the blank 10 turned up and back to form a flap 12 which is pressed down upon the blank 10 to form a double thick edge as shown in Figure 3. The flap 12 may be secured by an adhesive or other fastening means if patches, strip, or complete liner is employed to secure handles 14 to the bag blank 10.

Upon this folded edge 12 is secured by an adhesive or other suitable means a reinforcing and handle securing means or annular band 13 or patch, strip or liner which is coated upon one side with the adhesive and upon which are spotted the two handles 14; and the band 13 or patch, strip or liner carrying the handles 14 is applied upon the fold 12 and the blank 10 after which the blank 10 is tubed and held by adhesive 15 and bottomed to form the finished bag.

The tubing may be done so the handles 14 will be upon the inner or outer surface of the bag.

Having thus described my invention, what I claim as new and desire to secure by Letters Patent, is:

1. The method of making shopping bags having handles, which includes feeding a bag length blank, folding over the forward edge, forming a transverse reinforcing band, coating one side thereof with an adhesive, spotting cord handles thereon, applying said band together with the handles to the forward edge of the blank, applying an adhesive to one edge of the blank for subsequent seaming, and tubing and bottoming said blank into a bag.

2. The method of manufacturing shopping bags from blanks or the like which includes scoring said blank transversely adjacent to the forward end to form a flap, and folding the same upon the blank, forming a handle and reinforcing band, applying an adhesive to one side thereof, spotting handles thereon, and securing both the handles and the band upon said flap and blank, applying a strip of adhesive to one edge of the blank for subsequent seaming, then tubing and bottoming said blank into a bag.

3. In the method of making handled shopping bags from individual blanks and handles having grip and body portions in which the operations are performed of applying an adhesive to one edge

of the blank, tubing the blank and bottoming the same, the improvement which consists in scoring and folding over an end of the blank to provide a double thick edge, previously forming a band having grip portions of said handles attached thereto, then applying said band and adhesively securing same adjacent and parallel to said folded over edge and over the flap so formed, and then performing the operations aforesaid of tubing said blank with handles attached and bottoming the same, whereby in the completed bag said handles are secured between said band and said blank with the grip portions extending directly from the imperforate open end of the bag.

4. In the method of making handled shopping bags from individual blanks and handles having grip and body portions in which the operations are performed of applying an adhesive to one edge of the blank, tubing the blank and bottoming the same, the improvement which consists in previously forming a band having grip portions of said handles attached thereto, then applying said band and adhesively securing the same adjacent and parallel to an edge of the blank, and then performing the operations aforesaid of applying an adhesive to an edge of the blank transverse to said edge having the handles attached, and the tubing and bottoming operations whereby in the completed bag said handles are secured between said band and said blank with the grip portions extending directly from the imperforate open end of the bag.

5. In the method of making handled shopping bags from individual blanks and handles having grip and body portions in which the operations are performed of applying an adhesive to one edge of the blank, tubing the blank and bottoming the same, the improvement which consists in previously forming a band having attached thereto at spaced intervals the grip portions each of a pair of handles, then applying said band and adhesively securing the same adjacent and parallel to an edge of the blank, and then performing the operations aforesaid of applying an adhesive to an edge of the blank transverse to said edge having the handles attached, tubing the blank along a line intermediate said handles and bottoming same, whereby in the completed bag said handles are secured between said band and said blank with the grip portions extending directly from the imperforate open end of the bag.

HARFORD K. STEEN.