Sept. 13, 1955 C. T. BEESON 2,717,421

PRESS FOR MOLDS AND THE LIKE

Filed Sept. 12, 1952 2 Sheets-Sheet 1

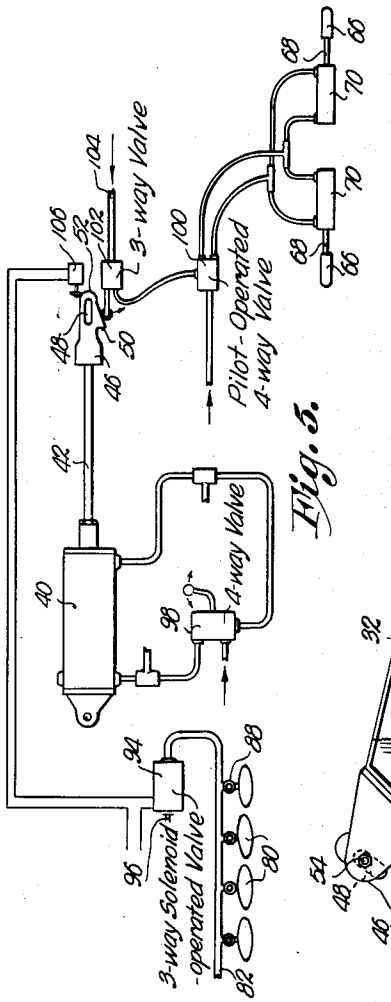

Fig. 5.

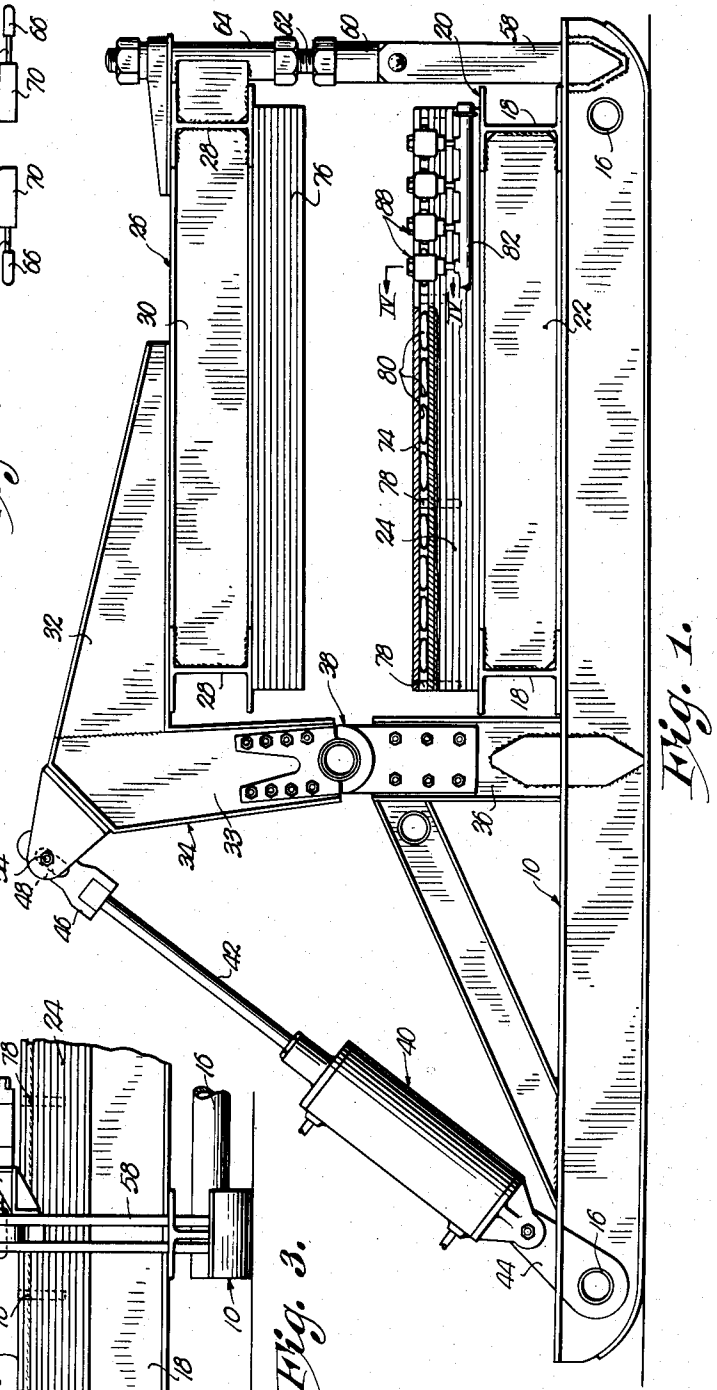

Fig. 1.

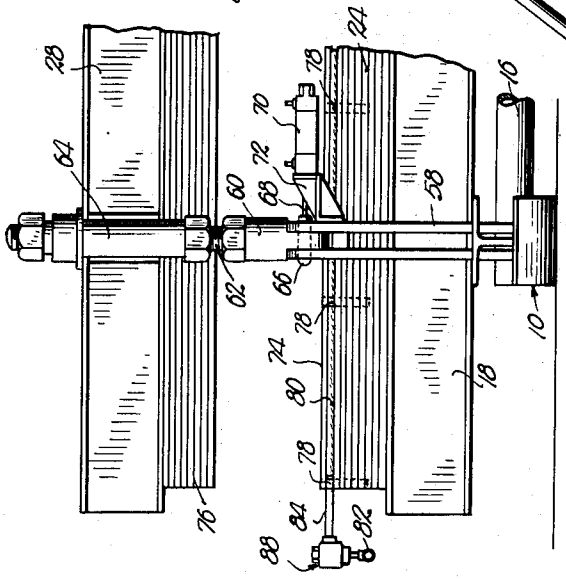

Fig. 3.

INVENTOR.
Clement T. Beeson
BY
ATTORNEY

Sept. 13, 1955 C. T. BEESON 2,717,421

PRESS FOR MOLDS AND THE LIKE

Filed Sept. 12, 1952 2 Sheets-Sheet 2

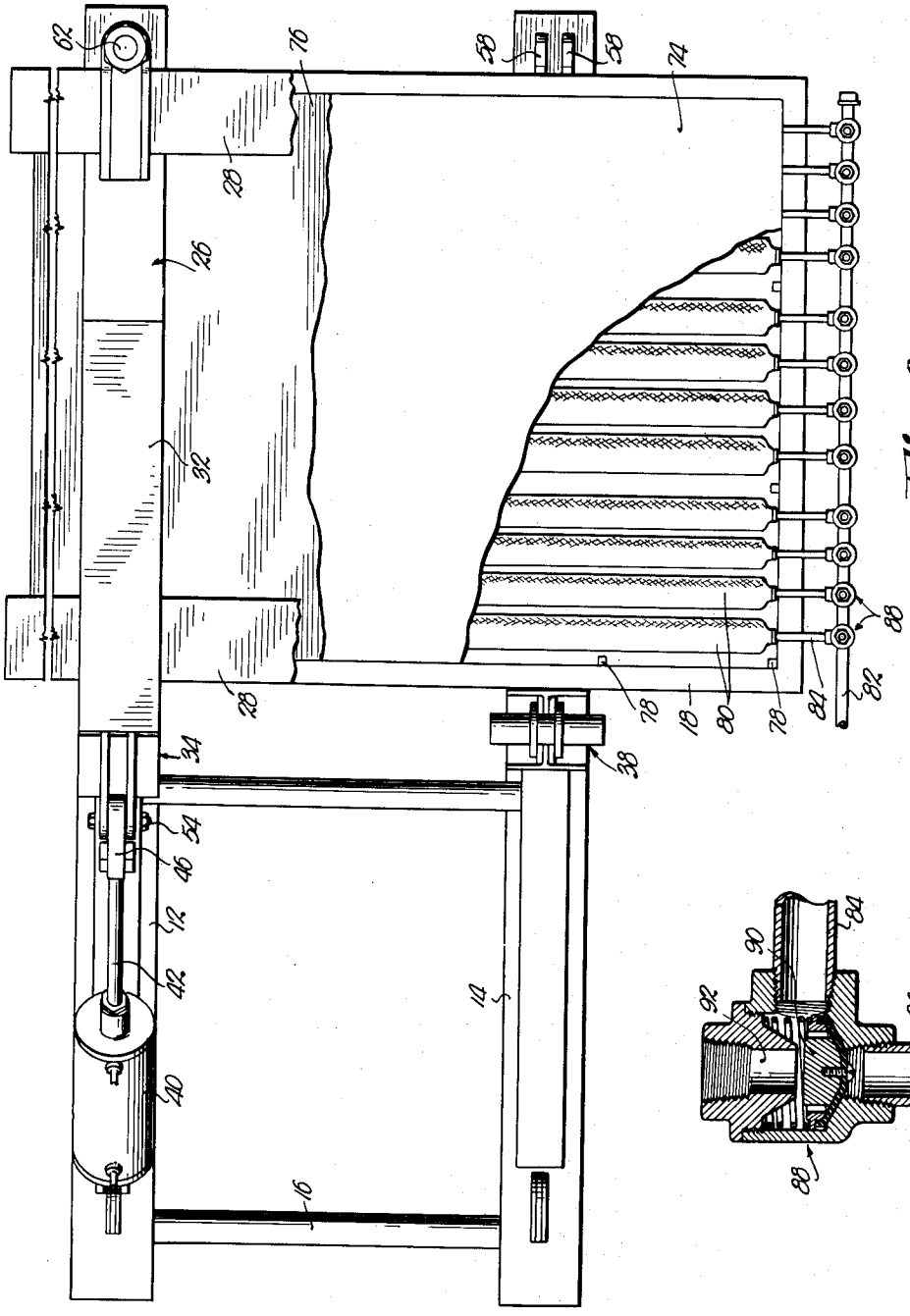

Fig. 2.

Fig. 4.

INVENTOR.
Clement T. Beeson
BY
ATTORNEY.

United States Patent Office 2,717,421 Patented Sept. 13, 1955

2,717,421

PRESS FOR MOLDS AND THE LIKE

Clement T. Beeson, Tulsa, Okla., assignor to Plastic Products Corporation, Tulsa, Okla., a corporation of Oklahoma

Application September 12, 1952, Serial No. 309,331

3 Claims. (Cl. 18—17)

This invention has to do with devices in the nature of a press and particularly to that class of mechanism for use in connection with the manufacture of molded products, the primary aim being to provide a relatively inexpensive mold-receiving press that is adapted for opening and closing, and when open, to present adequate clearance for removal of the molds as well as the molded product and subsequent return of the molds for successive operations.

A very important object of the present invention is the provision of press-like apparatus that includes a pair of relatively shiftable sections, together with means for accomplishing the shifting movement and a lock or interconnection for the sections to hold the same against separation during subsequent molding operations which includes application of pressure.

Another object hereof is to provide a press that includes a lowermost stationary section and an upper section shiftable to and from a closed position, there being provided a lock for joining the sections when the upper section is in the closed position, together with inflatable means utilized to press the molds tightly against the substance from which the molded product is made, the pressure means being entirely separate from the structure utilized to shift the upper section.

Another important object hereof is to provide a predominantly automatic device of the aforementioned type operable upon mere actuation of a control valve, to shift the upper section to a closed position, actuate a coupling element for the sections, and thereupon direct air pressure to the inflatable means, all without operator attention after opening said valve.

Another object hereof is to provide a press for molds and the like operable again upon actuation of the control valve to immediately and quickly evacuate the inflatable means, thereby relieving the pressure on the coupling means, and finally swinging the uppermost section of the press to an open position where the molds and the finished product can be easily and expeditiously removed from the press.

A still further object hereof is to provide a press that is entirely controlled by hydraulic or pneumatic pressure including therefore, double acting pistons for swinging the movable section and actuating the coupling elements for the sections, the same pressure source being utilized to inflate a plurality of tubular hose-like elements for forcing the molds into tight clamping relationship with the substance forming the finished product.

In the drawings:

Figure 1 is a fragmentary, side elevational view of a press for molds and the like made pursuant to the present invention.

Fig. 2 is a fragmentary, top plan view thereof, parts being broken away for clearness.

Fig. 3 is a fragmentary, end elevational view thereof.

Fig. 4 is an enlarged, fragmentary, detailed, cross-sectional view taken on line IV—IV of Fig. 1; and

Fig. 5 is a diagrammatical view showing in part the hydraulic system for controlling the operation of the press.

Manifestly, there has heretofore been provided many and various types of presses adapted for many purposes including the production of molded products. For the most part however, those types of conventional presses that are adapted to handle relatively large molds, and therefore, products produced thereby, are, by virtue of the necessity of creating relatively high pressures, expensive, burdensome, not readily movable from point to point and not easily used because of the difficulty in removing the finished product since the various parts of the presses are not shiftable entirely to a point of clearance.

By way of explanation, the press about to be described has been developed primarily to produce relatively large molded panels in the construction of storage tanks used in the petroleum industry. Some of the panels are transversely arched and may vary in size to as large as many feet in length and width.

As will hereinafter appear, the press of the present invention is well adapted to form such panels from any suitable synthetic plastics now available on the open market. It will become obvious however, after a full understanding of the principles hereof, that the press of the present invention may be made in any size and will have many uses in other fields, because of the novel advantageous features embodied therein.

A main frame broadly designated by the numeral **10** in Figs. 1 and 2 of the drawings, includes a pair of elongated, preferably parallel beams **12** and **14**, that may be as illustrated, formed in the shape of sled runners if desired, thereby rendering the press portable by merely connecting the same with a tractor or the like.

The two beams **12** and **14** are in turn interconnected by a plurality of cross rods **16**. The beams **12** and **14** are also rigidly interconnected by a pair of transverse, H-shaped cross members **18** forming a part of a lowermost stationary section or jaw broadly designated by the numeral **20**. Section **20** includes additionally, one or more longitudinally extending braces **22** that interconnect the cross members **18**—**18**. The cross members **18** carry a laminated, polygonal block **24** that may be affixed thereto if desired, and is preferably formed from a plurality of superimposed sheets or panels such as plywood.

A second section or jaw broadly designated by the numeral **26** normally overlying the section **20**, includes a pair of cross members **28** similar to the members **18** interconnected by one or more braces **30**, the section **26** being in underlying relationship to one leg **32** of a pair of L-shaped member **34** to which the section **26** is rigidly affixed by welding or other means of attachment. Each beam **12** and **14** respectively, carries an upright **36** for swingably receiving the corresponding L-shaped member **34** by means of a hinge **38** coupled with normally vertical leg **33** of the member **34**. It is thus seen that the section **26** is swingable toward and away from the section **20** on a horizontal axis upon applying fluid pressure to a double-acting, reciprocable piston within a cylinder **40**, there being a stem **42** connected to the piston in cylinder **40**. There are in fact, two cylinders **40** with their accompanying pistons and stems **42**, one for each beam **12** and **14** respectively, and accordingly, one for each L-shaped member **34** respectively. The cylinders **40** are pivotally connected to their corresponding beams **12** and **14** by means of a link **44**, one of the cross rods **16** conveniently serving as a means of joining the links **44** to the main beams **12** and **14**. Each stem **42** is provided with a head **46** having an elongated slot **48** (see also Fig. 5), and a pair of cams **50** and **52** is formed on one of the heads **46**. The slots **48** each receive a pivot pin **54** interconnecting spaced ears **56** projecting from the member **34** to which the same are attached, and adjacent

the point of merger between the legs 32 and 33 of member 34.

A pair of spaced, upstanding, elongated bars 58 secured to each beam 12 and 14 respectively at that end thereof opposite to the links 44, is adapted to receive a T-shaped head 60 on an adjustable bolt 62 that is in turn received by a tube 64 secured to the uppermost section 26. The head 60 and the bars 58 are provided with openings that are in alignment when the section 26 is closed as shown in Figs. 2 and 3, and a locking pin or bolt 66, insertable in such aligned openings, is mounted on one end of a stem 66 secured to a double-acting reciprocable piston not shown, within a hydraulic cylinder 70, the latter being secured to the bars 58 by means of a bracket 72.

It is to be understood at this juncture that there are two cylinders 70, together with their corresponding elements, that includes bars 58, heads 60, bolts 62 and tubes 64. (See also Fig. 5.) Molds (not shown) for use with the press hereof, are disposed between a flat panel 74 overlying the laminated block 24 of section 20 and a second similarly formed laminated block 76 secured to the section 26 and forming a part thereof below the members 28. The plate 74 is freely shiftable toward and away from the block 24 and limited in its extent of movement toward the block 24 by spacers 78. Thus, the plate 74 is loosely received by the block 24 and means not herein shown, may be provided if desired, to hold the panel 74 against lateral displacement relative to the block 24.

A plurality of elongated, side-by-side, inflatable members in the nature of hoses 80, are interposed between the panel 74 and the block 24, and while it is to be preferred that the end of the hoses 80 not shown in Fig. 2 of the drawings, be closed, hoses 80 may be interconnected in the form of a coil if desired. Hoses 80 are made from flexible material capable of flattening when deflated as shown in Fig. 1 of the drawings, and any suitable material including canvas such as commonly employed in fire hose, may be used in producing the inflatable members 80.

An elongated manifold 82 adapted to receive air under pressure is disposed at one end of the hoses 80 and joined thereto through the medium of short pipes 84 and 86. Each pair of pipes 84 and 86 is interconnected by valve structure 88, including a spring-loaded, reciprocable valve 90 normally closing the pipe 86 and shiftable to a position closing an outlet port 92.

In addition to the components hereinabove set forth, the hydraulic system includes (see Fig. 5) a 3-way solenoid-operated valve 94 coupled with the manifold 82, and with a source of air under pressure (not shown) by means of a supply pipe 96. The two cylinders 40 are likewise coupled with such air supply through a 4-way manually operable valve 98. The two cylinders 70 are operably coupled with the source of air pressure through a pilot operated 4-way valve 100 that is in turn connected with a 3-way valve 102 for operation thereby, valve 102 having a supply pipe 104 connected with the source of air supply. The electric circuit for the 3-way solenoid-operated valve 102, includes a switch 106 having its actuating means within the path of travel of cam 52, it being noted also in Fig. 5 that the actuating means for the 3-way valve 102 is within the path of travel of the cam 50. Accordingly, both the switch 106 and the valve 102 are mounted on one of the pairs of ears 56.

In operation, let it be assumed at the outset that the section 26 is swung away from the section 20 to its open position, the piston stems 42 thereby being retracted and the pins 66 obviously being pulled from their corresponding openings in the heads 60 and bars 58.

After the molds and the substance for producing a finished product therebetween are placed upon the panel 74, the operator need merely actuate the 4-way valve 98 and the operation of the press is thereafter automatic. Movement of the control arm of valve 98 in one direction, admits air pressure to the cylinders 40 on one side

of the pistons therein contained, to shift the stems 42 upwardly, section 26 swinging downwardly to the position shown in Figs. 1 and 3 by its inherent weight. As soon as the heads 60 come to rest on the bars 58, the load of the section 26 is taken off the heads 46 and continued movement of the heads 46 operates the valve 102 by virtue of the cam 50 on one of the heads 46 engaging the same as shown in Fig. 5.

The air pressure thus admitted to the valve 100 operates the latter in a direction to direct air pressure to one side of the pistons in cylinder 70, thereby projecting the stems 68 and their pins 66 into corresponding aligned openings in heads 60 and bars 58. When the cam 52 on one of the heads 46 actuates the switch 106, the solenoid valve 94 admits air pressure to the manifold 82 and accordingly, to the hoses 80. As soon as these inflatable mediums expand, the panel 74 is moved toward the block 76 and pressure thereby applied to the molds. The operator thereupon actuates the control means for valve 98 to admit pressure to the opposite side of the pistons within cylinders 40 and as soon as valve 94 is again operated by actuation of switch 106, air pressure within the bodies 80 will be exhausted therefrom through their valves 88 and particularly through the exhaust opening 92 thereof. In this respect it is noted that when air pressure is directed to the bodies 80, the valve 90 will yield, opening the pipes 86, closing the openings 92 and presenting a passage for the air into the pipes 84; as soon as valve 102 is again actuated to operate switch 100, air pressure will be directed to the cylinders 70 to retract the pins 66, whereupon the cylinders 40 swing the section 26 away from the position shown in Figs. 1 and 3 to a position fully clearing the molds and the molded product therebetween for removal from the press and for reinsertion of succeeding molds.

It is manifest that the pressure system of the present invention makes it possible to apply heat to the molds if such is necessary during the pressing stage of the molding operations.

Having thus described the invention, what is claimed as new and desired to be secured by Letters Patent is:

1. In a mold press of the kind having an upper and a lower section hingedly interconnected for swinging movement of the upper section toward and away from the lower section, stop means limiting the extent of movement of the upper section toward the lower section, lock means including a shiftable bolt for interconnecting the section, and power means including a reciprocable stem for swinging the upper section, the improvement of which comprises a control assembly including a pivot pin mounted on the upper section; a head mounted on said stem and provided with a pin-receiving opening, said opening being elongated, providing for lost motion in the stem as the latter is reciprocated to swing the upper section toward and away from said stop means; a fluid motor for shifting said bolt; and a valve for controlling flow of fluid to and from the motor, said valve having an operating member within the path of travel of the head for actuation thereby as the stem continues to move relative to the pin after the upper section engages the stop means.

2. In a mold press of the kind having an upper and a lower section hingedly interconnected for swinging movement of the upper section toward and away from the lower section, stop means limiting the extent of movement of the upper section toward the lower section, inflatable pressurizing means forming a part of one of the sections, structure for directing fluid under pressure to said pressurizing means, and power means including a reciprocable stem for swinging the upper section, the improvement of which comprises a control assembly including a pivot pin mounted on the upper section; a head mounted on said stem and provided with a pin-receiving opening, said opening being elongated, pro-

viding for lost motion in the stem as the latter is reciprocated to swing the upper section toward and away from said stop means; an electric valve for controlling flow of fluid in said structure; and switch means for controlling said valve, said switch means having an operating member within the path of travel of the head for actuation thereby as the stem continues to move relative to the pin after the upper section engages the stop means.

3. In a mold press of the kind having an upper and a lower section hingedly interconnected for swinging movement of the upper section toward and away from the lower section, stop means limiting the extent of movement of the upper section toward the lower section, lock means including a shiftable bolt for interconnecting the section, inflatable pressurizing means forming a part of one of the sections, structure for directing fluid under pressure to said pressurizing means, and power means including a reciprocable stem for swinging the upper section, the improvement of which comprises a control assembly including a pivot pin mounted on the upper section; a head mounted on said stem and provided with a pin-receiving opening, said opening being elongated, providing for lost motion in the stem as the latter is reciprocated to swing the upper section toward and away from said stop means; an electric valve for controlling flow of fluid in said structure; switch means for controlling said valve; a fluid motor for shifting said bolt; and a valve for controlling flow of fluid to and from the motor, said valve and said switch means each having an operating member within the path of travel of the head for actuation thereby as the stem continues to move relative to the pin after the upper section engages to stop means.

References Cited in the file of this patent

UNITED STATES PATENTS

1,895,296	Shook et al.	Jan. 24, 1933
2,000,406	Michelson	May 7, 1935
2,084,562	Schafer	June 22, 1937
2,301,125	Kramp et al.	Nov. 3, 1942