US00D865004S

(12) United States Design Patent

McGinley et al.

(10) Patent No.: US D865,004 S
(45) Date of Patent: ** Oct. 29, 2019

(54) **TRACTION MOTOR CASE**

(71) Applicant: **Harley-Davidson Motor Company Group, LLC**, Milwaukee, WI (US)

(72) Inventors: **Ben McGinley**, Glendale, WI (US); **Brad Richards**, Grafton, WI (US); **Kirk Rasmussen**, Springville, UT (US); **Ronald Hurth**, Beaver Dam, WI (US); **David Isaac Aunkst**, St. Francis, WI (US)

(73) Assignee: **Harley-Davidson Motor Company Group, LLC**, Milwaukee, WI (US)

(**) Term: **15 Years**

(21) Appl. No.: **29/658,224**

(22) Filed: **Jul. 30, 2018**

(51) **LOC (12) Cl.** **15-01**

(52) **U.S. Cl.**
USPC **D15/5**

(58) **Field of Classification Search**
USPC D15/1–6, 14, 148, 149; D13/112; D12/110
CPC F02F 2007/0075; H02K 5/15; F01M 5/00; F16M 1/026; F02P 3/02; F02B 37/013
See application file for complete search history.

(56) **References Cited**

U.S. PATENT DOCUMENTS

D753,552 S 4/2016 McGinley et al.
D781,920 S * 3/2017 Hsu D15/3
D839,921 S * 2/2019 Savage D15/3
2009/0126522 A1 * 5/2009 Albulushi F16H 3/089 74/329
2018/0215255 A1 * 8/2018 Kronsteiner B60K 1/00

* cited by examiner

Primary Examiner — T Chase Nelson
Assistant Examiner — Ania Aman
(74) *Attorney, Agent, or Firm* — Michael Best & Friedrich LLP

(57) **CLAIM**

We claim the ornamental design for a traction motor case, as shown and described.

DESCRIPTION

FIG. **1** is a front perspective view of a traction motor case;
FIG. **2** is a rear perspective view thereof;
FIG. **3** is a front view thereof;
FIG. **4** is a rear view thereof;
FIG. **5** is a right side view thereof;
FIG. **6** is a left side view thereof;
FIG. **7** is a top view thereof;
FIG. **8** is a bottom view thereof; and,
FIG. **9** is a rear perspective view of the traction motor case on a motorcycle.
The broken lines are included for the purpose of showing environment that forms no part of the claimed design.

1 Claim, 9 Drawing Sheets

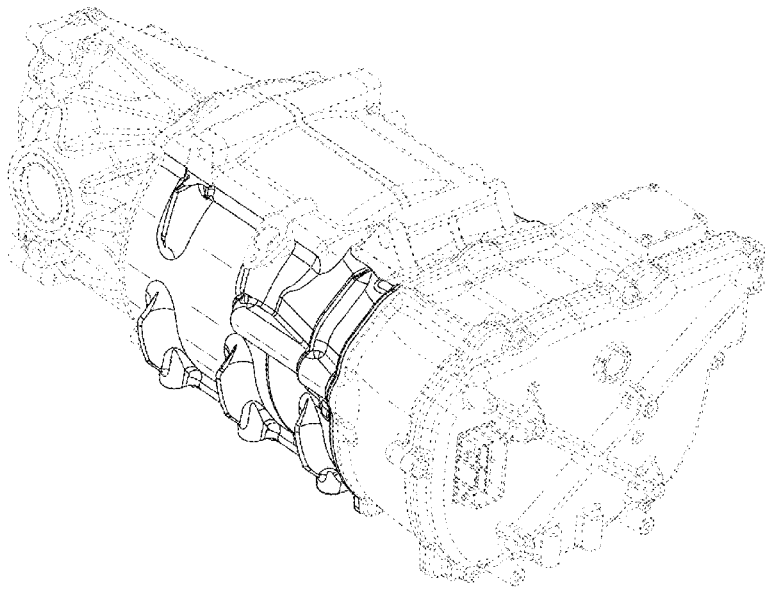

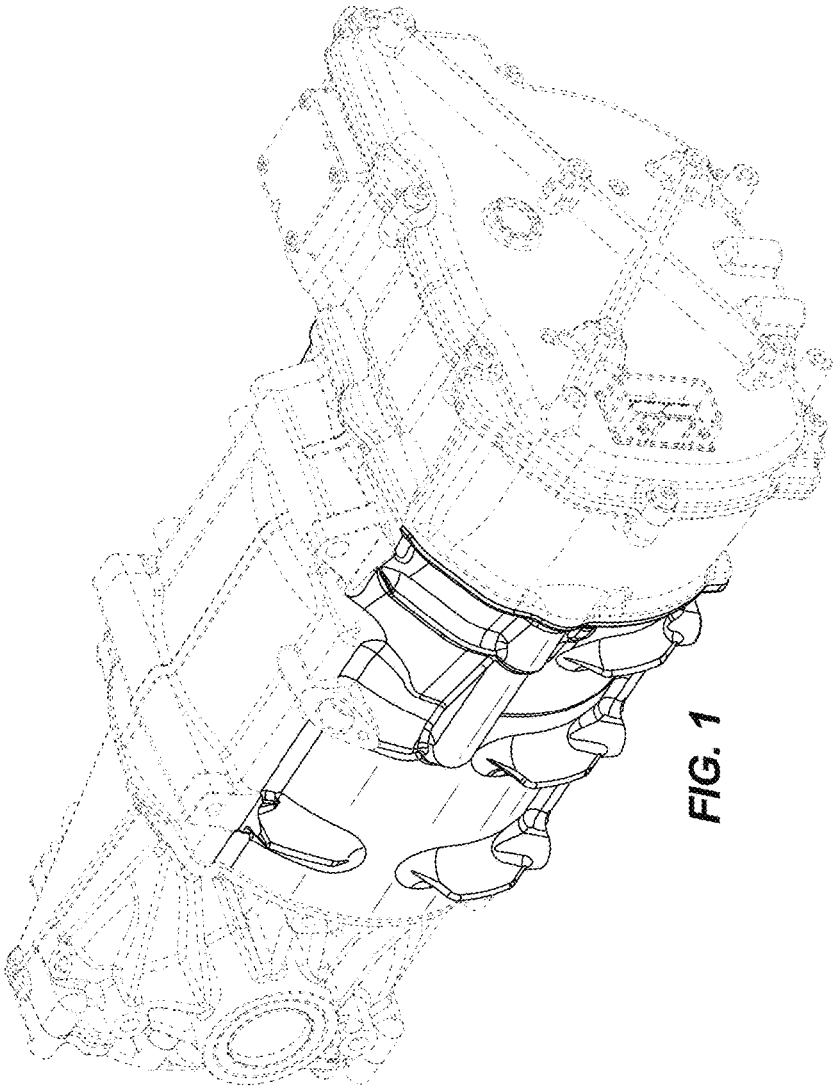

FIG. 1

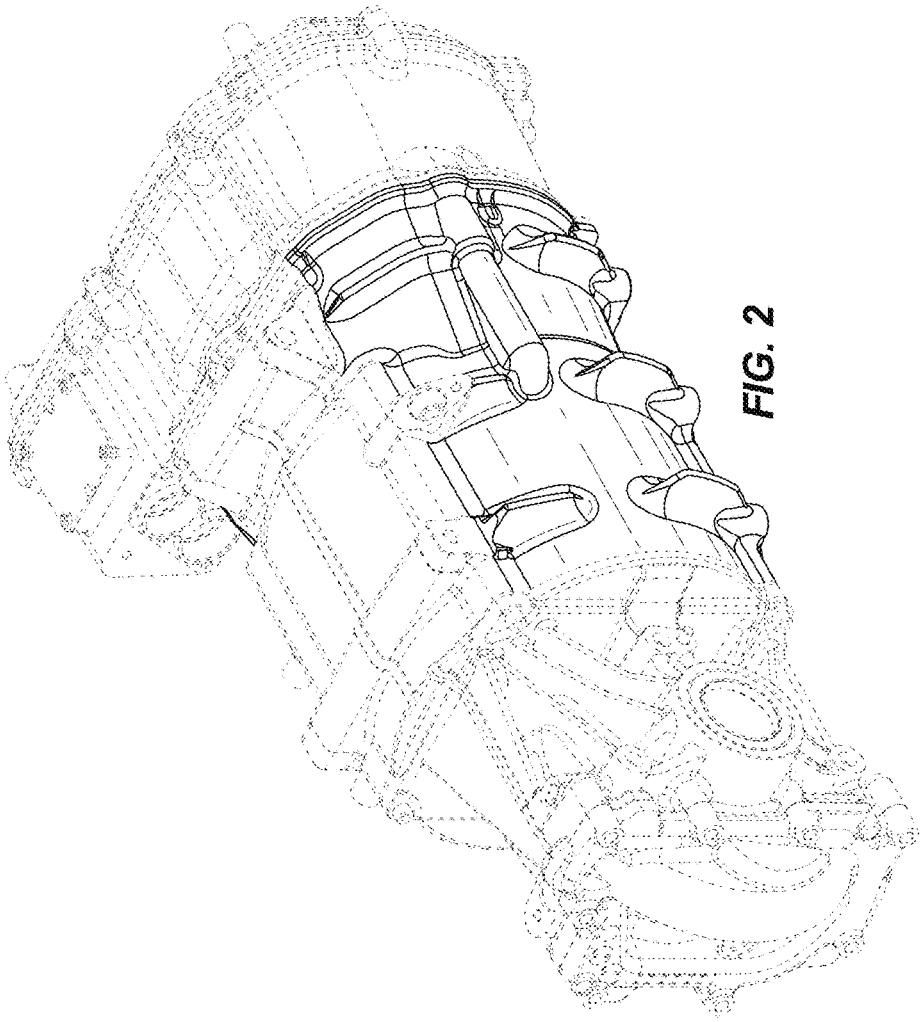

FIG. 2

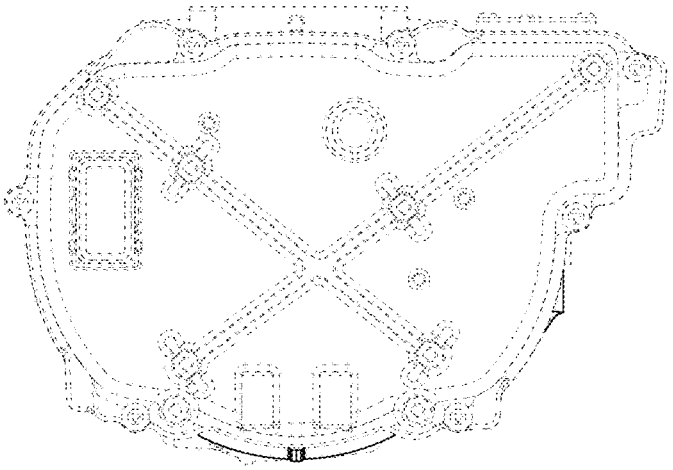

FIG. 3

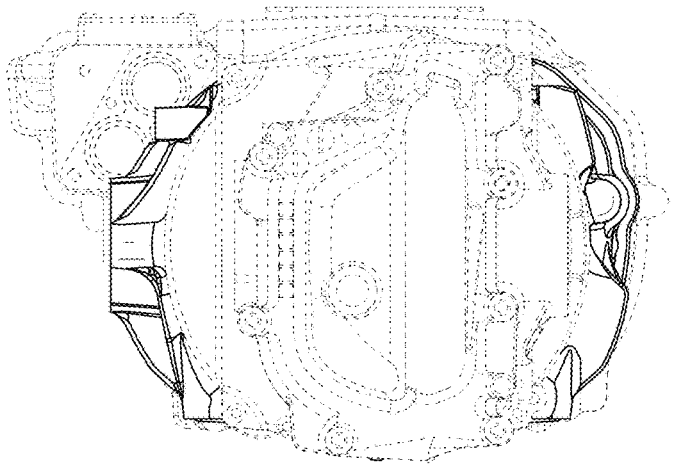

FIG. 4

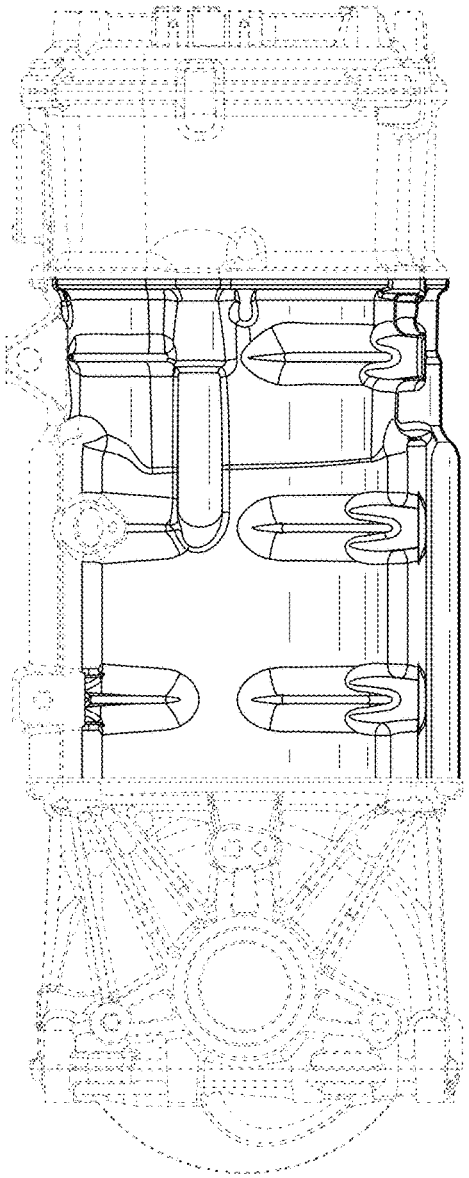

FIG. 5

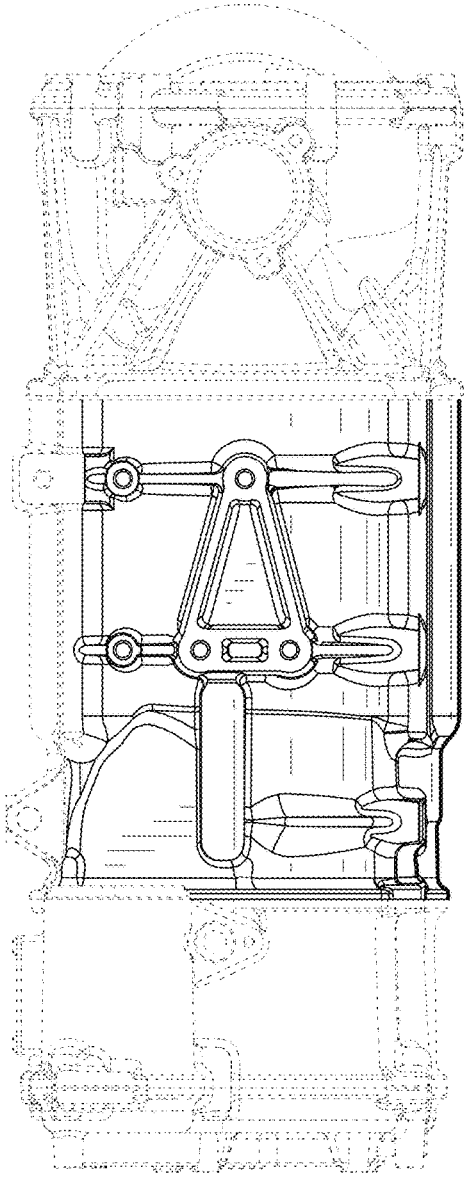

FIG. 6

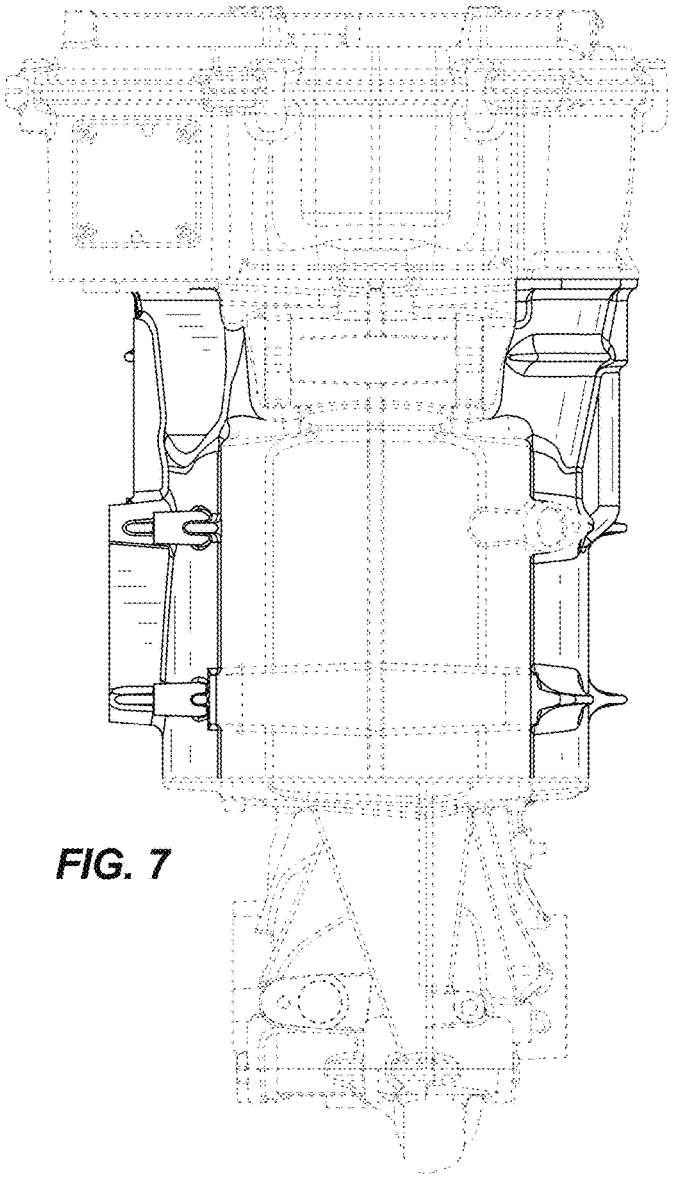

FIG. 7

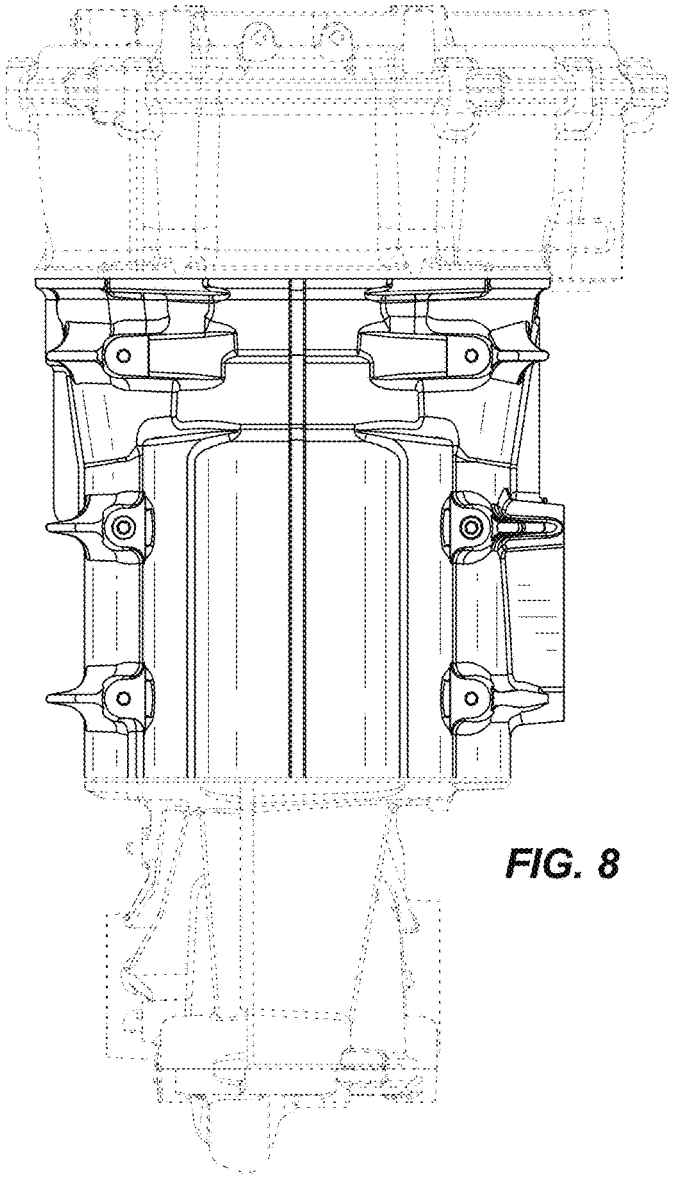

FIG. 8

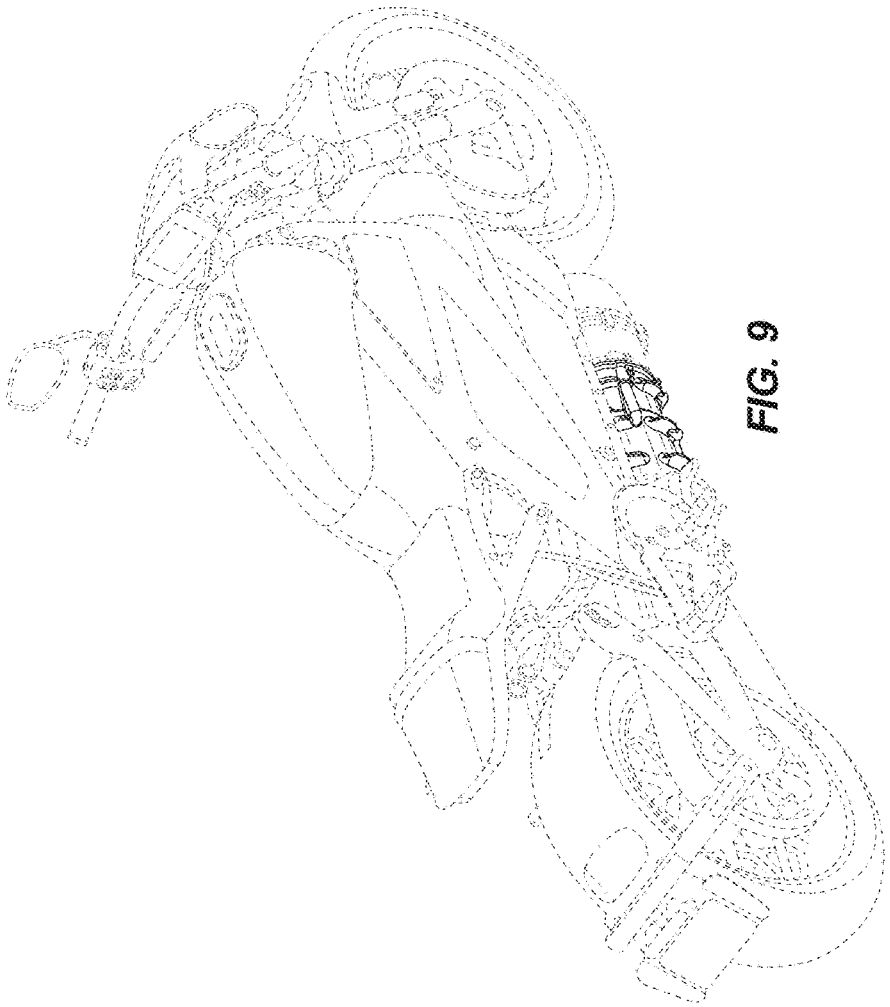

FIG. 9