Dec. 8, 1936. E. E. EHRLICH 2,063,234

TAKE-UP DEVICE

Filed June 1, 1931 2 Sheets-Sheet 1

Fig. 1.

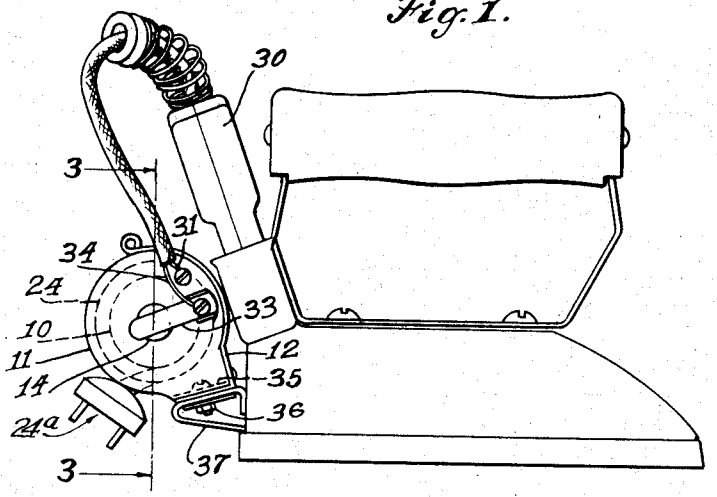

Fig. 2.

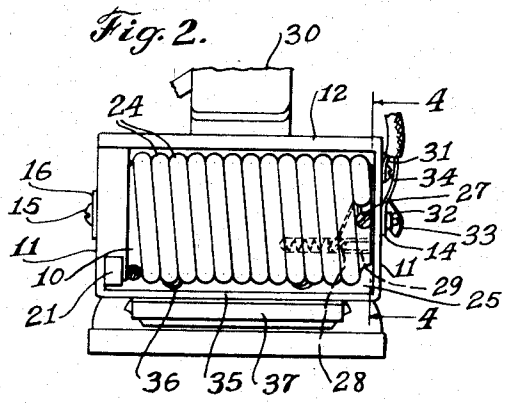

Fig. 3.

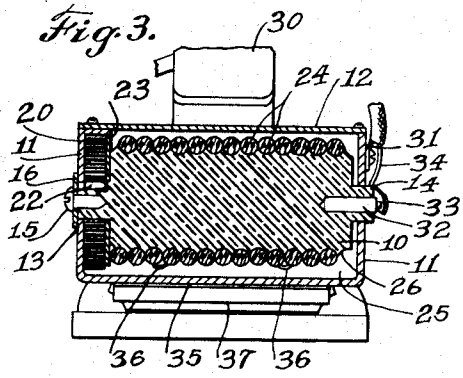

Fig. 10.

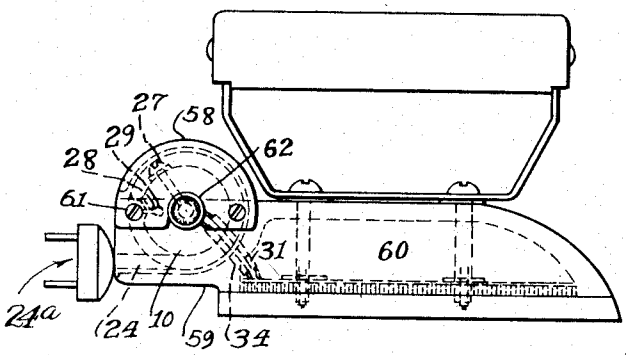

Fig. 4.

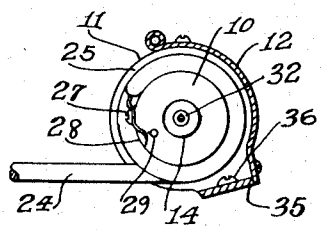

INVENTOR

Emil E. Ehrlich

BY ATTORNEYS.

Schechter & Lotsch

Dec. 8, 1936. E. E. EHRLICH 2,063,234

TAKE-UP DEVICE

Filed June 1, 1931 2 Sheets-Sheet 2

Fig. 5.

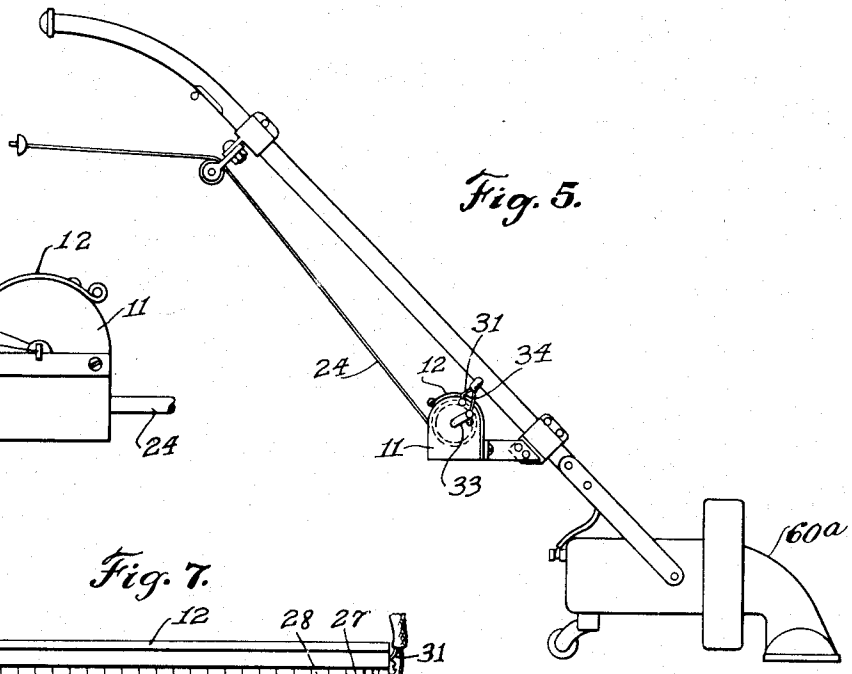

Fig. 6.

Fig. 7.

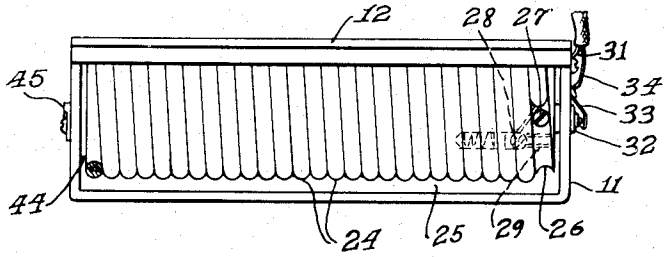

Fig. 9

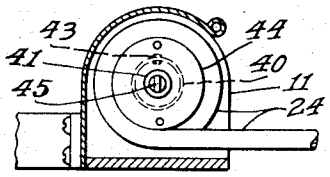

Fig. 8.

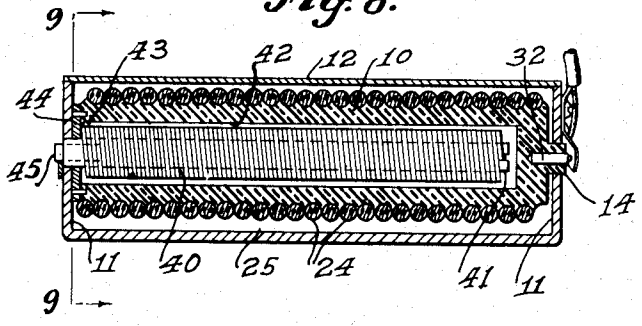

INVENTOR

Emil E. Ehrlich

BY his ATTORNEYS

Schechter & Lobel

Patented Dec. 8, 1936 2,063,234

UNITED STATES PATENT OFFICE

2,063,234

TAKE-UP DEVICE

Emil E. Ehrlich, Tampa, Fla.

Application June 1, 1931, Serial No. 541,283

2 Claims. (Cl. 173—367)

It is among the objects of the present invention to provide a novel and improved take-up device particularly adapted for household electrical appliances.

A further object of the present invention is to provide a take-up device including a cylindrical winding mandrel and spring actuating means therefor.

A further object of the present invention is to provide a take-up device including an elongated cylindrical mandrel having cord receiving and guiding means therefor.

Another object of the present invention is to provide in a device of the character set forth an improved mandrel and helical spring assembly therefor.

A further object of the present invention is to provide in a take-up unit a novel casing and attaching base therefor.

A further important object of the present invention is to provide in a take-up for electrical conducting cords improved electrical connections therefor. This object of the present invention is accomplished by the provision of an insulating mandrel together with electrical connections therethrough.

Another object of the present invention is an arrangement whereby the proposed take-up device can be made an integral part of whatever operating device it is combined with.

Numerous other objects of the present invention will be apparent from a consideration of the following specification taken in conjunction with the accompanying specification in which—

Fig. 1 is a side elevation of one form of the present invention as applied to an electric iron;

Fig. 2 is a rear elevation of the iron shown in Fig. 1 with the take-up in position thereon;

Fig. 3 is a longitudinal vertical sectional view taken on lines 3—3 of Fig. 1;

Fig. 4 is a transverse vertical sectional view taken on lines 4—4 of Fig. 2;

Fig. 5 is a view of a modification of the invention shown as applied to an electric vacuum cleaner;

Fig. 6 is a detail side elevation of the device shown in Fig. 5;

Fig. 7 is a rear elevation of the device shown in Figs. 5 and 6;

Fig. 8 is a vertical longitudinal section of the device shown in Fig. 7;

Fig. 9 is a vertical transverse section taken on lines 9—9 of Fig. 8;

Fig. 10 is a modification of the invention showing the housing cast integral with the body of an electric iron.

Referring more particularly to Figs. 1 to 4, inclusive, of the drawings, it will be seen that the form of the invention therein illustrated includes a mandrel 10 formed of insulating material such as glass, bakelite or the like. The mandrel 10 is journaled through the ends 11 of a casing 12 by the provision of extending pintles 13 and 14 which extend through bearing apertures in the ends 11. For insuring the proper journaling of the mandrel in the ends 11, the pintle 13 is provided with a screw 15, the head of which extends through its end and secures a washer 16 against the outer face of the end so as to retain the mandrel in proper position. It will be readily seen that the arrangement is such that the mandrel is free to turn in either direction within the casing 12.

For normally urging the rotation of the mandrel 10 in a predetermined winding direction, a flat helical spring 20 is provided. The outer end of the spring 20 is secured as at 21 (see Fig. 2) to the casing 12 while the inner end is secured to an inner extension of the pintle 13 as by the reception therein of the inner turned end 22 of the spring. The adjacent end 11 of the casing forms one side of the spring chamber while a plate 23 is provided on the inner side of the spring. The arrangement is clearly such that the spring acts to normally urge the mandrel in a predetermined winding direction and against the unwinding rotation which will be imparted to the mandrel by an associated electrical cord 24 as will be hereinafter discussed.

For receiving the electrical cord 24 upon the mandrel the rear of the casing 12 is open as at 25. For guiding the cord for winding upon the mandrel so as to prevent a double winding of the cord thereon, the mandrel is provided with a helical surface groove 26 which extends from one end of the mandrel to the other and forms a receiving recess whereby the cord will lie in parallel adjacent convolutions upon the mandrel.

The electrical cords usually used in household appliances are of the two conductor type here shown. For connecting the cord 24, which comes from the electrical wall plug 24a, to the mandrel 10 whereby the mandrel will rotate with movement of the cord, a screw 27 is provided which is formed of copper or other suitable conducting medium. One of the conductors of the cord is secured to the screw 27 and is electrically connected therewith. The other conductor of the cord is electrically connected by a conducting screw 28 with a spring urged electrical conducting plunger 29, the arrangement being such that regardless of the rotated position of the mandrel the latter conductor is at all times grounded to the end plate by contact therewith of the plunger 29.

The grounded end plate 11 is adapted to be associated with the iron by any suitable permanent or removable connecting means, the conventional plug 30 for the ironer or other oper-

ating device and conductor 31 being here shown for that purpose. For electrically associating the other conductor with the iron its attaching screw 27 contacts with a central longitudinal pin 32, the end of which extends through the pintle 14 and contacts with a fixed brush 33 which establishes electrical connection therethrough and with a conductor 34 of the plug 30.

The assembly of the first form of the invention is completed by the provision of an attaching base 35 which extends from the casing 12 and which may be secured by screws 36 to the conventional heel rest 37 of the iron.

The operation of this form of the invention will be readily understood. As the cord 24 is withdrawn from the mandrel, the mandrel turns against the tension of the spring 20. Thus the spring acts at all times to take up slack in cord. The electrical connections are such that movement of the cord or mandrel will not disturb the electrical connection to the plug 30. When return movement of the iron takes place, the spring 20 winds the cord upon the rotating mandrel while the groove 26 directs the cord for proper parallel convolution windings thereon. It will be seen that the mounting structure is such that the device may be readily applied to or removed from a conventional iron.

Referring more particularly to Figs. 5 to 9 of the drawings, it will be seen that the device may readily be modified for use with various other types of electrical apparatus. The form of the invention therein illustrated includes the mandrel 10, ends 11, casing 12, etc., of general form as that hereinbefore described. Like numerals represent like parts and thus needless repetition of detail structure is avoided.

This form of the present invention differs from the previous form in the provision of a tubular coil spring 40 mounted upon a pintle 41, which assembly takes the place of the spring 20 and pintle 13 of the form discussed above. The mandrel 10 of the present form has a longitudinal central bore 42 to receive the spring 40, one end of which is secured to the mandrel as at 43. The bore is closed by a spring confining end plate 44 and the opposite end of the spring is associated with the pintle 41, rotation of which with the mandrel being prevented by a cross pin 45.

In the operation of this form of the invention spring tension is applied to the mandrel between the stationary pintle and the mandrel, the action being substantially identical with that described in connection with the first presented embodiment of the device. It is to be noted that the electrical connections are the same in both instances. Both of these forms of the invention provide the usual plug so that the device can be used on existing devices.

In Fig. 10 I have shown a modified form of my invention in which the lower portion of the take-up reel housing 59 is made as an integral part of the body portion 60 of the iron. Attached to the housing member 59 is a top cylindrical covering 58 which is held in place by the screws 61. In the housing member 59 is a rotary contact 62 which takes the place of the contacts 32 and 33 of Figs. 1, 2 and 3. The cord and reel is otherwise the same as illustrated in the other figures of the drawings and operates substantially as hereinbefore described. This form of the invention is particularly designed as a part of an iron or other instrument which is designed to accommodate the invention.

It is obvious from the description that the modification illustrated in Fig. 10 may also be applied to various other types of electrical apparatus, being cast integral with the main housing, as for instance with the vacuum casing 60a. Likewise it could be combined with a floor polisher or scraper, in fact, it could be used in this manner for a telephone from box to instrument, lamp, toaster, portable drill, curling iron and all portable mechanisms, having loose lengths of electrical cord.

In accordance with the provisions of the patent statutes, I have described the principle of my invention, together with the apparatus which I now consider to represent a practical embodiment thereof, but I desire it understood that my invention is not confined to the particular form of apparatus herein shown and described, the same being merely illustrative, and that the invention can be carried out in other ways without departing from the spirit of my invention. I claim broadly the right to employ all equivalent instrumentalities coming within the scope of the appended claims, and by means of which the objects of my invention are attained, and the new results accomplished, as herein set forth, as it is obvious that the particular embodiments herein shown and described are only some of many that can be employed to attain these objects and accomplish these results.

Having now described my invention, what I claim and desire to secure by Letters Patent, is:

1. A take-up device, forming an accessory part of a manually operated electrical tool, said device comprising a metallic casing, a rotatably journaled spring-urged mandrel within said casing and means on said mandrel for guiding a cord thereon so as to alternately wind it upon and unwind it from said mandrel in adjacent helical turns when the mandrel is rotated, said mandrel including a pair of terminals, accessible from the outside, for providing electrical connections to the manually operated tool, one of said terminals including an axial insulated conducting pintle of said mandrel with an associated stationary brush on said pintle, the other forming a conducting path with the casing and a spring urged conducting pin, extending from the end of the mandrel and adapted to make a rotary frictional contact with said casing.

2. A take-up device for an electric iron having a heel, a heating element and a socket with conductors connecting to said heating element comprising a base plate adapted to be secured to said heel and having its ends turned upwards to form opposite bearing members, a roller mounted in said bearing members, a spring for retrieving said roller, an electric cord leading from a fixed outlet to said roller, a plug with terminals for connecting to the conductors in said socket and means for maintaining a circuit between the terminals of said plug and the conductors of the electric cord.

EMIL E. EHRLICH.