(19) Europäisches Patentamt
European Patent Office
Office européen des brevets

(11) EP 3 526 136 B1

(12) **EUROPEAN PATENT SPECIFICATION**

(45) Date of publication and mention of the grant of the patent:
30.11.2022 Bulletin 2022/48

(21) Application number: **17798351.7**

(22) Date of filing: **12.10.2017**

(51) International Patent Classification (IPC):
B65D 81/26 *(2006.01)* ***B65D 81/22*** *(2006.01)*

(52) Cooperative Patent Classification (CPC):
B65D 81/22; B65D 81/266; B65D 81/268;
Y02W 90/10

(86) International application number:
PCT/US2017/056341

(87) International publication number:
WO 2018/071670 (19.04.2018 Gazette 2018/16)

(54) **DEVICE FOR CONTROLLING HEADSPACE HUMIDITY IN A JAR**

VORRICHTUNG ZUR STEUERUNG DER FEUCHTIGKEIT IN EINEM GLAS

DISPOSITIF DE RÉGULATION D'HUMIDITÉ DANS UN POT

(84) Designated Contracting States:
AL AT BE BG CH CY CZ DE DK EE ES FI FR GB GR HR HU IE IS IT LI LT LU LV MC MK MT NL NO PL PT RO RS SE SI SK SM TR

(30) Priority: **12.10.2016 US 201662407269 P**

(43) Date of publication of application:
21.08.2019 Bulletin 2019/34

(73) Proprietor: **Boveda Inc.**
Minnetonka, Minnesota 55343 (US)

(72) Inventors:
- **ESSE, Robert L.**
  Monticello
  Minnesota 55362 (US)
- **BOHRER, Timothy H.**
  Oregon
  Illinois 61061 (US)
- **ANDERSON, Rob**
  Andover
  Minnesota 55304 (US)

(74) Representative: **Hartley, Lucinda Jane**
Hargreaves Elsworth
26 Northumberland Square
North Shields, Tyne&Wear NE30 1PW (GB)

(56) References cited:
EP-A1- 0 531 075 **EP-A2- 0 657 277**
FR-A1- 2 620 685 **US-A- 5 019 212**
US-A1- 2005 172 814 **US-A1- 2014 270 581**

Note: Within nine months of the publication of the mention of the grant of the European patent in the European Patent Bulletin, any person may give notice to the European Patent Office of opposition to that patent, in accordance with the Implementing Regulations. Notice of opposition shall not be deemed to have been filed until the opposition fee has been paid. (Art. 99(1) European Patent Convention).

Processed by Luminess, 75001 PARIS (FR)

Description

FIELD OF THE INVENTION

[0001] The present disclosure relates to the preservation of substances and objects sensitive to humidity, such as particular foods, pharmaceuticals, and herbs. Particularly, the present disclosure relates to devices for controlling the relative humidity within consumer product packages, and methods for making such devices.

BACKGROUND OF THE INVENTION

[0002] For many packaged products, including packaged consumer products, it is beneficial to maintain a particular moisture content of the product and/or within the package containing the product. In some cases, the space within a product package that is not taken up by the product itself, may be referred to as the headspace of the packaged product. Some devices are configured to help maintain a consistent relative humidity (RH) of the headspace of packaged products. The RH may be maintained at a level or range deemed optimum for the particular packaged product. It is understood to those skilled in the art that the %RH in the package headspace will result in a % by weight product moisture content, but that the %RH in the headspace and the product % moisture by weight are different values that differ based on the characteristics of the product and its propensity to absorb moisture from the surrounding atmosphere. Many products may be consumed or utilized by a consumer over a period of time, and maintaining a consistent RH may help preserve the life, integrity, freshness, flavor, or other features of the product.

[0003] One commonly used device for controlling headspace RH in packaged products is a loose pouch containing a salt solution. As disclosed in U.S. Pat. No. 5,936,178, entitled Humidity Control Device, and filed June 10, 1997, the RH of closed environments can be stabilized by the use of humidity control systems comprised of moisture permeable pouches containing specific salt solutions. However, a growing number of existing and potential customers have indicated that the method of providing the humidity control feature through pouches that are loose in the product package is unsatisfactory, and they refuse to, or are prevented from, using this standard approach for a variety of reasons. For example, consumer confusion may arise as to whether the packet is something other than a humidity control device. In some cases, loose packets may be intentionally or mistakenly discarded by consumers when opening and closing the product packaging, particularly with repeated opening and closing of the packaging over time. Such approaches may also require specialized materials.

[0004] EP0531075 discloses a moisturising element for use in in a tobacco pouch. The moisturising element is sealed from the tobacco by a vapour permeable liquid barrier.

[0005] FR2620685 discloses a liner bag for a container, the liner bag having a plurality of packages containing desiccant material attached to the inner surface of the bag.

[0006] US2005172814 discloses a bottle cap fitted with a porous membrane retaining a desiccant.

[0007] Obvious remedies, such as spot gluing pouches to an inside surface of the product package, while easy to implement, have also been deemed by manufacturers or distributors to be unsatisfactory, and in some cases, a product package of that type runs afoul of regulatory requirements for certain products in certain jurisdictions.

[0008] Thus, there is a need in the art for a new humidity control device and methods of making such devices. More particularly, there is a need for a humidity control device that may be integral with the product packaging so as to overcome the potential issues associated with loose humidity control packets.

BRIEF SUMMARY OF THE INVENTION

[0009] The present invention is a product package having a jar and a lid as defined in the appended claims.

BRIEF DESCRIPTION OF THE DRAWINGS

[0010] While the specification concludes with claims particularly pointing out and distinctly claiming the subject matter that is regarded as forming the various embodiments of the present disclosure, it is believed that the invention will be better understood from the following description taken in conjunction with the accompanying Figures, in which:

FIG. 1A is a cross sectional view of a humidity control device of the present disclosure, according to one or more embodiments.

FIG. 1B is a top view of a base layer and humidity control agent of a humidity control device of the present disclosure, according to one or more embodiments.

FIG. 1C a side internal view of a humidity control device of the present disclosure, according to one or more embodiments.

FIG. 1D is a perspective view of a humidity control device of the present invention arranged on an inner surface of the lid of a product package, according to one or more embodiments.

FIG. 1E is a perspective view of a humidity control device of the present disclosure arranged on an inner surface of a product package, according to one or more embodiments.

FIG. 1F is a top view of a humidity control device of the present disclosure arranged on an inner surface of another product package, according to one or more embodiments.

FIG. 2 is a schematic view of a process for manufacturing a humidity control device of the present dis-

closure, according to one or more embodiments.

FIG. 3 is a schematic view of a process for manufacturing a humidity control device of the present disclosure, according to one or more embodiments.

FIG. 4 is a schematic view of another process for manufacturing a humidity control device of the present disclosure, according to one or more embodiments.

FIG. 5 is a schematic view of a process for manufacturing a humidity control device of the present disclosure, according to one or more embodiments.

FIG. 6 is a flow diagram of a method of manufacturing a humidity control device of the present disclosure, according to one or more embodiments.

DETAILED DESCRIPTION

[0011] The present disclosure relates to novel and advantageous humidity control devices for consumer products and methods for making the same. Particularly, the present disclosure relates to novel and advantageous humidity control devices, such as packets, pockets, or other shapes or devices, containing a humidity control agent for controlling the relative humidity (RH) within a packaged consumer product, such as a food, pharmaceutical, herb, or any other suitable consumer product. In some embodiments, the humidity controlling device may be attached to, or integrated with, the product packaging. For example, the device may be fixedly or removably adhered to an inside wall of a product package. In some embodiments, the device may be constructed or formed on the product packaging material, such that the device is an integral part of the product packaging material. In other embodiments, the humidity control device may be freely moveable within the product package, or within a portion of the interior of the product package, for example.

[0012] A humidity control device of the present disclosure may generally include a humidity control agent, which may be a solid, dispersion, emulsion, gel, or saturated or unsaturated solution, contained within a relatively secure and durable containment. The humidity control device may be configured to create and/or maintain a RH within a product package throughout the life of the product, or at least a portion of the life of the product, including through multiple openings and reclosings of the product package by a consumer. In some embodiments, the humidity control device may generally include two layers of material, such as a base layer and a permeable layer, between which the humidity control agent is sealed. The permeable layer may generally allow gases and/or water vapor to penetrate the device such that the humidity control agent may control humidity of the headspace within a product package. In some embodiments, the base layer of the humidity control device may be fixedly or removably arranged on or adhered to an inner surface of a product package. In other embodiments, the base layer may be or include an inner wall of a product package, such that the permeable layer may generally hold the humidity control agent against the product package material. In other embodiments, the humidity control device may include a different configuration with a humidity control agent arranged within or between one or more layers of material. One or more surfaces of the device may be permeable to gases and/or water vapor such that the humidity control agent may control humidity of the headspace within a product package. The device may be fixedly or removably adhered to an inner surface of a product package, or may be freely placed within a product package.

[0013] Turning now to FIG. 1A, a humidity control device 100 of the present disclosure is shown. As shown, the device 100 may include a humidity control agent 120 arranged between a base layer 110 and a permeable layer 130. The humidity control device 100 may generally have any suitable size and shape configured to be arranged within a product package and to accommodate a desired and effective quantity of a humidity control agent 120. That is, the humidity control device 100 may have any suitable width, length, and thickness, for example. In some embodiments, the humidity control device 100 may have a width of between less than 2.54cm (1 inch) and approximately 40.64cm (16 inches). In particular, the humidity control device 100 may have a width of between approximately 1.27cm (0.5 inches) and approximately 30.48cm (12 inches). The humidity control device may have a width of less than 2.54cm (one inch) and approximately 50.8cm (20 inches). In particular, the humidity control device 100 may have a length of between approximately 2.54cm (1 inch) and approximately 35.56cm (14 inches). In one embodiment, for example, the humidity control device 100 may have a width of approximately 5.08cm (2 inches) and a length of approximately 7.62cm (3 inches). In another embodiments, the humidity control device 100 may have a width of approximately 2.54cm (1 inch) and a length of approximately 5.08cm (2 inches). In yet another embodiment, the humidity control device 100 may have a width of approximately 20.32cm (8 inches) and a length of approximately 25.4cm (10 inches). In still other embodiments, the humidity control device 100 may have other suitable dimensions configured to provide a desired RH in a product package having a particular size and shape. The humidity control device 100 may have a thickness of between approximately 0.0254cm (0.01 inches) and approximately 2.54cm (1 inch) in some embodiments. In particular, the humidity control device 100 may have a thickness of between approximately 0.0625cm (0.025 inches) and approximately 1.27cm (0.5 inches), or between 0.127cm (0.05 inches) and 0.254cm (0.1 inches). While a rectangular humidity control device 100 is depicted in FIG. 1A, the humidity control device may have any suitable shape and dimensions.

[0014] The humidity control agent may be comprised of a solid, a dispersion, an emulsion, a gel, or a saturated or unsaturated aqueous solution comprised of a salt, sug-

ar, polyol such as glycerin or propylene glycol, mannitol, sorbitol, xylitol, amino acid, or other solute modulating the relative humidity. For example, in some embodiments, the humidity control agent may be or include a saturated or unsaturated salt solution, such as those described in U.S. Patent No. 9,750,811, entitled Devices and Methods for Controlling Headspace Humidity and Oxygen Levels, filed September 15, 2015; U.S. Patent No. 5,936,178, entitled Humidity Control Device, filed June 10, 1997; and/or U.S. Patent No. 6,921,026, entitled Preservation of Intermediate Moisture Foods by Controlling Humidity and Inhibition of Mold Growth, filed February 5, 2002. In other embodiments, other suitable materials for controlling humidity may be used as the humidity control agent 120. The humidity control agent 120 may allow for one-way or two-way humidity control in some embodiments. That is, the humidity control agent 120 may be configured to remove moisture from the air and/or to add moisture to the air. In some embodiments, one or more additives may be combined with the humidity control agent, including but not limited to the additives described in U.S. Patent Application No. 14/854,159, U.S. Patent No. 5,936,178, and/or U.S. Patent No. 6,921,026. For example, some additives may be used to increase or otherwise control viscosity levels of the humidity control agent. One example of an additives one or more gums for thickening or altering viscosity of the humidity control agent. For example, in some embodiments, between approximately 1% and approximately 3% of the humidity control agent may comprise one or more gums. Other additives may include one or more salts, water, and/or other additives.

[0015] The quantity of humidity control agent 120 contained within the humidity control device 100 may vary based on desired RH control capacity, size of product package, and/or other factors. The quantity of humidity control agent 120 may vary from, for example, less than 1 gram to more than 500 grams of material for each humidity control device 100. In some embodiments, the humidity control device 100 may have a quantity of humidity control agent 120 ranging from between approximately 1 gram and approximately 350 grams. In particular embodiments, the quantity of humidity control agent 120 may range between approximately 2 and 8 grams, between approximately 4 and 16 grams, between approximately 57 and 77 grams, or between approximately 300 and 340 grams. In some embodiments, the quantity of humidity control agent 120 may correspond or relate to the quantity of product in the product package, and/or the size of the product package. For example, in some embodiments, the humidity control agent 120 for the humidity control device 100 may be provided in a ratio of between 1:2 and 1:20 to the amount of product in the product package. In particular, the ratio between the amount of humidity control agent 120 and the amount of product in the product package may be between approximately 1:4 and 1:12, or between 1:6 and 1:10. In other embodiments, other ratios of humidity control agent 120 to product in the product package, or to size of product package, may be provided.

[0016] It is to be appreciated that the humidity control material 120 may be applied over a "footprint" or a particular area of the base layer. Moreover, the humidity control material 120 may be applied with a desired thickness. It may be advantageous to achieve a workable balance between the footprint of the humidity control agent 120 on the base layer 110, and the thickness of the humidity control agent, in order to achieve a desired level of humidity control and desired size and shape of the humidity control device. Too large a footprint of the humidity control material 120, while reducing humidity control device 100 thickness, may increase width, length, or other dimension(s) of the device and thus require more base layer 110 and permeable layer 130 materials. This may increase material cost for the added permeable material and base material as well as require more product packaging interior space for the humidity control device 100, which may in turn lead to difficulties in forming and/or sealing the packaging. However, a relatively small footprint of the humidity control agent 120, while reducing other dimensions of the humidity control device 100, may lead to a relatively thick humidity control device, and may interfere with forming product packages and filling them.

[0017] The base layer 110, as shown in FIG. 1A, may generally be configured to couple or adhere to the permeable layer 130 so as to contain the humidity control agent 120, and may include one or more materials arranged in one or more layers. In some embodiments, the base layer 110 may be substantially impermeable to water vapor and/or gases. The base layer 110 may be rigid, semi-rigid, or flexible. In some embodiments, the base layer 110 may include materials such as, but not limited to, printed or unprinted paper or paperboard-based material, a polyester material such as a heat seal polyester film for example, an oriented film, such as polyester, polypropylene, or nylon, single layer or coextruded layer films made from polyolefins (LDPE, LLDPE, HDPE, PP, copolymers, other variations, or blends thereof), a barrier resin such as EVOH, a barrier material such as thin vapor deposited coatings comprised of, for example, metal(s), metal oxide(s), metalloid(s), metalloid oxide(s), or one or more of a wide range of organic materials. As is known to those of ordinary skill in the art, materials for use as a base layer 110 may be chosen for a variety of properties, including liquid, vapor, or gas barrier, printability, stiffness, sealability, or other properties. In some embodiments, the base layer 110 may be or include generally flexible and/or foldable materials, such as paperboard or foldable plastic. Rigid or semi-rigid substrates with similar material compositions may additionally or alternatively be used as base layer 110 materials.

[0018] In some embodiments, the base layer 110 may be configured to fixedly or removably adhere to an inner surface of a product package or a component thereof. For example, the base layer 110 may have an adhesive backing for adhering to an inner wall of a carton, cup,

canister, box, pouch, jar, case, bag, or other product package. In other embodiments, the base layer 110 may be glued or otherwise adhered to an inner product package surface using any suitable means. In still further embodiments, the base layer 110 may be or include an inner surface of a product package. For example, the base layer 110 may be or include an inner wall of a carton, cup, canister, box, pouch, jar, case, bag, or other product package, such that the permeable layer 130 may hold the humidity control agent 120 directly on or against the product package wall. In one embodiment, the base layer 110 may be or include an inner surface of a paperboard box configured to hold dry food goods, for example, such that the permeable layer 130 may be configured to form a seal with the inner surface of the paperboard box so as to contain the humidity control agent 120 while permitting gas exchange through the permeable layer. In such embodiments where the base layer 110 comprises an inner surface of a product package, the product package itself may be preassembled before receiving the humidity control agent 120 and permeable layer 130, or may be assembled after receiving the humidity control agent and permeable layer.

[0019] In some embodiments, the base layer 110 may have an adhesive surface for adhering to the permeable layer 130. For example, the base layer 110 may have a patterned adhesive side-that is, a side having adhesive on select locations or areas-configured to provide an adhesive surface for adhering to the permeable layer 130 without interfering with the humidity control agent 120. FIG. 1B shows an example of a base layer 110 having an adhesive surface 112 providing a perimeter around an area of the base layer configured to receive the humidity control agent 120. As shown, in some embodiments, the adhesive surface 112 may generally form a perimeter or border around the humidity control agent 120, such that the permeable layer 130 may be arranged over the humidity control layer and may bond to the base layer 110 via the adhesive surface, so as to hold the humidity control agent between the two layers. It may be appreciated that the adhesive surface 112 may be arranged in generally any suitable pattern or configuration on the base layer 110 and/or permeable layer 130. In other embodiments, as described further below, other mechanisms may be used additionally or alternatively to adhere the permeable layer 130 to the base layer 110.

[0020] The permeable layer 130 may generally be configured to couple or adhere to the base layer 110 so as to contain the humidity control agent 120, and may include one or more materials arranged in one or more layers. The permeable layer 130 may generally be permeable to water vapor and/or oxygen or other gases, allowing water vapor and/or oxygen or other gases to flow through the layer without allowing the humidity control agent 120 to flow through the permeable layer. It may thus be appreciated that the permeable layer 130 may be impermeable to aqueous solutions, such as saturated or unsaturated salt solutions used as a humidity control agent 120 in some embodiments. In other embodiments, for example where the humidity control agent 120 is a gel or a liquid with a relatively high viscosity, the permeable layer 130 may be configured to be impermeable to gels or liquids having a minimum viscosity. The water vapor transport, known as water vapor transmission rate (WVTR) is measured in terms of grams of water passed per 645 square cm (100 square inches) of material per 24 hours under standard test conditions. WVTR is generally a function of the type and thickness of materials used.

For a humidity control device of the present disclosure, the total moisture transferred may be determined by the area of the permeable layer 130 exposed to a humidity control material in a given application. In some embodiments, for example, a WVTR of about 1-120, or about 5-100, about 10-85, or about 10-60 grams of water per 100 square inches over 24 hours may provide relatively good results for a device in accordance with the invention. In other embodiments, a different WVTR may be used.

[0021] Materials that may be employed for the permeable layer 130 may include, but are not limited to, a polymeric film, fibrous polyethylene (TYVEK®) or other nonwoven structures, polyesters such as an elastomer, or polyamide Pebax laminated onto a suitable substrate such, but not limited to, as paper. In some embodiments, a thermoplastic polyester elastomer may be used as or with the permeable layer 130. Such thermoplastic polyester elastomer materials may offer a combination of relatively high water vapor permeability, resistance to solutions, such as salt solutions for example, toughness, and the ability to create relatively strong and robust seals with itself. Other materials that may be used as or included with the permeable layer 130 may include, but are not limited to, paper, foil, polyesters, metalized polyesters, copolyesters, polyolefins, copolymers, polyurethanes, polylactic acid, and/or other suitable materials. In some embodiments, the permeable layer 130 may be or include a microperforated material or any other suitable material configured to maintain the humidity control agent 120 at static and/or dynamic pressures encountered during product filling, distribution, storage, and customer use of the packaged product.

[0022] Turning now to FIG. 1C, another humidity control device 105 of the present disclosure is shown. In some embodiments, the humidity control device 105 may include a packet or pouch 140 containing a humidity control agent 120. In some embodiments, the humidity control device 105 may be constructed of a piece of material folded and secured to form the pouch 140. An adhesive, heat sealing, and/or other securing mechanisms may be used to seal one or more sides of the pouch 140. The humidity control device 105 may generally have any suitable size and shape configured to be arranged within a product package and to accommodate a desired and effective quantity of a humidity control agent 120. That is, the humidity control device 105 may have any suitable width, length, and thickness, including but not limited to

the dimensions described above with respect to the humidity device 100. While a rectangular humidity control device 105 is depicted in FIG. 1C, the humidity control device may have any suitable shape.

[0023] The packet or pouch 140 may comprise any suitable material or materials in any suitable number of layers. In some embodiments, the packet 140 may have one or more sides or faces. For example, as shown in FIG. 1C, the packet may have four sides. In other embodiments, the packet may have two sides, six sides, any other suitable number of sides, or may have, for example, a rounded or curved shape. One or more sides or faces of the packet 140 may be or include an oxygen and/or water vapor permeable material, as described above with respect to the permeable layer 130, such that the humidity control agent 120 may control humidity of the headspace within a product package. In some embodiments, the packet 140 may be mostly or entirely composed of a gas and/or liquid permeable material. That is, for example, a sheet of permeable material may be folded and secured to form the pouch 140. In other embodiments, one or more surfaces or sides of the packet 140 may be generally impermeable to water vapor and/or oxygen or other gases. The one or more sides or faces of the packet 140 may generally be rigid, semi-rigid, or flexible. The one or more sides or faces of the packet 140 may be sealed together using any suitable adhesive or coupling means so as to maintain the humidity control agent 120 within the packet. In some embodiments, the packet 140 may be configured to couple to a product package, such as an inner wall of a product package. For example, one or more surfaces or sides of the packet 140 may have or may be configured to receive an adhesive, such as a heat-activated and/or hot-melt type adhesive in some embodiments.

[0024] The packet 140 may generally be configured to control humidity within a product package. In some embodiments, the packet 140 may be configured to be fixedly or removably adhered to an inner surface of a product package. For example, the packet 140 may have an adhesive surface in some embodiments, such that it may be fixedly or removably adhered to an inner wall of a paperboard box, as an example. In other embodiments, the packet 140 may be glued or otherwise adhered to an inner surface of a product package using any suitable means. In other embodiments, the packet 140 may be configured to be loose within a product package, such that it may generally move around within the package.

[0025] As described above, a humidity control device of the present disclosure may be adhered to or incorporated on an inner surface of a product package. FIG. 1D shows the present invention, where a product package includes a jar having a lid 160 and a humidity control device 150 is adhered to an inner surface of the lid. According to the invention, the humidity control device 150 is adhered to the lid 160 using any suitable adhesive and the inner surface of the lid 160 acts as a base layer 110 of the humidity control device 150, such that a permeable layer 130 may maintain a humidity control agent 120 between the permeable layer and lid. FIG. 1E shows another example of the present disclosure, where a product package may include a paperboard, cardboard, or other material box 170. The dashed circle of FIG. 1E shows an internal view into the box 170 wherein a humidity control device 150 is adhered to an inner surface of the box. The humidity control device 150 may be adhered to the box 170 using any suitable adhesive in some embodiments. In other embodiments, the inner surface of the box 170 may act as a base layer 110 of the humidity control device 150, such that a permeable layer 130 may maintain a humidity control agent between the permeable layer and box. For example, where the inner surface of the box 170 has a coating, lamination, or other application of a relatively impermeable material, such material may function as a base layer 110. The box 170 may be a product package, or part of a product package, and may be configured to receive a consumer product, such as a food product, tobacco product, or other product. The humidity control device 150 may help to control humidity within the headspace of the box 170.

[0026] FIG. 1F illustrates one example of a pre-assembly product package 180 having a humidity control device 150 arranged thereon. The product package 180 may be a flexible plastic and/or paper pouch, for example. In some embodiments, the product package 180 may comprise a sheet of material configured to be folded into a pouch shape. The sheet of material may have one or more fold lines 182 and one or more panels 184, for example. The material may have a surface 183 configured to be an inner surface of the pouch 180. The material may be configured to be folded at the fold lines 182, and sealed at one or more edges 186, so as to form the pouch shape. In some embodiments, the material may be configured to receive a zip closure 188 or other closure mechanism to facilitate an initial opening of the pouch 180, or alternatively repeated openings and closings of the pouch. The humidity control device 150 may include a humidity control agent 120 and a permeable layer 130 arranged on the pouch 180 material, so as to be arranged on the inner surface 183 of the pouch. In this way, the inner surface 183 of the pouch 180 may operate as a base layer for the humidity control device 150, and may be configured to receive the humidity control agent 120 and the permeable layer 130. In some embodiments, the humidity control agent 120, as described herein, may be deposited directly onto a panel 184, or another portion, of the preassembled pouch 180. In other embodiments, the humidity control agent 120 may be deposited after assembly or partial assembly of the pouch 180. The permeable layer 130 may be arranged over the humidity control agent 120 and may be adhered or fixed to the inner surface 183 of the pouch 180. In some embodiments, as described above, an adhesive, such as a hot melt adhesive, may be used to form a perimeter around the humidity control agent 120 to adhere the permeable layer 130 to the inner surface 183. In this way, the hu-

midity control agent 120 may be maintained between the inner surface 183 and the permeable layer 130. In some embodiments, once the humidity control agent 120 is applied and the permeable layer 130 is adhered, the pouch 180 may be folded, sealed, or otherwise assembled. The pouch may be partially sealed such that it is configured to receive a product, such as but not limited to tobacco, cannabis, a food product, or another product.

[0027] Turning now to FIG. 2, a process 200 for manufacturing one or more humidity control devices of the present disclosure is shown. As shown, the process 200 may generally include applying a humidity control agent 222 and a permeable layer 232 over a base layer 212 arranged on a conveyer belt 205 or other appropriate means of controllably transporting the base layer, such as one or more rollers, drums, air flotation devices, or other means. The process 200 may include unwinding a roll of base material 210 to form a base layer 212 on a conveyer belt 205, extruding or otherwise dispensing a humidity control agent 222 from an extruder 220 or other dispensing device, unwinding a roll of permeable material 230 to form a permeable layer 232, and applying heat from a heater 240 to seal the permeable layer to the base layer. In some embodiments, the process 200 may include using one or more registration devices 250, 260 to sense one or more registration markers. The process 200 may generally provide for the continuous manufacture of a plurality of humidity control devices that may be cut into discrete units that can include pouches, packets, or their precursor structures before, during, or after the operations depicted in FIG. 2. In some embodiments, the process 200 may include one or more modules to fabricate a variety of packages ready for filling with the intended product. For example, in some embodiments, the process 200 may include folding and partially sealing individual flexible pouches incorporating the humidity control devices of the present disclosure, such as that described above with respect to FIG. 1F, leaving one or more unsealed areas suitable for insertion or filling of product. While the base material and permeable material are described as being on a rolls 210, 230, the materials may generally be in any suitable form, such as sheets or individually pre-cut and/or pre-sized pieces. The conveyer belt 205 or other moving surface may move intermittently or continuously. In some embodiments, a vacuum or other device may operate to hold or pull the base material against the belt 205 or other surface to increase registration precision.

[0028] As shown in FIG. 2, the humidity control agent 222 may be applied in discrete "patches" on the base layer 212 material, each patch surrounded by a perimeter of exposed base layer material. The individual humidity control agent 222 patches may form individual humidity control devices in some embodiments. As described above, the humidity control agent 222 may be a solid, dispersion, emulsion, gel, or saturated or unsaturated solution. In this way, the humidity control agent 222 may be applied to the base layer 212 using different mechanisms based, at least in part, on the medium of the control agent. For example, where the humidity control agent 222 is a solution or other liquid with relatively low viscosity, the base material may have an indented portion configured to receive the humidity control agent, or the base material may have one or more ridges, such as along one or more edges or surrounding an area configured to receive the humidity control agent, so as to contain the humidity control agent in a desired area on the base layer 212. Where the humidity control agent 222 is a solid or gel or other liquid having a relatively high viscosity, the humidity control agent may be simply placed or otherwise applied to the base material without the need for an indentation or ridge(s) in some embodiments. Generally, the humidity control agent 222 may be applied to the base layer 212 using any suitable method. For example, in some embodiments, the humidity control agent 222 may be applied to the base layer 212 via a nozzle assembly having one or more orifices. The agent 222 may be applied in discrete strips, bands, ribbons, or spots of a predetermined quantity and having any suitable size where the agent is viscous, for example. Flow rate of the humidity control agent 222 may be determined by pressure and/or orifice design and size. In some embodiments, the humidity control agent 222 may be applied using a slot orifice dispenser similar to the type used in extrusion of molten polymer or hotmelt-type materials, with the capability of relatively precise control of flow rate and patch length. In other embodiments, the humidity control agent 222 may be applied via screen printing such as, for example, continuous rotary or stop-start flatbed screen printing. Other application techniques, including printing, extruding, painting, or other techniques may be used as well.

[0029] As additionally shown in FIG. 2, the permeable layer 232 may be arranged over the humidity control agent 222 and the base layer 212, thus forming a plurality of discrete humidity control devices. The permeable layer 232 may be applied by various means. For example, in some embodiments, as shown in FIG. 2, the permeable layer 232 may be applied as a continuous layer across the continuous layer of base material having a plurality of discrete patches of humidity control agent 222. In other embodiments, the permeable layer 232 may be applied in distinct sheets or individually pre-cut and/or pre-sized pieces configured to be arranged over each discrete patch of humidity control agent 222. In some embodiments, the permeable layer 232 may be flexible and may be applied such that it may generally drape over each patch of humidity control agent 222 and onto the exposed upper surface of the base layer 212. The permeable layer 232 may be applied such that the permeable material may contact the base material to form a perimeter around each patch of humidity control agent 222. The permeable material may be applied such that it is in substantially complete and smooth contact with the base layer 212, so as to avoid the presence of channels, folds, or gathers in the permeable layer 232.

[0030] In some embodiments, a pocket, bubble, or generally recessed or concave area may be formed in the permeable material before it is placed over the patch of humidity control agent 222 in order to accommodate the humidity control agent 222 and to ensure a smooth contact with the base layer 212 and avoid folds, channels, or gathers. That is, a shallow pocket may be formed in a central region of the permeable material that will directly cover a patch of humidity control agent 222, as shown for example in FIG. 1A. For example, appropriately sized rolls of the permeable material may be fed to a unit that creates the desired pocket in the material and/or cut off individual permeable layer 232 pieces containing pockets for placement over humidity control agent 222 patches. The pocket formation may be done continuously or in intermittent motion; cut off of individual pieces can occur before or after individual pockets are formed; formation done using heat, pressure, matched male/female dies or vacuum into a female die, some combination of one or more of the above, or some other method. The discrete permeable material sections with pockets may then be placed directly over each patch or transferred to another mechanism that places them over each patch. In other embodiments, the permeable layer 232 may be rigid or semi-rigid and may have a recessed area configured to accommodate the thickness of the humidity control agent 222 patch, for example.

[0031] When the permeable material is placed over the patch, due to the viscosity of the humidity control agent 222, contact between the permeable material and patch may beneficially aid in temporarily holding the permeable material in place while the perimeter of the permeable layer 232 is sealed or otherwise adhered to the perimeter of the base layer 212.

[0032] In some embodiments, one or more registration devices 250, 260 may be configured to sense a registration marker. A registration marker may be, for example, a printed indicator printed on the base layer 212 or permeable layer 232, an indicator on the conveyer belt 205 or another surface, or any other visually or electronically detected cue. A registration device 250, 260 may sense a registration marker to determine a condition related to the process 200. For example, a registration marker may indicate whether the humidity control agent 222 is appropriately positioned on the base layer 212, whether the permeable layer 232 is appropriately positioned on the base layer, whether the permeable layer has properly adhered to the base layer, and/or other elements of the process 200. In some embodiments, the one or more registration devices 250, 260 may produce an electronic signal-or cause an electronic signal to be produced-upon detecting a registration marker. Such signals may result in initiating an automated adjustment to a component of the humidity control device or a component of the process, providing an alert to an operator, halting production, making one or more adjustments, or other actions. In some embodiments, one or more automated or partially automated inspection devices may be incorporated into the process 200 or other processes of the present disclosure, providing a defect detection function to increase consistency and/or quality.

[0033] A sealing system 240 may be used to adhere the perimeter of the permeable layer 232 to the exposed perimeter of the base layer 212. For example, the sealing system 240 may include a heater for heat sealing the permeable layer 232 and base layer 212, an ultrasonic welding system, a pressure sealing system, an adhesive application system, and/or other means for bonding the two layers together. In some embodiments, the permeable material and base material may be configured to seal or adhere together, via heat sealing for example. In some embodiments, where the base layer 212 and/or permeable layer 232 are comprised of multiple layers of material(s), one or more of the layers may be sealed or adhered to one or more other layers. In some embodiments, the base layer 212 and/or permeable layer 232 may be pre-treated with, or may include, a bonding material such as an adhesive material or a heat sealable material. In some embodiments, the two materials may be chemically compatible to form heat seals or other seals at particular temperatures, pressure, and/or dwell times. A few examples of such sealant materials are polyethylene and some of its copolymers and ionomers, heat seal coated oriented films such as polypropylene or polyethylene terephthalate, nylon or others polymer types and films. In other embodiments, an adhesive, such as a heat activated adhesive, may be applied to the surface of the base material and/or the perimeter surface of the permeable material that will contact the base material. The adhesive may be applied to an entire surface of the base material and/or permeable material, or may be applied to a perimeter, for example, so as not to interfere with the humidity control agent 222.

[0034] In at least one embodiment, a hot-melt type adhesive material may be applied to the base layer 212 in a molten state. The adhesive material may be applied with a suitable temperature and in a suitable amount such that the adhesive material may be configured to retain sufficient heat to bond the permeable layer 232 to the base layer 212. In some embodiments, the adhesive material may be heated to a temperature of between approximately 250 degrees Fahrenheit and approximately 400 degrees Fahrenheit before being applied to the base layer 212. In some embodiments, the adhesive material may be applied on the base layer 212 to form a continuous perimeter or partial perimeter around the humidity control agent 222. In other embodiments, the adhesive material may be applied to the base layer 212 in a plurality of discrete locations, such as in dots. Where the adhesive material is applied at discrete locations, such as in dots, the application temperature and time between application and contact of the permeable layer 232 may be configured such that as the permeable layer is applied, the adhesive material may be configured to remain above its solidification temperature. In this way, when the permeable layer 232 and suitable pressure are applied, the dis-

crete locations or dots may flow together and form a continuous perimeter or partial perimeter that operates to contain the humidity control agent 222 between the base layer 212 and the permeable layer. The hot-melt type adhesive material may be selected to retain a relatively high degree of tackiness, so as to facilitate maintenance of bonding the two layers through distribution and use of the humidity control device.

[0035] Generally, any suitable method known in the art may be used to strongly and robustly couple the base layer and permeable layer together, creating strong and robust seals capable of performing satisfactorily through the remaining package formation, filling, closing/sealing operations, as well as distribution, storage, sale, and use by the ultimate consumer.

[0036] For example, turning to FIG. 4, in some embodiments, the base layer may be or include an adhesive layer having a pre-applied adhesive configured to bond to the permeable layer. As shown in FIG. 4, the base layer material 510 may have an adhesive surface on the side configured to couple to the permeable layer 532. The adhesive surface may cover an entire side of the base layer 512 or may be arranged in particular areas, such as lining a perimeter of where the humidity control agent 522 is configured to be arranged, as described above with respect to FIG. 1B. In some embodiments, a protective layer 540 may be peeled back from the base layer 512 before the humidity control agent 522 is applied to the base layer. The protective layer 540 may be a layer of material arranged over the adhesive of the base layer material, so as to protect the adhesive surface prior to use. The protective layer 540 may be comprised of a paper material or other suitable material configured to release from the adhesive layer or surface of the base layer 512 without tearing or otherwise being damaged so as to facilitate relatively smooth and event movement of the base layer through the process, for example. In embodiments where the adhesive material is applied to the base layer 512 in particular patterned areas, the protective layer 540 may cover only those patterned adhesive portions of the base layer 512 and thus may be peeled or otherwise removed from the base layer during or after application of the humidity control agent 522.

[0037] As described above, in some embodiments, the base layer of a humidity control device of the present disclosure may be or include a product packaging material, such that the humidity control device may be constructed directly on a material that will ultimately be an inner surface of a product package. As shown for example in FIG. 3, the base layer 412 may be or include a box, such as a paperboard or cardboard box, or a portion thereof, which may be arranged on a conveyer belt 405 or other moving or stationary carrier in an unfolded or otherwise flattened configuration. The humidity control device process 400 may include applying a humidity control agent 422 and permeable layer 432 directly to a surface of the unfolded or flattened box 402, such as a surface that will become an inner surface of the box once it is folded and/or assembled. The humidity control agent 422 may be applied using an extruder 420 or other dispensing device. The permeable layer 432 may be applied by a device 430 configured to cut and/or position the permeable material over the humidity control agent 422 and box 402. The permeable material may then be heat sealed to the box 402 using a heater 440 in some embodiments. In other embodiments, the permeable material may be sealed to the box 402 using a different sealing or coupling means, as described above.

[0038] Turning now to FIG. 5, as described above, a humidity control device of the present disclosure may comprise a packet 602 containing a humidity control agent. FIG. 5 illustrates a process 600 for adding a quantity of humidity control agent to the packet 602 and sealing the packet. As shown, a plurality of packets 602 may be arranged on a conveyer belt 605 or other moving or stationary surface. An extruder 620 or other device may operate to inject a quantity of humidity control agent into each packet. A heater 640 may operably seal two sides or faces of the packet 602 together after the humidity control agent is injected. In other embodiments, other mechanism(s) may be used to close or seal the packet 602, such as those sealing methods described above. One or more registration devices 650 may assist the process 600, as described above.

[0039] A humidity control device of the present disclosure may generally be constructed of materials that not only allow relatively high permeability of water vapor through at least a portion of the containment, but also are sufficiently tough to resist abuse that may otherwise result in the containment rupturing and contaminating the product with the humidity control agent. The humidity control devices of the present disclosure may additionally be constructed economically, such that the devices may be applied to a wide variety of product packaging. The humidity control devices described herein may additionally meet applicable performance standards and requirements.

[0040] As generally described above, and as shown in FIG. 6, a method 700 of manufacturing a humidity control device of the present disclosure may include the steps of supplying a base layer 702; applying a quantity of a humidity control agent to the base layer 704; applying an adhesive to the base layer 706; and applying a permeable layer over the base layer 708. It is to be appreciated that the steps may be performed in generally any suitable order. That is, for example, the adhesive material may be applied to the base layer before or after the humidity control agent is applied. In some embodiments, the method 700 may include additional and/or alternative steps. For example, pressure may be applied to the permeable layer to help it adhere to the base layer via the adhesive.

Example:

[0041] In one particular example, a humidity control device was formed with a base layer, a humidity control

material, and a permeable layer. A base layer of material was constructed with oriented polypropylene having a thickness of 0.0019cm (0.00075) inches, metallized polyester having a thickness of 0.00127cm (0.0005 inches), and polyethylene having a thickness of 0.00635cm (0.0025 inch). Approximately eight grams of a humidity control material, in the form of a gel, was applied to approximately a 5.08 to 7.62cm (2-3 inch) area of the base layer. A pressure sensitive hot melt adhesive was deposited on the base layer in a perimeter around the humidity control material. The adhesive was applied with a thickness or depth of approximately 0.19cm (0.075) inches. While the adhesive material was still relatively hot and molten, the permeable layer was positioned over the humidity control material and the adhesive so as to bond to the base layer via the adhesive. The permeable layer was a cast nylon film with a thickness of approximately 0.00254cm (0.001 inches). The humidity control device was subject to various stresses, including physical manipulation, exposure to temperatures of at least 43.3 degrees Celsius (110 degrees Fahrenheit), and shipment across 500 miles via the United States Postal Services. Despite these various stresses, the base layer and permeable layer remained bonded to one another, and the gel remained in place between the two layers.

[0042] As used herein, the terms "substantially" or "generally" refer to the complete or nearly complete extent or degree of an action, characteristic, property, state, structure, item, or result. For example, an object that is "substantially" or "generally" enclosed would mean that the object is either completely enclosed or nearly completely enclosed. The exact allowable degree of deviation from absolute completeness may in some cases depend on the specific context. However, generally speaking, the nearness of completion will be so as to have generally the same overall result as if absolute and total completion were obtained. The use of "substantially" or "generally" is equally applicable when used in a negative connotation to refer to the complete or near complete lack of an action, characteristic, property, state, structure, item, or result. For example, an element, combination, embodiment, or composition that is "substantially free of' or "generally free of' an element may still actually contain such element as long as there is generally no significant effect thereof.

[0043] In the foregoing description various embodiments of the present disclosure have been presented for the purpose of illustration and description. They are not intended to be exhaustive or to limit the invention to the precise form disclosed. Obvious modifications or variations are possible in light of the above teachings. The various embodiments were chosen and described to provide the best illustration of the principals of the disclosure and their practical application, and to enable one of ordinary skill in the art to utilize the various embodiments with various modifications as are suited to the particular use contemplated. All such modifications and variations are within the scope of the present disclosure as determined by the appended claims when interpreted in accordance with the breadth they are fairly, legally, and equitably entitled.

Claims

1. A product package comprising ajar and a lid (160) that is removably securable to the jar, wherein the lid has an inner wall, the package further comprising a two-way humidity control device (150) for controlling headspace relative humidity in the product package, the humidity control device comprising:

   a base layer (110);
   a permeable layer (130) comprising a material permeable to water vapor and impermeable to aqueous solutions; and
   a humidity control agent (120) arranged between the base layer and permeable layer;
   wherein the base layer (110) of the humidity control device is the inner wall of the lid and the permeable layer (130) is coupled to the inner surface of the lid by an adhesive.

2. The product package of claim 1, wherein the adhesive is a hot-melt type adhesive.

3. The product package of claim 1, wherein the adhesive is heat activated.

4. The product package of claim 1, wherein the permeable layer comprises at least one of a polymeric film, fibrous polyethylene, elastomer, polyamide, paper, foil, metalized polyester, copolymer, polyolefin, copolyester, polylactic acid, and polyurethane.

5. The product package of claim 4, wherein the permeable layer comprises a microperforated material.

6. The product package of claim 4, wherein the permeable layer comprises a material with a WVTR of between 10 and 85 grams of water per 645 square cm (100 square inches) per 24 hours.

7. The product package of claim 1, wherein the humidity control agent comprises a solid, dispersion, emulsion, gel, or saturated or unsaturated aqueous solution.

8. The product package of claim 7, wherein the humidity control agent comprises at least one of a salt, sugar, glycerin, propylene glycol, other polyol, mannitol, sorbitol, xylitol, and amino acid.

Patentansprüche

1. Produktverpackung, umfassend ein Glasgefäß und

ein Deckel (160), der abnehmbar an dem Glasgefäß gesichert werden kann, wobei der Deckel eine Innenwand aufweist, wobei die Verpackung weiterhin eine Zweiwegefeuchtigkeitsregelvorrichtung (150) zur Regelung einer mit dem Luftraum zusammenhängenden Feuchtigkeit in der Produktverpackung umfasst, wobei die Feuchtigkeitsregelvorrichtung umfasst:

eine Basisschicht (110);
eine durchlässige Schicht (130), umfassend ein Material, das für Wasserdampf durchlässig ist und für wässrige Lösungen undurchlässig ist; und
ein Feuchtigkeitsregelmittel (120), das zwischen der Basisschicht und der durchlässigen Schicht eingerichtet ist;
wobei die Basisschicht (110) der Feuchtigkeitsregelvorrichtung die Innenwand des Deckels ist und die durchlässige Schicht (130) durch einen Klebstoff an die Innenfläche des Deckels gekoppelt ist.

2. Produktverpackung nach Anspruch 1, wobei der Klebstoff ein Klebstoff vom Hotmelt-Typ ist.

3. Produktverpackung nach Anspruch 1, wobei der Klebstoff wärmeaktiviert ist.

4. Produktverpackung nach Anspruch 1, wobei die durchlässige Schicht mindestens eine bzw. eines von einer Polymerfolie, faserförmigem Polyethylen, Elastomer, Polyamid, Papier, Folie, metallisiertem Polyester, Copolymer, Polyolefin, Copolyester, Polymilchsäure und Polyurethan umfasst.

5. Produktverpackung nach Anspruch 4, wobei die durchlässige Schicht ein mikroperforiertes Material umfasst.

6. Produktverpackung nach Anspruch 4, wobei die durchlässige Schicht ein Material mit einer WVTR zwischen 10 und 85 Gramm Wasser pro 645 Quadrat-cm (100 Quadratzoll) pro 24 Stunden umfasst.

7. Produktverpackung nach Anspruch 1, wobei das Feuchtigkeitsregelmittel einen Feststoff, eine Dispersion, eine Emulsion, ein Gel oder eine gesättigte oder ungesättigte wässrige Lösung umfasst.

8. Produktverpackung nach Anspruch 7, wobei das Feuchtigkeitsregelmittel mindestens eines, einen bzw. eine von einem Salz, einem Zucker, einem Glycerin, einem Propylenglykol, einem anderen Polyol, einem Mannit, einem Sorbit, einem Xylit und einer Aminosäure umfasst.

Revendications

1. Emballage de produit comportant un bocal et un couvercle (160) qui est en mesure d'être assujetti de manière amovible sur le bocal, dans lequel le couvercle a une paroi intérieure, l'emballage comportant par ailleurs un dispositif de régulation d'humidité à deux sens (150) servant à réguler l'humidité relative de l'espace libre dans l'emballage de produit, le dispositif de régulation d'humidité comportant :

une couche de base (110) ;
une couche perméable (130) comportant une matière perméable à la vapeur d'eau et imperméable aux solutions aqueuses ; et
un agent de régulation d'humidité (120) agencé entre la couche de base et la couche perméable ;
dans lequel la couche de base (110) du dispositif de régulation d'humidité est la paroi intérieure du couvercle et la couche perméable (130) est accouplée à la surface intérieure du couvercle au moyen d'un adhésif.

2. Emballage de produit selon la revendication 1, dans lequel l'adhésif est un adhésif de type thermofusible.

3. Emballage de produit selon la revendication 1, dans lequel l'adhésif est activé à chaud.

4. Emballage de produit selon la revendication 1, dans lequel la couche perméable comporte au moins l'un parmi un film polymère, du polyéthylène fibreux, un élastomère, du polyamide, du papier, une feuille d'aluminium, du polyester métallisé, de la polyoléfine, du copolyester, de l'acide polylactique et du polyuréthanne.

5. Emballage de produit selon la revendication 4, dans lequel la couche perméable comporte une matière microperforée.

6. Emballage de produit selon la revendication 4, dans lequel la couche perméable comporte une matière ayant un taux de perméabilité à la vapeur d'eau entre 10 et 85 grammes d'eau par 645 centimètres carrés (100 pouces carrés) par 24 heures.

7. Emballage de produit selon la revendication 1, dans lequel l'agent de régulation d'humidité comporte un solide, une dispersion, une émulsion, un gel ou une solution aqueuse saturée ou non saturée.

8. Emballage de produit selon la revendication 7, dans lequel l'agent de régulation d'humidité comporte au moins l'un parmi du sel, du sucre, de la glycérine, du propylène glycol, un autre polyol, du mannitol, du sorbitol, du xylitol, et de l'acide aminé.

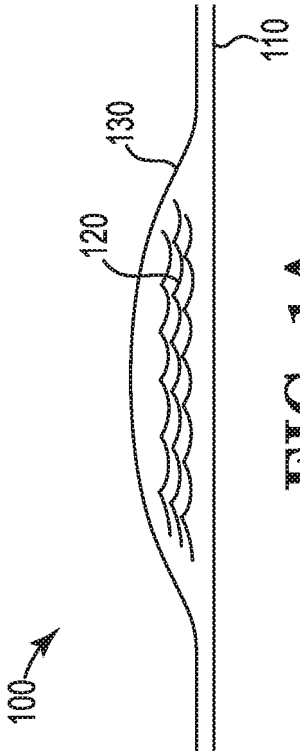

FIG. 1A

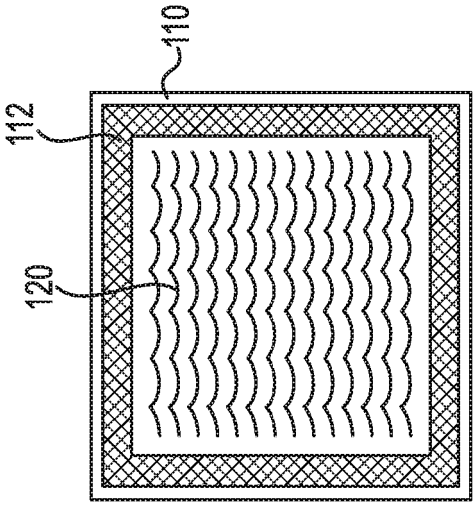

FIG. 1B

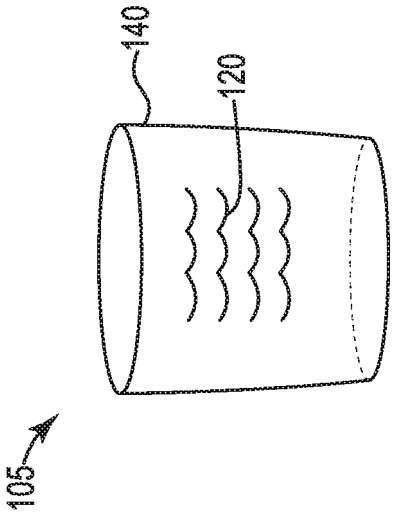

FIG. 1C

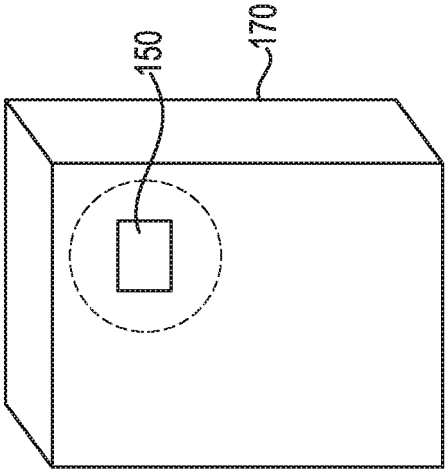

FIG. 1E

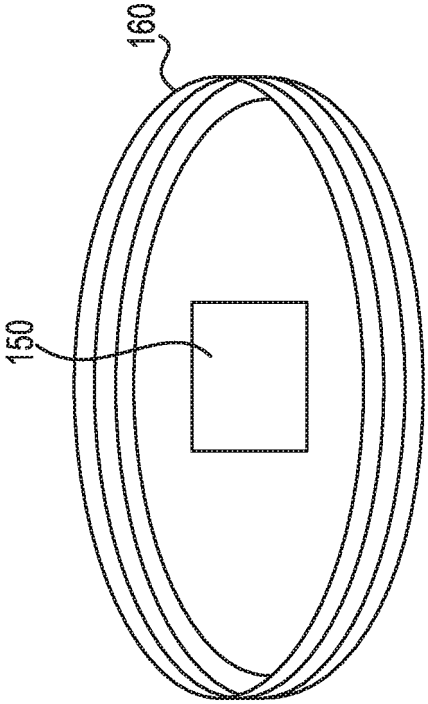

FIG. 1D

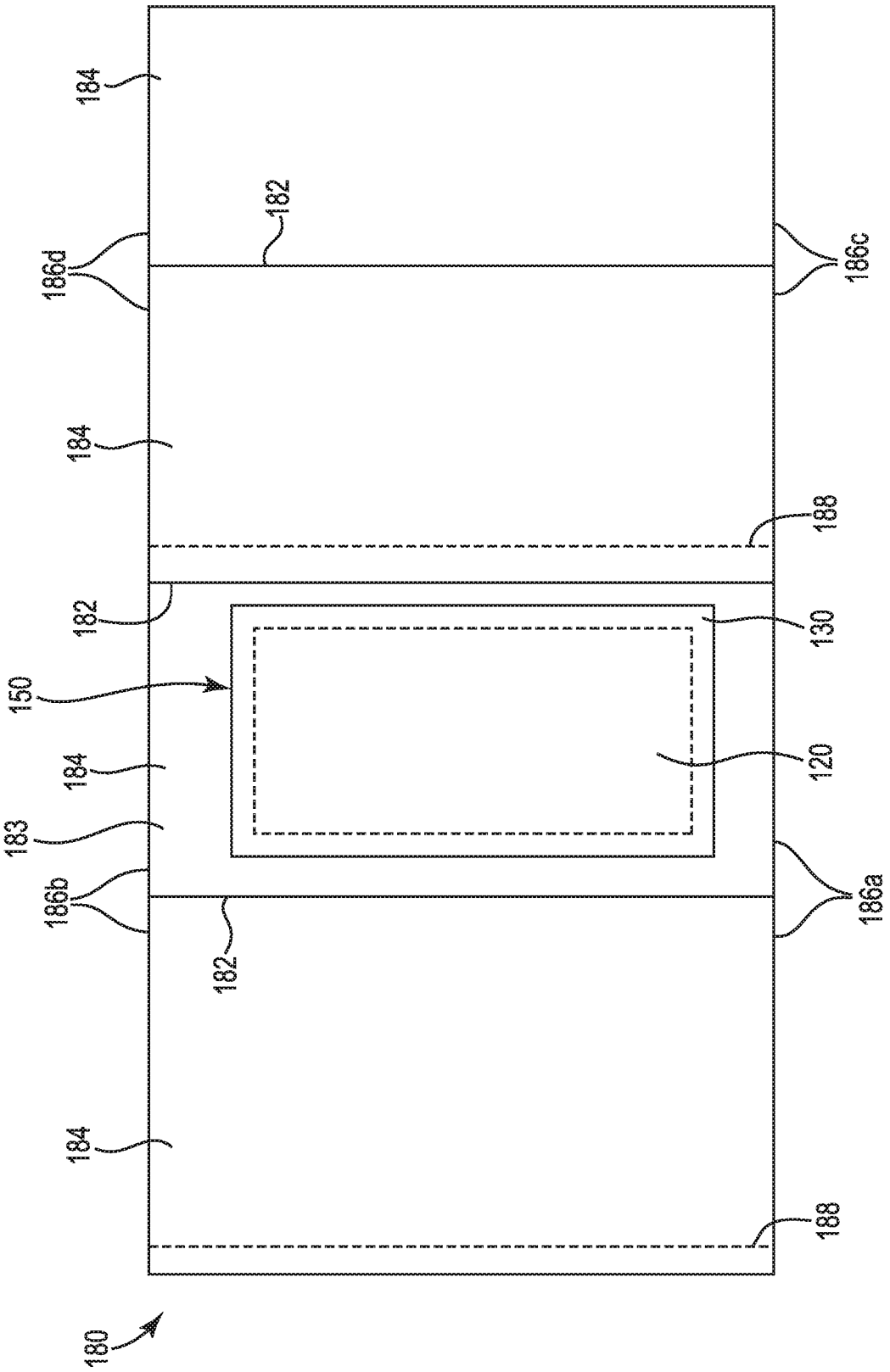
184
186d
182
184
182
150
184
183
186b
182
184
180
186c
188
130
120
186a
188

FIG. 1F

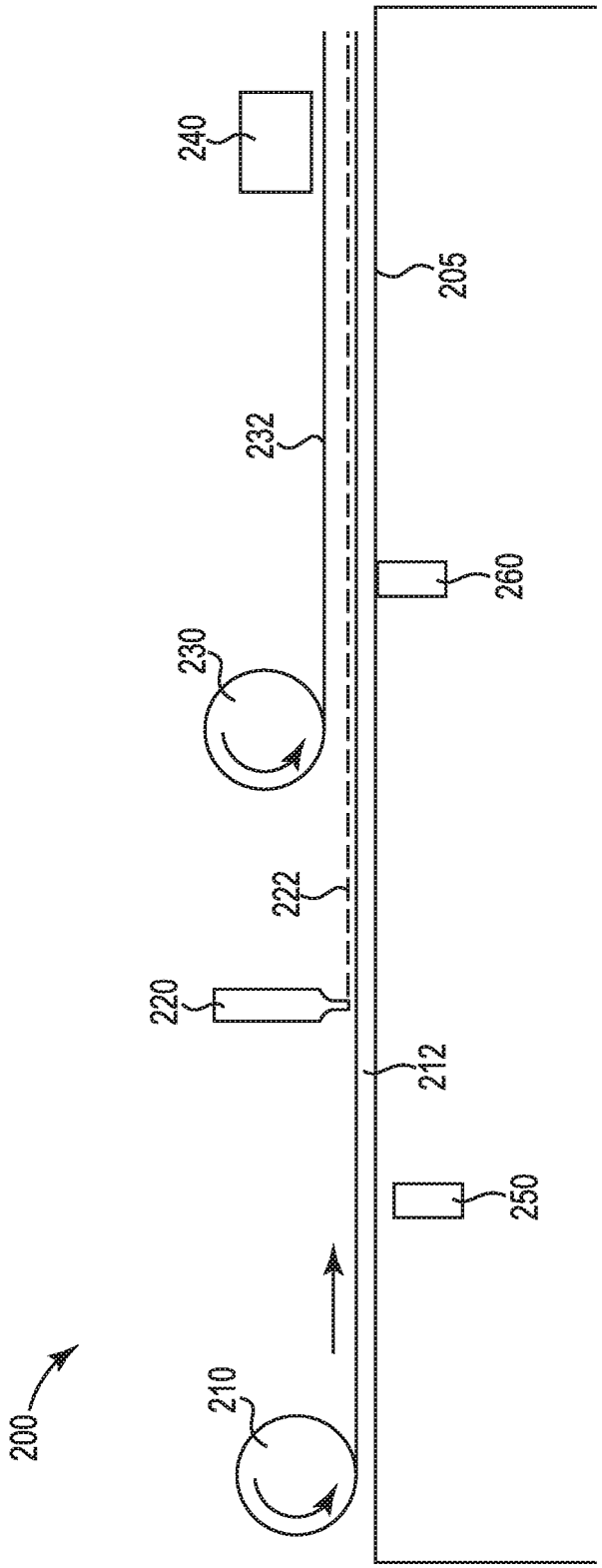

FIG. 2

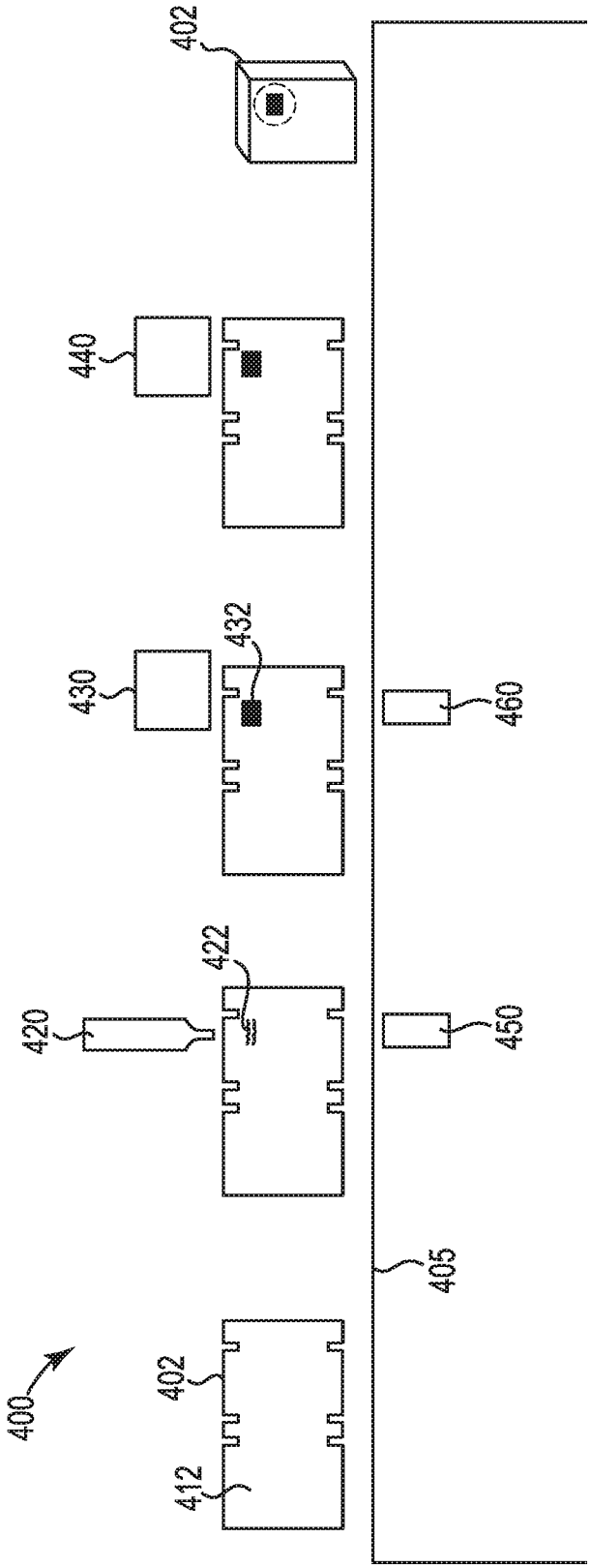

FIG. 3

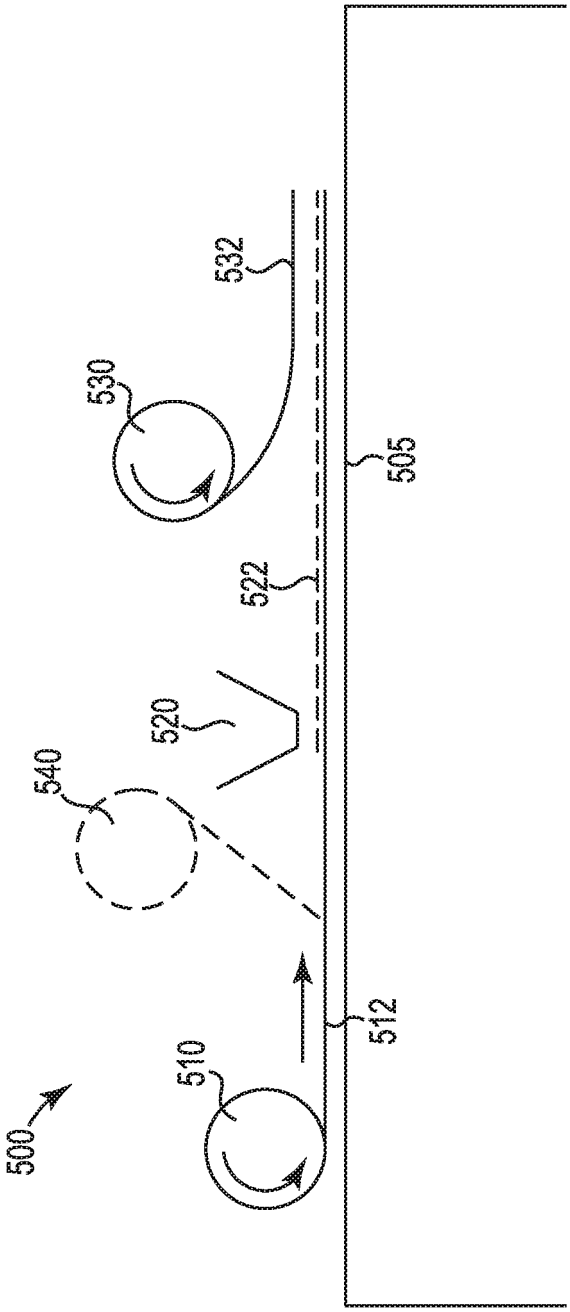

FIG. 4

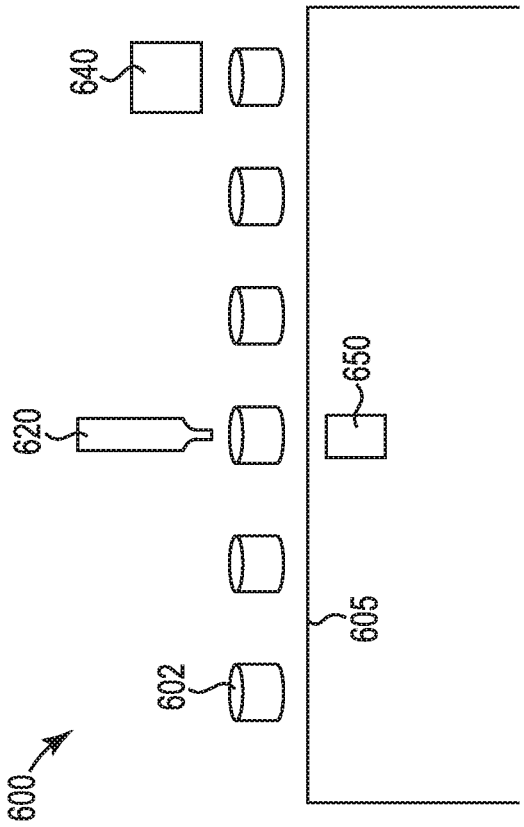

FIG. 5

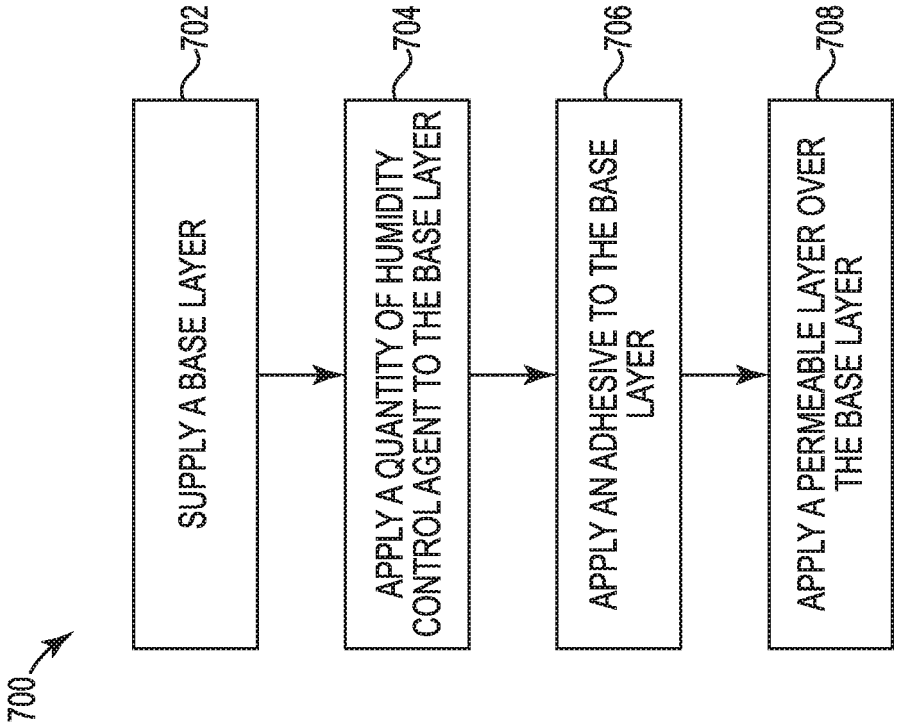
700
702
SUPPLY A BASE LAYER
704
APPLY A QUANTITY OF HUMIDITY CONTROL AGENT TO THE BASE LAYER
706
APPLY AN ADHESIVE TO THE BASE LAYER
708
APPLY A PERMEABLE LAYER OVER THE BASE LAYER

FIG. 6

REFERENCES CITED IN THE DESCRIPTION

This list of references cited by the applicant is for the reader's convenience only. It does not form part of the European patent document. Even though great care has been taken in compiling the references, errors or omissions cannot be excluded and the EPO disclaims all liability in this regard.

Patent documents cited in the description

- US 5936178 A **[0003] [0014]**
- EP 0531075 A **[0004]**
- FR 2620685 **[0005]**
- US 2005172814 A **[0006]**
- US 9750811 B **[0014]**
- US 6921026 B **[0014]**
- US 854159 **[0014]**