N. J. LLOYD.

AUTOMATIC PLATEN TURNER FOR TYPE WRITERS.

APPLICATION FILED FEB. 3, 1917.

1,236,850.

Patented Aug. 14, 1917.

2 SHEETS—SHEET 1.

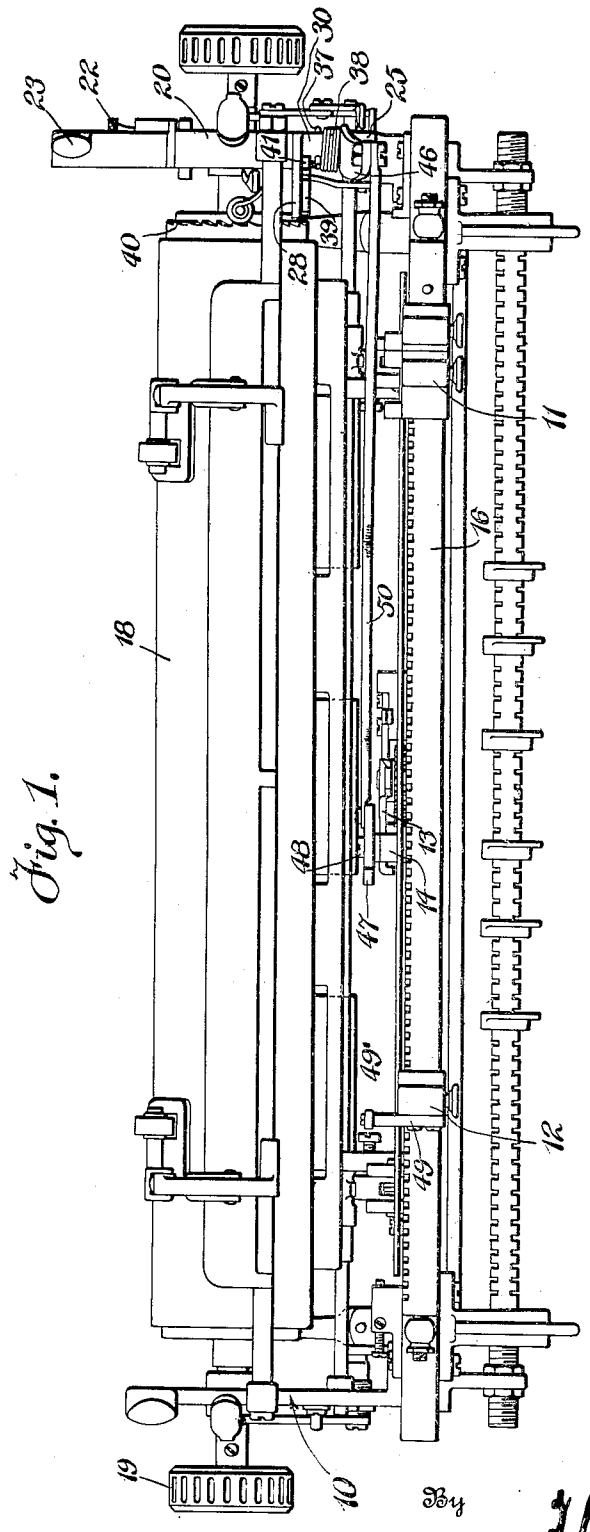

Fig. 1.

Inventor
N. J. Lloyd.

By

Attorneys.

N. J. LLOYD.

AUTOMATIC PLATEN TURNER FOR TYPE WRITERS.

APPLICATION FILED FEB. 3, 1917.

1,236,850.

Patented Aug. 14, 1917.

2 SHEETS—SHEET 2.

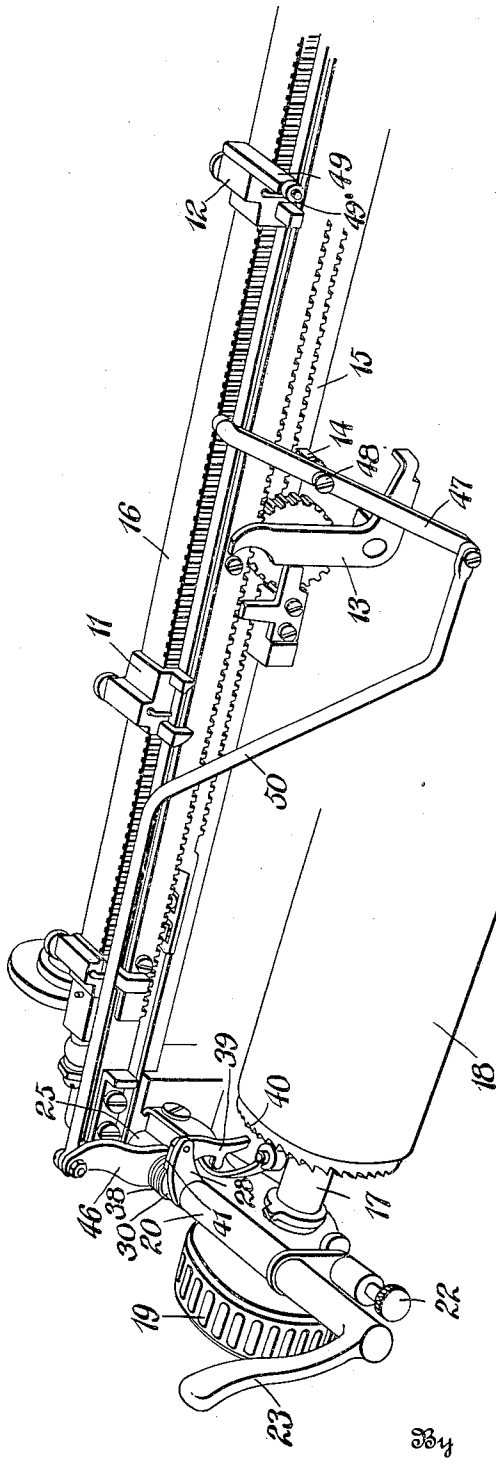

Fig. 2.

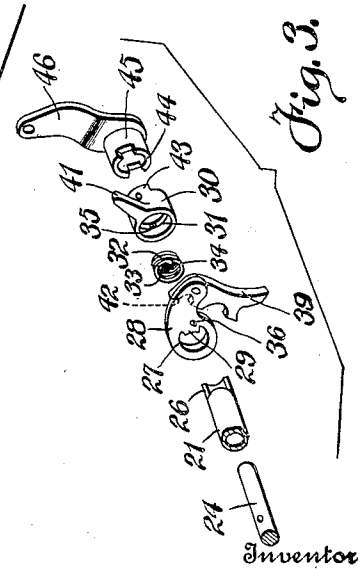

Fig. 3.

Inventor

N. J. Lloyd.

By

Attorneys

UNITED STATES PATENT OFFICE.

NAFEW J. LLOYD, OF BUTTE, MONTANA.

AUTOMATIC PLATEN-TURNER FOR TYPE-WRITERS.

1,236,850. Specification of Letters Patent. Patented Aug. 14, 1917.

Application filed February 3, 1917. Serial No. 146,433.

To all whom it may concern:

Be it known that I, NAFEW J. LLOYD, a citizen of the United States, residing at Butte, in the county of Silverbow and State of Montana, have invented certain new and useful Improvements in Automatic Platen-Turners for Type-Writers, of which the following is a specification.

My invention relates to new and useful attachments for typewriters and more particularly to platen turning attachments, the primary object of my invention being the provision of an attachment which may be applied to standard typewriters as now constructed to cause automatic turning of the platen to advance the sheet when the carriage is moved to the right for the commencement of a new line of writing.

A still further object of my invention consists in providing an attachment of the above described character which will in no way interfere with the present means provided for turning the platen either through manual reciprocation of the carriage or by the usual platen twirler.

In this connection, another object which I have in view is to so arrange my improved mechanism as to in no way interfere with the use and function of the line space gage and line space handle or to alter their operation in connection with each other.

A further object of my invention resides in arranging the mechanism for turning the platen so that it will be actuated through engagement with the right marginal stop and, consequently, will operate to turn the platen whenever the carriage has been moved to a position governed by such stop. For this reason, it will be apparent that the attachment will operate to effectively turn the platen at the end of each line, irrespective of the width of paper and consequent adjustment of the right marginal stop.

A further object of my invention consists in utilizing the stop stud of the regular stop lever as a support for the actuating lever of my mechanism which engages the right marginal stop.

With these and other objects in view, my invention will be more fully described, illustrated in the accompanying drawings and then specifically pointed out in the claims which are attached to and form a part of this application.

In the drawings:

Figure 1 is a fragmentary plan view of a conventional form of typewriter with my attachment applied thereto;

Fig. 2 is a fragmentary perspective view of the carriage, platen and related mechanisms of the typewriter more clearly showing the application and operation of my attachment;

Fig. 3 is a strung out perspective view of certain of the mechanism employed.

Corresponding and like parts are referred to in the following description and indicated in all the views of the drawings by the same reference characters.

In order to more clearly disclose the construction, application and operation of my platen turning attachment, I have illustrated it in connection with a standard Monarch typewriter, only such parts of the typewriter structure being shown as are essential to a clear understanding of my invention. In the drawings, I show a reciprocally mounted carriage 10, the movement of which is controlled, in one direction, by a left marginal stop 11 and in the other direction by a right marginal stop 12, through engagement of such stops with the usual stop lever 13, which, when engaging the left marginal stop, is swung into engagement with the stop stud 14 carried by the frame 15 of the typewriter. The marginal stops are adjustably locked upon the marginal rail 16 and may, therefore, be readily adjusted to provide margins of any desired width both at the right and left of the paper employed in the typewriter. All of these parts are of the usual construction and their operation is, therefore, well understood and need not be explained at length. This carriage journals the shaft 17 of the usual rubber covered platen roll 18 and mounted on the ends of this shaft are the usual platen thumb twirlers 19 by means of which the platen may be manually turned while the carriage remains stationary. One of the carriage brackets forming a bearing for the shaft 17 is provided with a bearing 20 extending at right angles to the platen between one end thereof and the adjacent thumb twirler 19 to journal the tubular shaft or sleeve 21 of the usual line space gage 22 which, as is customary, may be set to govern the number of spaces through which the platen will be turned by actuation of the line space handle 23. This line space handle is fixed or formed upon one end of a shaft 24 which is journaled in the tubular shaft or sleeve 21 of the line space

gage and at its free end in a bearing 25 formed upon the carriage. The inner end of the sleeve 21 is cut away at one side, as shown at 26, to seat in the opening 27 of a pawl supporting lever 28. The bore 27 is provided at one side with an inwardly directed abutment 29 coöperating with the uncutaway portion of the sleeve in such a manner as to permit a limited turning of the sleeve before any movement is imparted by the sleeve to the pawl supporting lever 28 and in such a manner that further movement of the sleeve will cause swinging or turning of the lever. A hub 30 is journaled upon the shaft 24 adjacent the rear face of the lever 28 and is formed with a recess 31 in one end to house a helical spring 32 having terminals 33 and 34 bent outwardly to extend parallel to the axis of the spring coil to seat in sockets 35 and 36, respectively, formed in the hub and lever 28 whereby, assuming that the hub 30 is fixed to the shaft 24, the sleeve 21 and, consequently, the line space gage will bear a certain relative position with respect to the shaft. A pin 37 passed through the hub and shaft 24 serves to lock the hub to the shaft and also serves to anchor one end of a helical spring 38 which surrounds the hub and which has its free end extended radially to engage the carriage so that the tension of the spring will constantly tend to hold the shaft and, consequently, the line space gage in a predetermined position. A pawl 39 is swingingly supported by the pawl supporting lever 28 and is adapted, upon turning of the shaft 24, to be swung into engagement with the platen ratchet 40 carried by one end of the platen roll through the action of a pawl swinging finger 41 carried by the hub 30 and engaging at its free end in a notch 42 formed in the pivoted head of the pawl and shown in dotted lines in Fig. 3. Because of this construction, a partial turning of the shaft 24, by means of the line space handle, will bring the pawl into engagement with the ratchet and further turning of the shaft will, therefore, cause a predetermined turning of the platen. The extent of this turning is dependent upon the setting of the line space gage 22, the platen being turned through one, two or three spaces, according to the setting of this gage. As the above described structure forms a regular part of the standard type of typewriter shown, any further explanation of its operation is unnecessary.

The hub 30, however, illustrated in Fig. 3, is shorter than that usually employed and its end more remote from the pawl supporting lever 28 is notched to provide clutch teeth 43 to lockingly engage with correspondingly formed clutch teeth 44 upon the end of a hub 45 mounted on the shaft 24 between the hub 30 and the bearing 25. This second hub 45 carries a radially extending lever arm 46 which, through the connection of the hubs and of the hub 30 with the shaft 24, is turned through turning of the line space handle 23. A lever 47, which may be termed a platen turning lever, is pivoted intermediate its length upon a pivot screw 48 threaded into the stop stud 14 and its upper end projects in juxtaposition to the marginal rail 16 so that it may engage a roller 49' carried by an abutment 49 fixed to the right marginal stop 12 and projecting into its path of movement, as best shown in Fig. 1. A link 50 connects the lower end of the lever 47 with the free end of the lever 46 so that swinging movement of the lever 47 will be transmitted to the lever 46 to cause turning of the shaft 24 and, consequently, of the sleeve 21 and pawl supporting lever 28. The proportioning of the various levers and of the link 50 is such that the lever 47, through its engagement with the abutment 49 upon return of the carriage to the right, will cause a full advancing of the platen for the space or spaces for which the line space gage is set by the time the stop lever 13 engages the right marginal stop to check further movement of the carriage. Preferably, I proportion the throw of the various levers so that setting of the line space gage for a turning of the platen through one or two spaces will cause turning of the platen through two spaces when operated by my automatic mechanism as it is seldom that single spacing is desired. Setting of the gage for three spaces will, however, act with my mechanism to turn the platen through three spaces.

Obviously, the above described attachment does not in any way interfere with the manual turning of the platen through the thumb twirlers 19 or by means of the line space handle 23. In fact, it is not intended to replace any of the platen controlling mechanism now in use, but merely to provide a new and distinct mechanism for turning the platen whenever the carriage is brought to its full right hand position. Although this mechanism constitutes a complete attachment in itself it is primarily adapted and intended for use upon electrically operated typewriters in which electrical means is provided for the return of the carriage after the end of the line is reached. Clearly, an attachment of the character described, when employed with such a typewriter, is a great advantage as it is necessary only to close a circuit controlling the carriage returning mechanism to not only insure return of the carriage, but also turning of the platen so that the operator may immediately proceed writing. Such advantage may be readily understood by reference to a copending application filed by me Feb. 3, 1917 and bearing the serial No. 146,432, which discloses both an electrical carriage controlling mech-

anism and the above described platen turning mechanism and clearly brings out their coöperation.

As practically all standard makes of typewriters now in use have a platen turning mechanism in which a right hand movement of a shifting finger operates to turn the platen, it will be clear that the above described attachment may be readily applied to typewriters of different makes. However, I reserve the right to make any changes in details of construction in the way of adapting it to other forms of typewriters without departing from the spirit of my invention as set forth in the claims.

Having thus described the invention, what is claimed as new is:

1. In a typewriter, a reciprocally mounted carriage, a marginal rail, a marginal stop adjustably secured to the rail, a platen mounted for turning movement upon the carriage, means including a rotatable shaft for turning the platen, and means operatively connected to the shaft and engageable with the stop for causing turning of the platen when the carriage has reached the extreme limit of its movement permitted by the stop, said means including an arm fixed to the shaft, a lever arm pivotally supported by the carriage and adapted through movement of the carriage to engage the stop, and connecting means between the arms.

2. In a typewriter, the combination with a frame, a carriage reciprocally supported upon the frame, a marginal rail supported by the frame, a marginal stop adjustable upon the rail, a stop lever mounted on the carriage and engageable with the stop to limit movement of the carriage in one direction, a platen supported for turning movement upon the carriage, a shaft mounted for turning and provided at one end with a handle, a pawl supporting lever arm projecting radially with respect to the shaft, means for causing the arm and shaft to turn in unison, said means being adjustable to vary the position of the arm with respect to the shaft, means for normally holding the shaft in a predetermined position, a lever arm operatively connected to the shaft, a lever supported by the carriage and movable therewith and disposed to be swung through engagement with the marginal stop immediately prior to the engagement of the marginal stop by the stop lever, and operative connection between the lever arm and lever.

In testimony whereof I affix my signature.

NAFEW J. LLOYD. [L. S.]