Section 29(1)
Regulation 3.1(2)
FILE: 96 1 124

AUSTRALIA
Patents Act 1990

NOTICE OF ENTITLEMENT

I, Peter Francis Maxwell, Patent Attorney of Peter Maxwell & Associates, Level 6, 60 Pitt Street, Sydney, New South Wales, 2000 declare that I am authorised by BAXTER INTERNATIONAL INC being the applicant in respect of Application No. 55,371/96 to state the following on its behalf:-

The person nominated for the grant of the patent BAXTER INTERNATIONAL INC has entitlement from the actual inventors THOMAS E DUDAR; PETER L GRAHAM; STEVEN C JEPSON by virtue of Assignment.

The person nominated for the grant of the patent BAXTER INTERNATIONAL INC has entitlement from the applicants of the application listed in the declaration under Article 8 of the PCT on the basis of Assignment.

The basic application listed in the declaration under Article 8 of the PCT is the first application made in a Convention country in respect of the invention.

Dated 30 April 1998

SIGNED for and on behalf of
BAXTER INTERNATIONAL INC

Signature _____
NAME: Peter Francis Maxwell
POSITION: Authorised Signatory

AU9655371

(12) PATENT ABRIDGMENT (11) Document No. AU-B-55371/96
(19) AUSTRALIAN PATENT OFFICE (10) Acceptance No. 694029

(54) Title
NEEDLELESS VIAL ACCESS DEVICE

International Patent Classification(s)
(51)[6] A61J 001/20 A61M 037/00

(21) Application No. : 55371/96 (22) Application Date : 08.04.96

(87) PCT Publication Number : WO96/33769

(30) Priority Data

(31) Number	(32) Date	(33) Country
42706	24.04.95	US UNITED STATES OF AMERICA

(43) Publication Date : 18.11.96

(44) Publication Date of Accepted Application : 09.07.98

(71) Applicant(s)
BAXTER INTERNATIONAL INC.

(72) Inventor(s)
THOMAS E. DUDAR; PETER L GRAHAM; STEVEN C. JEPSON

(74) Attorney or Agent
PETER MAXWELL & ASSOCIATES , PO Box R1466 Royal Exchange, SYDNEY NSW 1225

(56) Prior Art Documents
AU 68843/94

(57) Claim

1. A cannula assembly comprising a blunt cannula having a flow channel and a piercing member adapted to pierce a solid closure or stopper, said piercing member including

(i) a tip having a penetrating member at its distal end,

(ii) a flexible, curved shaft extending from the tip inserted into the flow channel by straightening the shaft and retained therein by a friction fit between the curved shaft and the flow channel,

(iii) means allowing fluid to flow through the flow channel when the shaft is retained in the flow channel.

OPI DATE 18/11/96 APPLN. ID 55371/96
AOJP DATE 09/01/97 PCT NUMBER PCT/US96/04775

AU9655371

IN

(51) International Patent Classification 6 :
A61M 37/00

A1

(11) International Publication Number: WO 96/33769

(43) International Publication Date: 31 October 1996 (31.10.96)

(21) International Application Number: PCT/US96/04775

(22) International Filing Date: 8 April 1996 (08.04.96)

(30) Priority Data:
08/427,063 24 April 1995 (24.04.95) US

(71) Applicant: BAXTER INTERNATIONAL INC. [US/US]; One Baxter Parkway, Deerfield, IL 60015 (US).

(72) Inventors: DUDAR, Thomas, E.; 228 N. Crescent Avenue, Palatine, IL 60067 (US). GRAHAM, Peter, L.; 4342 Old Mill Road, Pickney, MI 48169 (US). JEPSON, Steven, C.; 103 S. Cedar Street, Palatine, IL 60067 (US).

(74) Agents: NICHOLS, Jeffrey, C. et al.; One Baxter Parkway, Deerfield, IL 60015 (US).

(81) Designated States: AU, CA, JP, MX, European patent (AT, BE, CH, DE, DK, ES, FI, FR, GB, GR, IE, IT, LU, MC, NL, PT, SE).

Published
With international search report.

(54) Title: NEEDLELESS VIAL ACCESS DEVICE

(57) Abstract

The present invention provides a piercing member (12) adapted for use with a flow channel. The piercing member (12) has a penetrating member (14) for piercing a solid closure, and is retained to the flow channel, but still allows fluid to flow through the flow channel (72) while retained to the flow channel (72).

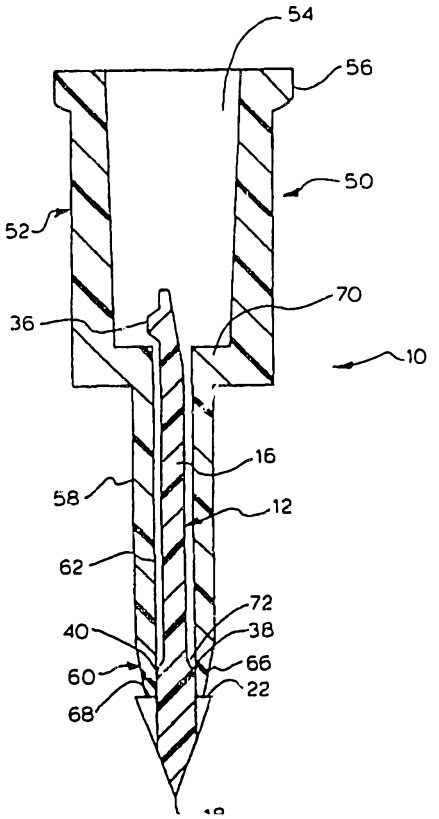

Description
Needleless Vial Access Device

Related Application

This application is a continuation-in-part application of the commonly assigned U.S. Patent Application Serial No. 07/737,735.

Field of the Invention

The invention generally pertains to medical products and more particularly to a blunt cannula assembly having a piercing tip associated therewith to penetrate a rubber septum of a drug access vial to access the vial contents with the blunt cannula.

Background of the Invention

In the medical field, it is common to access the vascular system of a patient by inserting a venous catheter into a patient's vein. The catheter may be connected through tubing to I.V. solution containers or other fluid sources. It is also customary to provide injection sites along the tubing flow path for the administration of supplemental fluids for treatment of the patient.

Injection sites usually have a housing defining a fluid flow path which is connected at one end to the tubing to the patient and closed at an opposite end by an elastomeric or rubber septum. The septum prevents contaminants from making their way into the vascular system of the patient. A pointed cannula or needle can be forced through the septum into fluid flow communication with the flow path of the injection site.

Repetitive punctures of the septum with a cannula or a needle leads to "coring" or damage to the septum. This in turn leads to a potential source of contamination from the environment, and may also lead to leaking through the damaged portion of the septum.

Pointed cannulae and needles also present a potential hazard to medical personnel. Due to problems associated with infectious blood-borne agents such as the AIDS virus, personnel using such pointed cannulae do so with great care. Notwithstanding careful and prudent practice it is possible for medical personnel to puncture their skin with a pointed cannula which could possibly lead to infection of that person.

As set forth in commonly assigned U.S. Patent Nos. 5,158,554; 5,167,648; 5,171,234; and 5,188,620, these problems of coring and skin puncturing have lead to the development of cannula embodiments with blunt ends that do not puncture the skin of medical personnel. These blunt cannulae are used with injection sites having pre-slit septums.

While blunt cannulas can pierce pre-slit septums, they are ineffective in piercing solid rubber stoppers. This is significant as drug vials are typically sealed with such solid stoppers.

In an effort to overcome some of these difficulties, devices known as "dispensing pins" can be used to penetrate the stopper of drug vials. Such dispensing pins are typically a sharp spike cannula and can employ a check valve in an effort to prevent gross fluid leakage. On the opposing end of the cannula is a standard luer fitment typically closed off, when not in use, by a cap. These dispensing pins tend to disengage from the vial stopper so that some leakage may occur.

Disclosed in U.S. Patent No. 5,100,394; a pre-slit injection site assembly has an injection site and a piercing point for coupling the site to a standard drug vial. Primarily developed for use with multi-dose vials, such an assembly can be lockingly engaged with a drug vial, thereby permitting the usage of a blunt cannula rather than a sharp cannula or needle. However, this assembly may not be a cost efficient device when used with single-dose drug vials.

Summary of the Invention

In accordance with the present invention, a piercing member is adapted to be used with a cannula assembly so that the cannula may pierce a rubber septum of a drug vial or other type of unslit closure. The cannula assembly includes a blunt cannula which may be of one of the several designs previously disclosed in the patents identified above, and a piercing member which can be held by or contained within the flow channel of, the cannula.

Generally, the piercing member includes a tip having a penetrating member of various shapes and designs including a sharpened or spike point capable of piercing an unslit stopper or closure. The piercing member further includes a flexible curved shaft extending from the tip which when straightened releases the piercing member from the cannula and which when curved prevents inadvertent disengagement of the piercing member from the cannula. Attached to a receiver, such as a standard syringe, the cannula assembly is inserted through the vial stopper and into the vial so that the vial fluid can be infused into the receiver. After infusion, the cannula assembly is withdrawn from the vial with the piercing member being contained within and disposed with the vial. Used in this manner, the cannula assembly allows the medical professional to access a standard

AUSTRALIAN

drug vial with minimal exposure to a sharpened piercing member and is left with a blunt cannula to conclude the drug administration procedure to a patient.

Numerous other advantages and features of the present invention will become readily apparent from the following detailed description of the invention and the embodiments thereof, from the claims and from the accompanying drawings in which the details of the invention are fully and completely disclosed as a part of this specification.

Brief Description of the Drawings

Figure 1 is a perspective view of a piercing member;

Figure 2 is a cross-sectional view of a preferred piercing member as contained in the cannula assembly;

Figures 3A, 3B and 3C are cross-sectional views illustrating the operation of the cannula assembly;

Figures 4, 5 and 6 are perspective views of alternative embodiments of the piercing member;

Figures 7, 8 and 9 are cross-sectional views of alternative embodiments of the cannula assembly;

Figure 10 is a perspective view of a piercing member according to the invention, and

Figures 11 and 12 are perspective views of other piercing members.

Detailed Description of a Preferred Embodiment

A piercing member 12 is illustrated in Figure 1 as part of the cannula assembly 10 shown in Figure 2. The piercing member 12 includes a tip 14, a shaft 16 and a retention means. Preferably of a general conical shape, tip 14 has a penetrating member that is a sharpened or spike point 18, a body

STRALIA

portion 20 and a base 22. Body portion 20 is provided with at least one cutout, preferably two cutouts 24 and 26. The shaft 16 has a squared off portion 28 fitting within cutouts 24, 26 so that shaft 16 is integrally connected with and extending from tip 14. At least one channel, preferably two channels 30 and 32, are created by the fitment of squared portion 28 and cutouts 24, 26. The shaft 16 terminates at the opposing end in a taper surface 34. Opposing taper surface 34, retention means in the preferred embodiment includes a generally trapezoidal shaped protuberance 36.

The preferred embodiment shown in Figure 1 also includes an alignment means which is a series of corners 38, 40, 42 and 44 positioned at the termination of squared portion 28. From corners 38, 40, 42 and 44 the shaft conforms or transits in region 46 from the generally squared portion 28 into a generally cylindrical extension 48.

The cannula assembly 10 illustrated in Figure 2, includes a blunt cannula 50 and piercing member 12. As described in pending applications, the cannula 50 includes a proximal end 52 defining an interior region 54 and may have a luer flange 56 for connection to a suitable mating engaging structure such as a syringe. A generally cylindrical mid-region 58 extends from the proximal end 52 and an end region 60 extends from the mid-region 58. This embodiment of the cannula 50 minimizes kick-back or recoil owing to the provisions of substantially cylindrical mid-region 58. This embodiment of the cannula 50 also increases withdrawal or tug resistance.

A generally cylindrical internal flow channel 62 extends through the end region 60 and mid-region 58 in communication with the interior region 54 of the proximal

end region 52. The end region 60 is provided with a tapered surface 66 to minimize the insertion force.

The shaft 16 of piercing member 12 is slidably received within flow channel 62 of blunt cannula 50 through end region 60. When completely received within cannula 50, shaft 16 extends into interior region 54 of cannula 50 and base 22 contacts the distal blunt end 68 of end region 60. In this embodiment, the protuberance 36 is positioned against the stepped wall 70 between proximal end 52 and mid-region 58 to prevent the inadvertent disengagement of piercing member 12 and cannula 50. Corners 38, 40, 42 and 44 align or center piercing member 12 within flow channel 62. Since the outer diameter of shaft 16 is slightly less than the interior diameter of flow channel 62, a void 72 is created between shaft 16 and interior surfaces of end region 60 and mid-region 58. Void 72 permits fluid and air flow through flow channel 62 despite the presence of shaft 16.

This embodiment of cannula assembly 10 can be packaged as a single-use medical device in a sterile blister pack and utilize a standard tip protector cover over cannula assembly 10. As best illustrated in Figures 3A-3C, cannula assembly 10 is removed from the blister pack and releasably connected to a fluid flow member or receiver such as a syringe 74 of known construction. Following drug package instructions, a standard single use drug vial 76 having a solid closure or stopper 78 is prepared. After removal of the tip protector, a volume of air can be drawn into or expelled from syringe 74, if required, without dislodging cannula assembly 10. The cannula assembly 10 connected with syringe 74 is then positioned at the center of stopper 78 and pressed firmly towards vial 76 so that piercing member 12 pierces

through stopper 78. To reduce the insertion force required, tip 14 can be lubricated, for example, during the manufacturing process, with silicone.

As shown in Figure 3B, cannula assembly 10 is inserted through stopper 78 until stepped wall 70 provides a positive stop to insertion by meeting the upper surface of either vial 76 and/or stopper 78. Complete insertion is achieved when tip 14 and the immediate portion of shaft 16 pass beyond stopper 78 and enter the vial chamber 80. In this example, the liquid held in vial chamber 80 can now be removed through cannula assembly 10 and into the syringe 74. Once the liquid has been removed from chamber 80, syringe 74 and cannula assembly 10 are withdrawn from vial 76. As cannula assembly 10 exits stopper 78, base 22 of tip 14 meets stopper 78 and prohibits the further withdrawal of piercing member 12. At this point of the withdrawal procedure, sufficient force is created to cause taper surface 34 to deflect, permitting protuberance 36 to slide over stepped wall 70 and through flow channel 62, thereby permitting the disengagement of piercing member 12 from cannula 50.

As illustrated in Figure 3C, cannula 50 while still connected with syringe 74, is completely withdrawn from stopper 78. Piercing member 12 remains either in the vial chamber 80 or imbedded in stopper 78. The vial 76 with piercing member 12 can then be disposed of without the user having any further exposure to spike point 18 or piercing member 12. The syringe 74 with cannula 50 is now ready for insertion into an injection site or other closure having a pre-slit septum, for example, as those disclosed in related pending applications.

Although the retention means of the preferred embodiment of the cannula assembly 10 has been described

as a force fit between protuberance 36 and stepped wall 70, retention could be achieved when protuberance 36 remains in flow channel 62 of mid-region 58 causing the end of shaft 16 to flex and contact at least some portion of the inner surface or wall of mid-region 58. Retention could also be achieved through a spring-type action. Absent protuberance 36, a spring action retention means can be achieved through a naturally arced or curved shaft 168 as shown in Figure 10. The curved shaft 168 has sufficient flexibility so that the shaft 168 generally straightens upon insertion into flow channel of the cannula. When the base 170 of tip 172 contacts the vial stopper and causes the separation of the piercing member 166 from the cannula, the shaft 168 returns to its natural curved state.

Further variations on piercing member are illustrated in Figures 4-6 and 12 with the following description highlighting some of the distinctions between the embodiments. Shown in Figure 4, piercing member 90 includes a solid tip 92 with a pair of stand-offs 94 and 96 positioned on the base 98 of tip 92. Upon assembly of cannula 50 and piercing member 90, stand-offs 94, 96 rest against distal blunt end 68 of cannula 50. Stand-offs 94, 96 create a void 100 to permit fluid and air flow through the flow channel 62 of cannula 50. In addition, piercing member 90 is provided with a retention means including a generally semi-circular shaped protuberance 102 differing from the preferred protuberance 36 in shape. Protuberance 102 cooperates with a stepped portion 104 of the terminal end of shaft 106 in the appropriate retention through either force fit or a spring action, of piercing member 90 within cannula 50.

Figure 5 illustrates a third embodiment of piercing member 110. A hollow bore 113 extends through the

piercing member 110 from the generally v-shaped tip 112 to the terminal end 116 of the shaft 114. Although the shaft 114 is generally cylindrical in shape, it has an outer diameter which gradually decreases from the integral connection with tip 112 to the terminal end 116 of shaft 114. In this manner, piercing member 110 is force fit into flow channel 62 of cannula 50. The piercing member 110 will remain either in the vial chamber 80 or imbedded in stopper 78 upon withdrawal of cannula 50 as the base 118 of the v-shaped tip 112 does not permit withdrawal from stopper 78.

As can be appreciated, the force fit of piercing member 110 can also be achieved by reversing the variation of the outer diameter, that is increasing from integral connection with tip 112 to terminal end 116 of shaft 114. The force fit retention is achieved as long as interference occurs at some point along the shaft and the inner surface of cannula.

Figure 6 also illustrates another embodiment of piercing member 120 differing in a solid tip 122 integrally connected with the shaft 124 at a thickened neck portion 126 of shaft 124. The neck portion 126 is of a sufficient thickness so as to provide a void 128 between distal blunt end 68 and tip 122. Running longitudinally through shaft 124, a groove 130 is formed to permit fluid flow along shaft 124. Rather than terminally end with a taper surface and protuberance, the piercing member 120 is provided with a pair of deflecting fingers 132, 134 which can be forcibly flexed inward or toward one another upon assembly of piercing member 120 and cannula 50. Upon insertion in flow channel 62, deflecting fingers 132, 134 will naturally flex outwardly once they pass stepped wall 70 of cannula 50, thereby functioning similarly to tapered surface 34 and

protuberance 36. Further, if deflecting fingers 132, 134 do not pass stepped wall 70, but remain in flow channel 62, deflecting fingers 132, 134 will achieve retention of piercing member 120 in cannula 50 through a spring action.

Additional embodiments of the cannula assembly are illustrated in Figures 7, 8 and 9. The cannula assembly 140 shown in Figure 7 includes a piercing member 142 having a tip 144 of an arrowhead shape which is friction fit over distal blunt end 68 of cannula 50 as opposed to a force fit or spring action retention within the flow channel of the cannula. Upon insertion and withdrawal of assembly 140, piercing member 142 parts from cannula 50 and remains in the drug vial chamber 80.

Figures 8 and 9 illustrate cannula assemblies 150 and 160 which utilize a positive connecting means such as a flexible coupling member 152 in Figure 8 or a threaded lock 162 as in Figure 9, to permit appropriate retention and separation between piercing members 154 or 164 and cannula 50. The cannula assembly 150 illustrated in Figure 8 further provides an assembly which permanently incorporates the piercing member 154 inside of the cannula 50 and prohibits the piercing member 154 from becoming imbedded in the vial stopper 78 upon withdrawal of the assembly 150. Rather, the piercing member 154 is retracted within the cannula 50 through a twist motion so that the spike point 156 of the piercing member 154 is retracted into and contained within flow channel 62 of cannula 50. After administration of the fluid from the syringe, the entire cannula assembly 150 can then be disposed of without the user coming in contact with the spike point 156 of the piercing member 154.

Figures 11 and 12 show a piercing member 174 having a tip 176 with a plurality of flexible fingers 178, creating an umbrella-like structure, as shown in Figure 11. Figure 12 shows another embodiment of the umbrella-like structure having a plurality of gaps 179 separating the fingers 178. Any number of fingers 178 and gaps 179 may be used without departing from the invention as long as they function as described below.

Upon insertion of these cannula assemblies into a drug vial stopper, the flexible fingers 178 will fold in or close. This allows the diameter at the base 180 of the tip 176 to be significantly greater than the diameter of the cannula. After complete insertion, the flexible fingers 178 will relax in a partially opened state. Upon withdrawal of such an assembly, the flexible fingers 178 will contact the underside of the stopper and fan out, causing the separation of the piercing member 174 from the cannula. An advantage of this embodiment is to prevent the inadvertent withdrawal of the piercing member 174 from the vial.

From the description of these various embodiments, it is clear that numerous modifications to the cannula assembly come to mind without significantly departing from the spirit or the invention, and the scope of protection is only limited by the scope of the accompanying claims.

THE CLAIMS DEFINING THE INVENTION ARE AS FOLLOWS:-

1. A cannula assembly comprising a blunt cannula having a flow channel and a piercing member adapted to pierce a solid closure or stopper, said piercing member including

(i) a tip having a penetrating member at its distal end,

(ii) a flexible, curved shaft extending from the tip inserted into the flow channel by straightening the shaft and retained therein by a friction fit between the curved shaft and the flow channel,

(iii) means allowing fluid to flow through the flow channel when the shaft is retained in the flow channel.

2. A cannula assembly according to claim 1 wherein the shaft is generally cylindrical.

3. A cannula assembly substantially as hereinbefore described with reference to Fig. 10 of the accompanying drawings.

Dated this 30 day of April 1998.

BAXTER INTERNATIONAL INC
Patent Attorneys for the Applicants:
PETER MAXWELL & ASSOCIATES

AUSTRALIAN PATENT OFFICE

55371/96
PCT/US96/04775

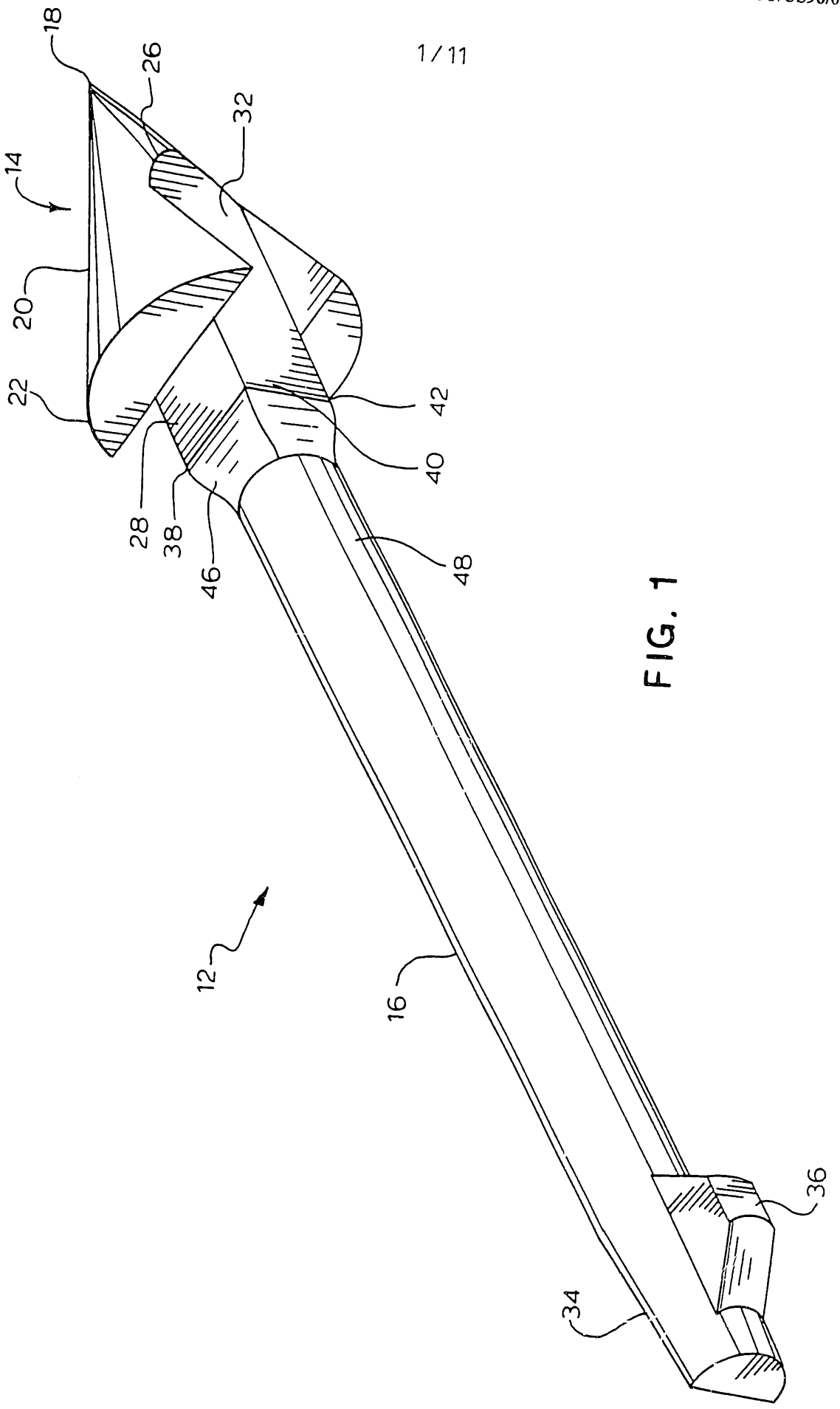

FIG. 1

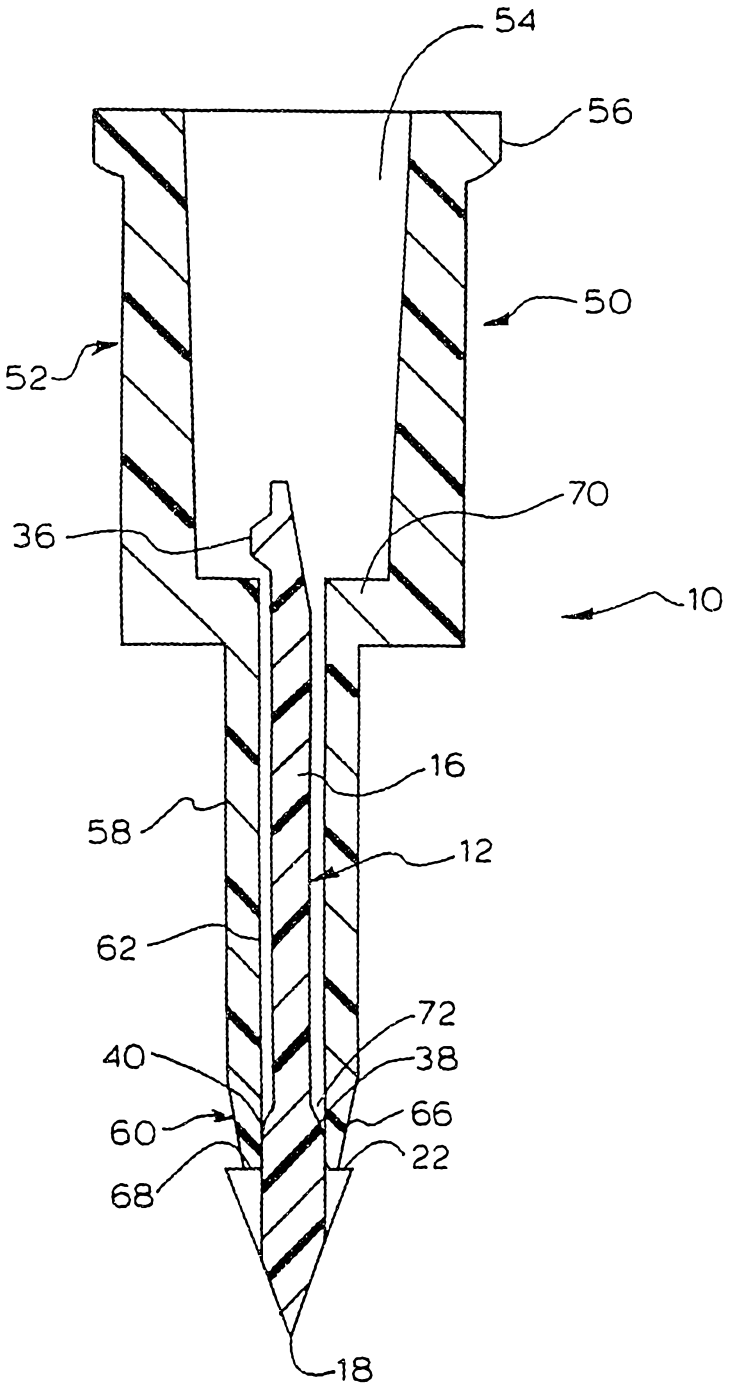

FIG. 2

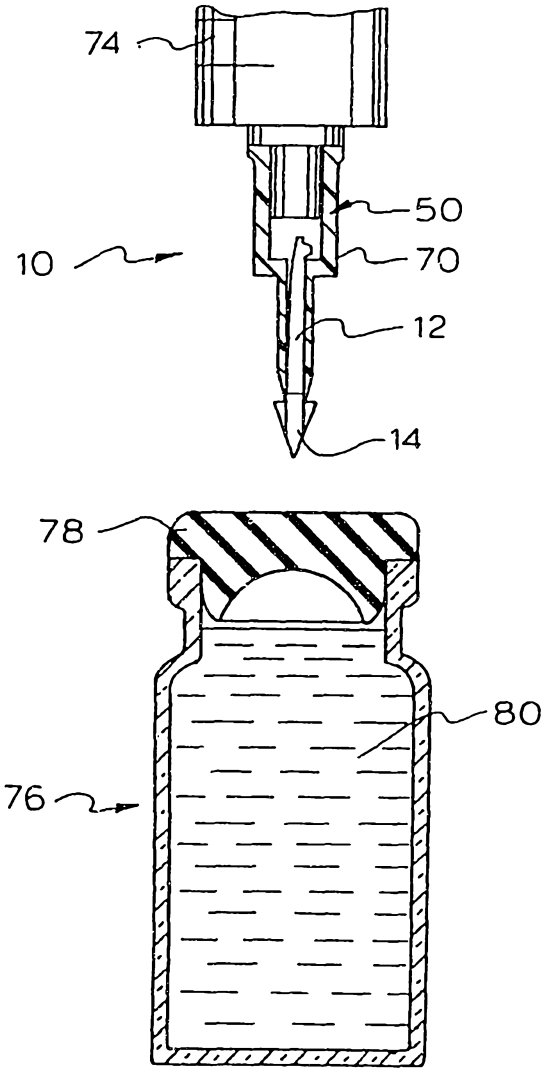

FIG. 3a

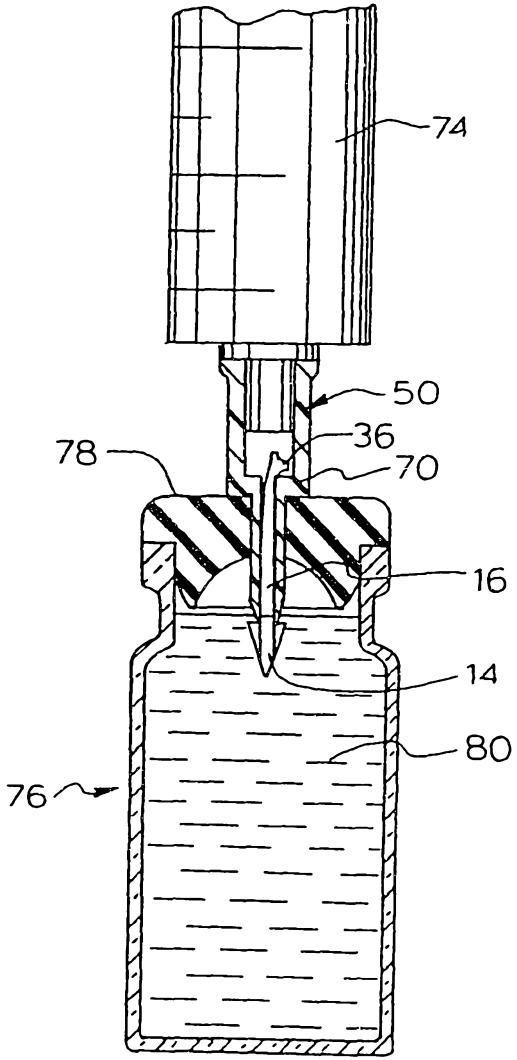

FIG. 3b

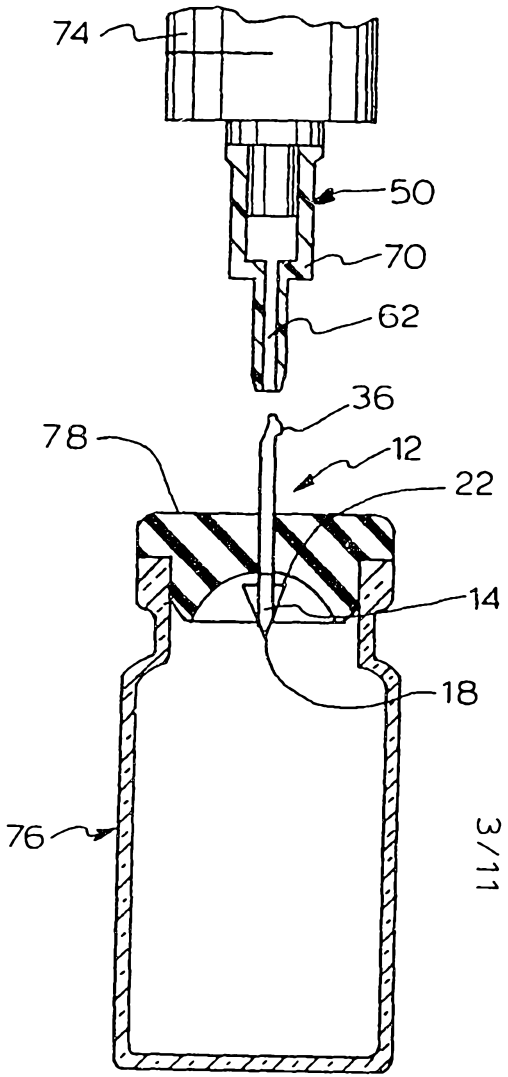

FIG. 3c

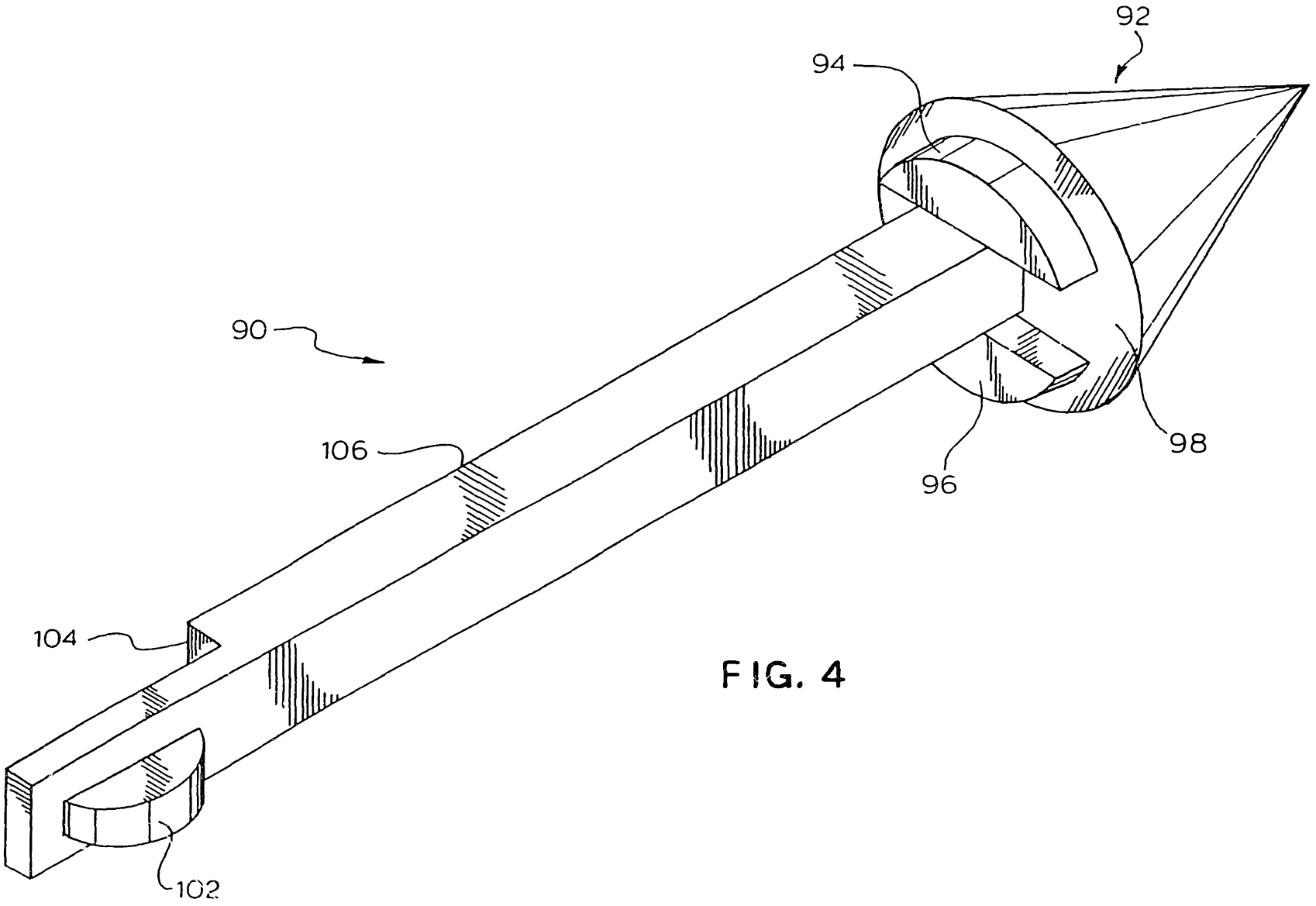

FIG. 4

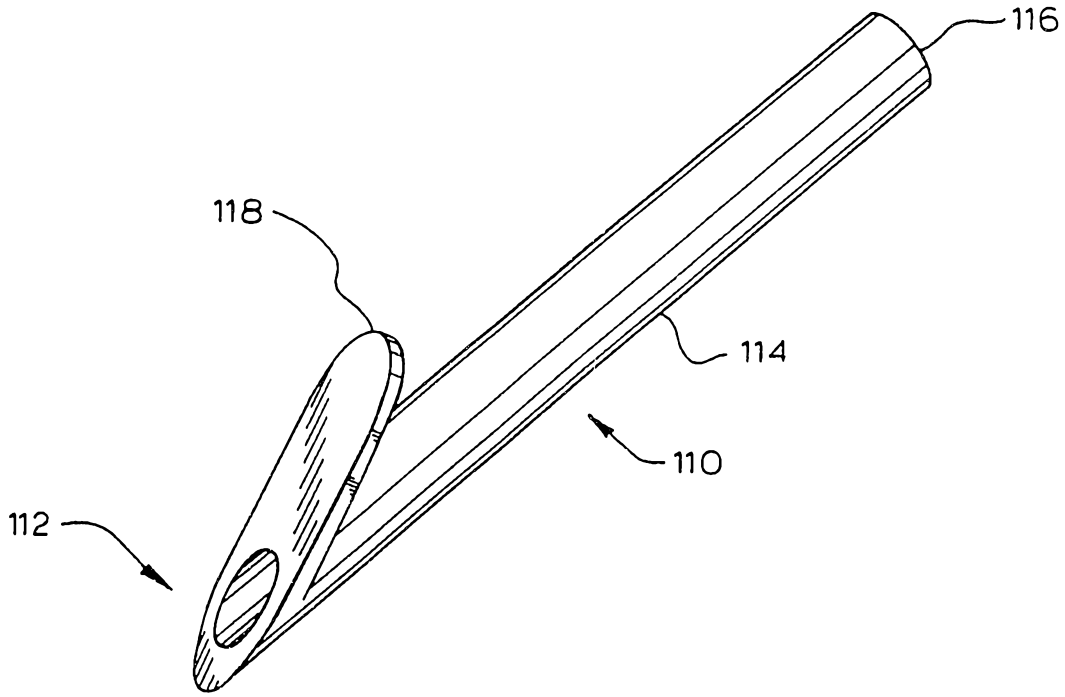

FIG. 5

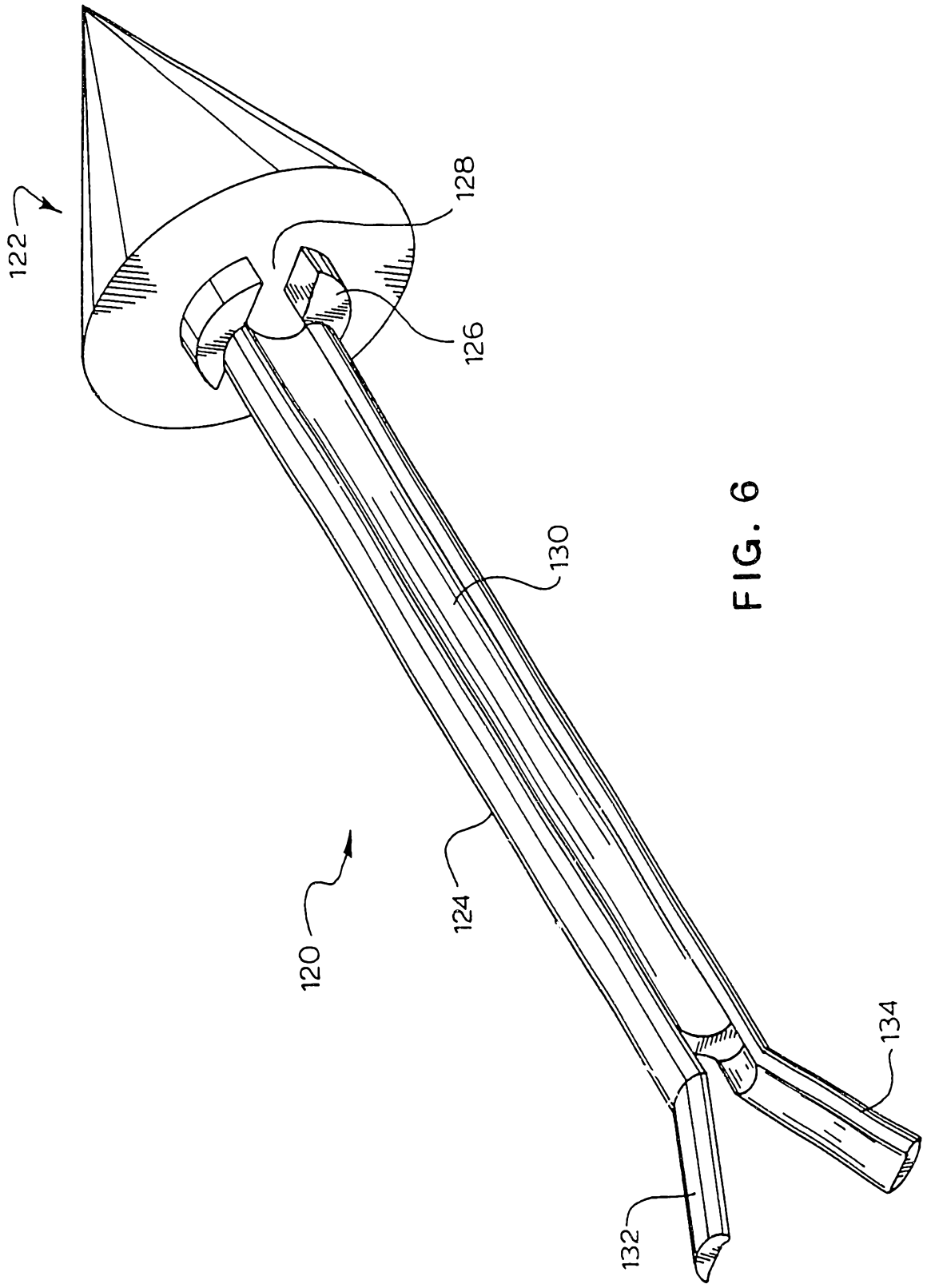

FIG. 6

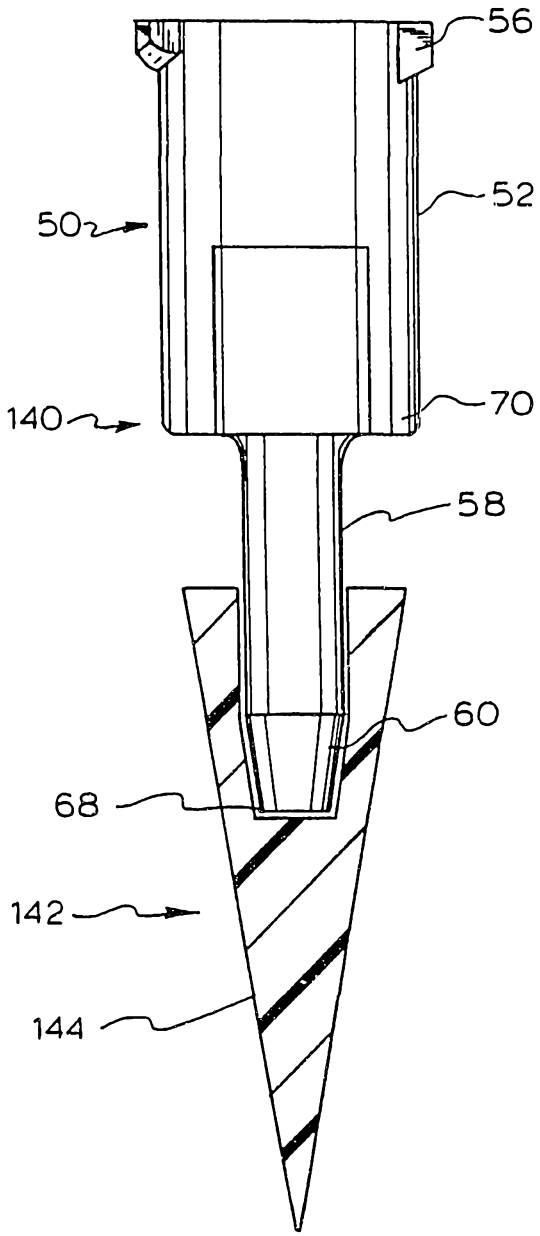

FIG. 7

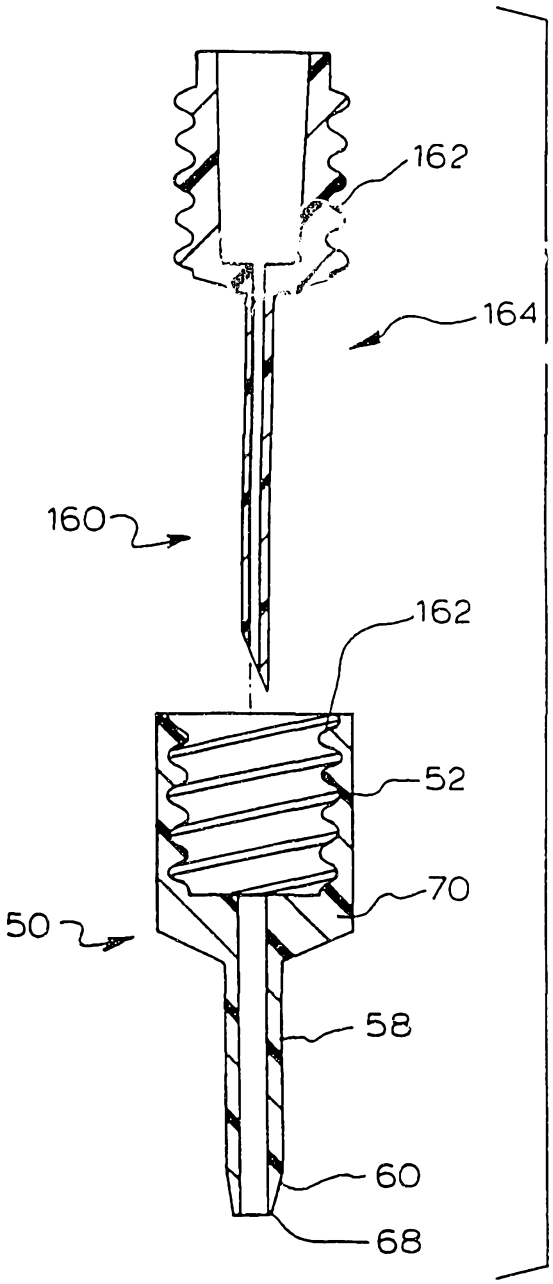

FIG. 9

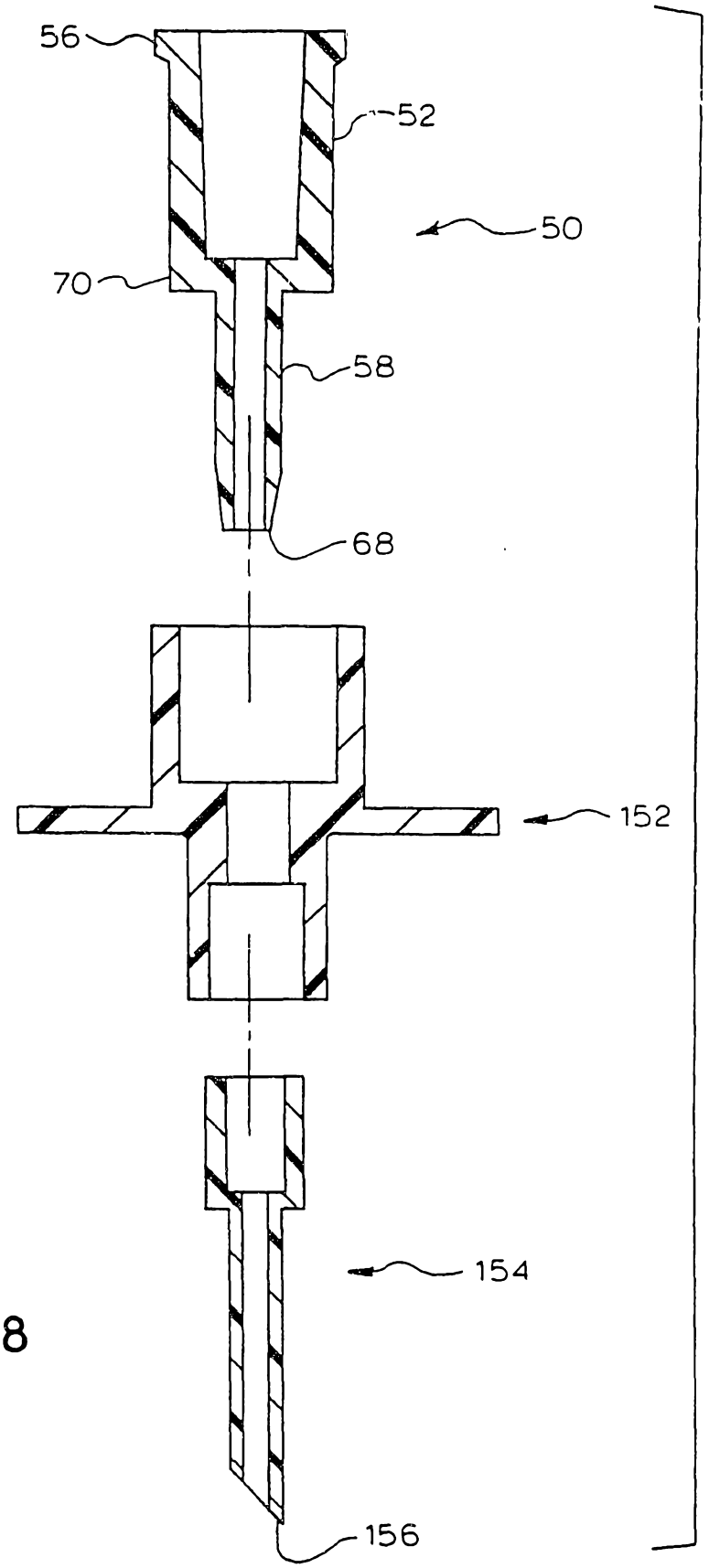

FIG. 8

55371 | 96

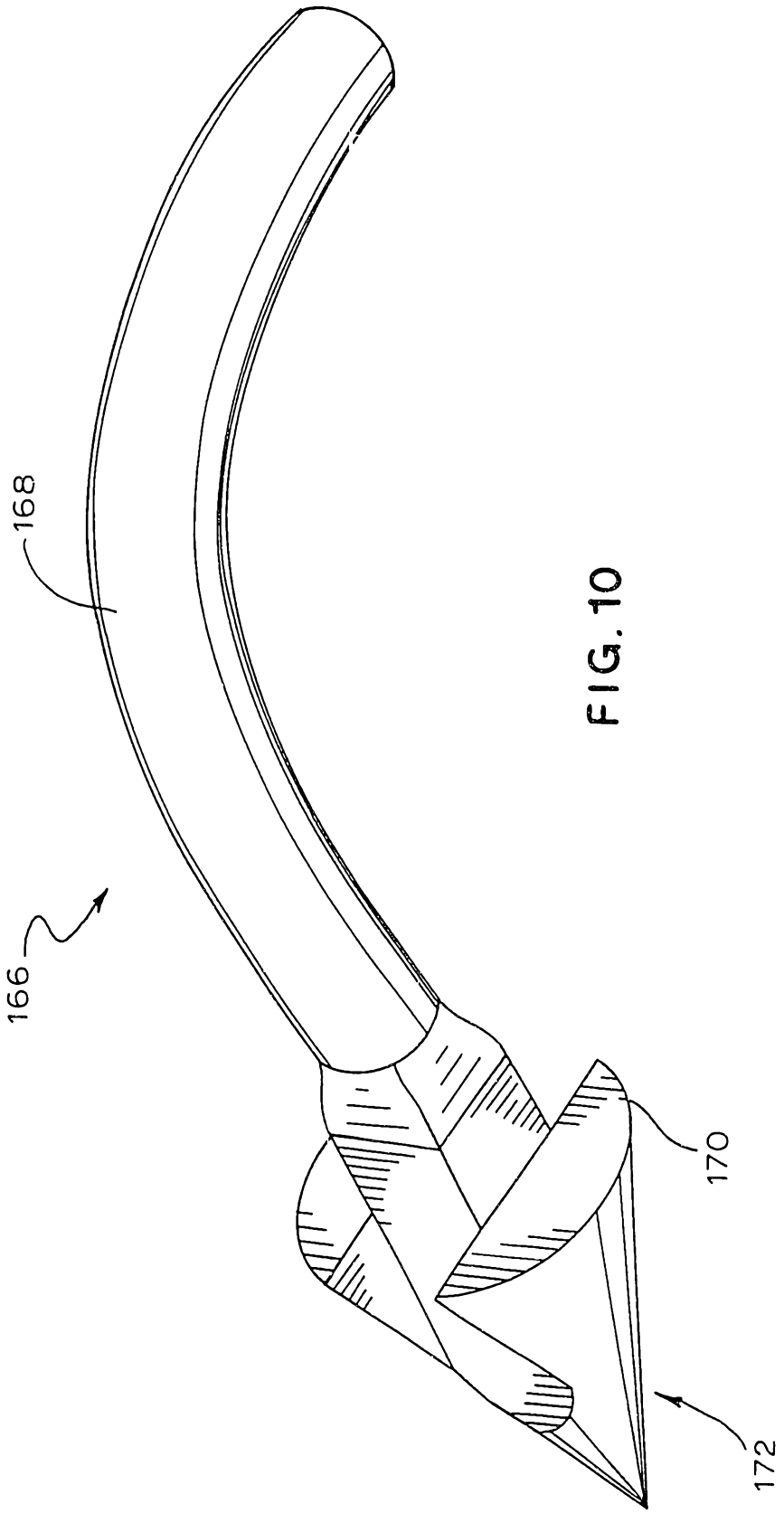

FIG. 10

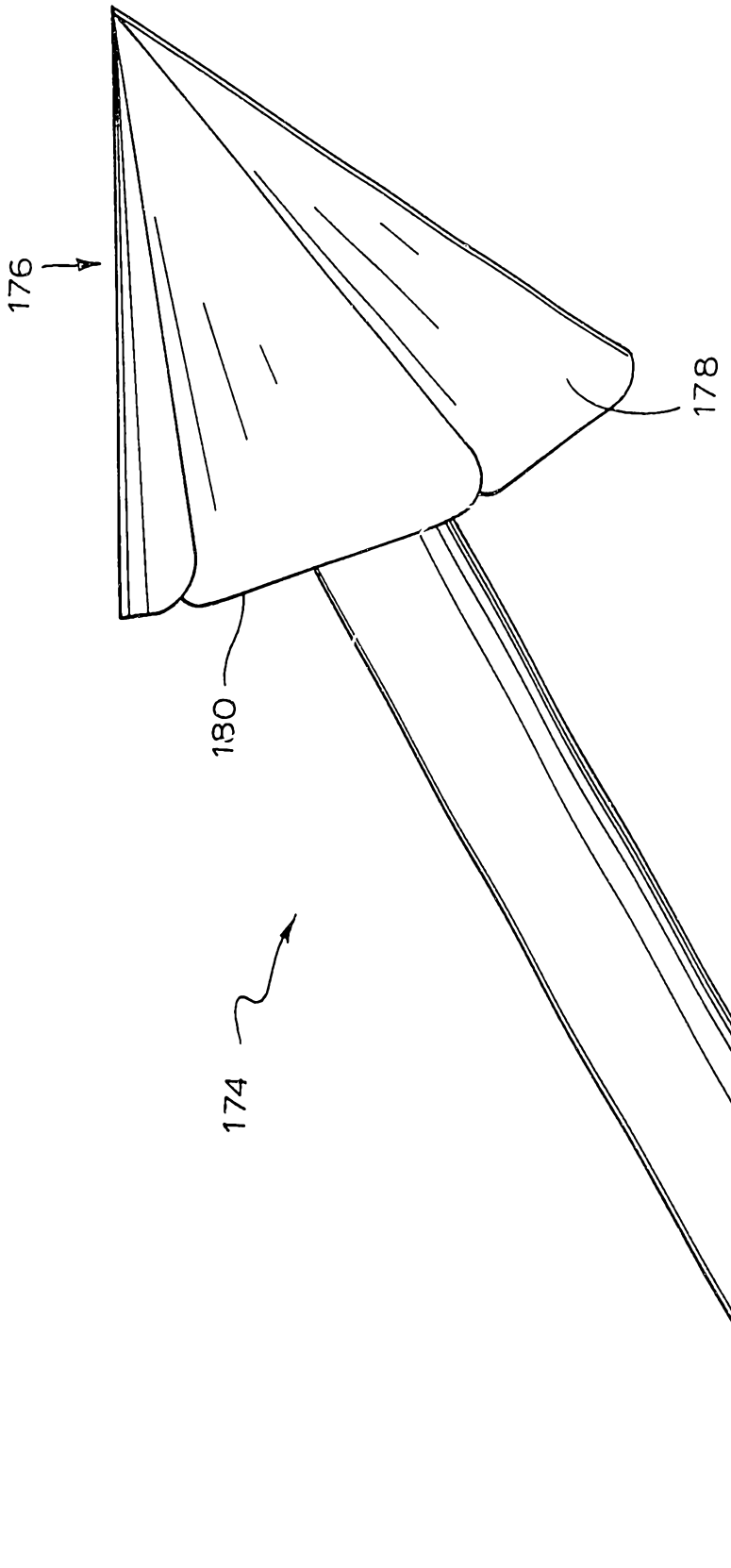

FIG. 11

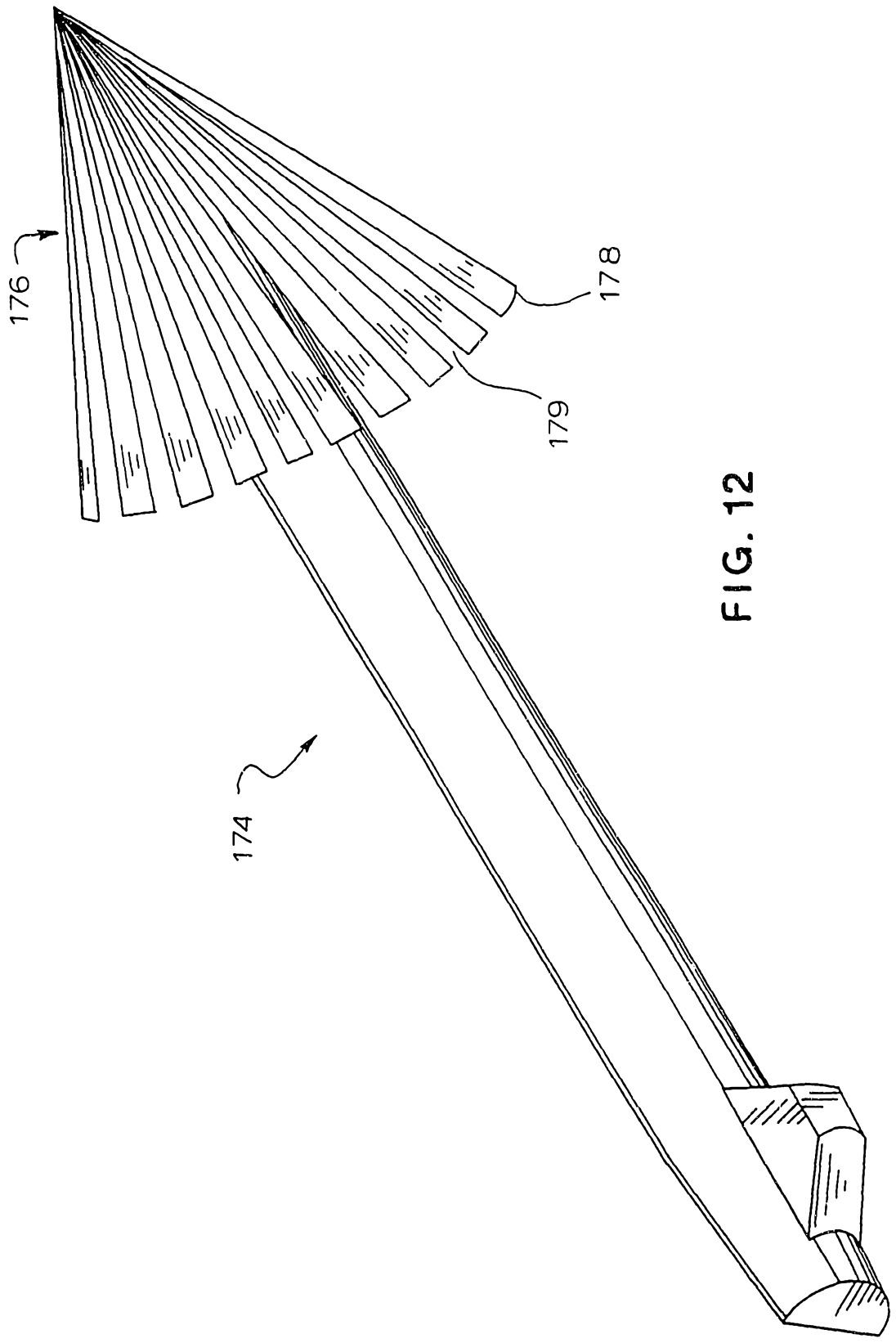

FIG. 12

INTERNATIONAL SEARCH REPORT

International application No.
PCT/US96/04775

A. CLASSIFICATION OF SUBJECT MATTER
IPC(6) :A61M 7/00
US CL :604/411
According to International Patent Classification (IPC) or to both national classification and IPC

B. FIELDS SEARCHED

Minimum documentation searched (classification system followed by classification symbols)

U.S. : 215/247; 604/87, 88, 164, 166, 184, 185, 283, 200-206, 411-415

Documentation searched other than minimum documentation to the extent that such documents are included in the fields searched

NONE

Electronic data base consulted during the international search (name of data base and, where practicable, search terms used)

NONE

C. DOCUMENTS CONSIDERED TO BE RELEVANT

Category*	Citation of document, with indication, where appropriate, of the relevant passages	Relevant to claim No.
Y	US, A, 4,589,879 (PEARSON) 20 May 1986, see entire document.	1-29

☐ Further documents are listed in the continuation of Box C. ☐ See patent family annex.

*	Special categories of cited documents.	"T"	later document published after the international filing date or priority date and not in conflict with the application but cited to understand the principle or theory underlying the invention
"A"	document defining the general state of the art which is not considered to be part of particular relevance	"X"	document of particular relevance; the claimed invention cannot be considered novel or cannot be considered to involve an inventive step when the document is taken alone
"E"	earlier document published on or after the international filing date	"Y"	document of particular relevance; the claimed invention cannot be considered to involve an inventive step when the document is combined with one or more other such documents, such combination being obvious to a person skilled in the art
"L"	document which may throw doubts on priority claim(s) or which is cited to establish the publication date of another citation or other special reason (as specified)	"&"	document member of the same patent family
"O"	document referring to an oral disclosure, use, exhibition or other means		
"P"	document published prior to the international filing date but later than the priority date claimed		

Date of the actual completion of the international search
08 JULY 1996

Date of mailing of the international search report
06 AUG 1996

Name and mailing address of the ISA/US
Commissioner of Patents and Trademarks
Box PCT
Washington, D.C. 20231
Facsimile No. (703) 305-3590

Authorized officer
WILLIAM LEWIS
Telephone No. (703) 308-0060

Form PCT/ISA/210 (second sheet)(July 1992)*