US00RE45655E

(19) **United States**

(12) **Reissued Patent**

**Kolar et al.**

(10) **Patent Number: US RE45,655 E**

(45) **Date of Reissued Patent: *Aug. 18, 2015**

(54) **SEALING ENCLOSURE FOR A BLENDER**

(71) Applicants: **David J Kolar**, Stow, OH (US); **Stephen P. Rukavina**, Rocky River, OH (US)

(72) Inventors: **David J Kolar**, Stow, OH (US); **Stephen P. Rukavina**, Rocky River, OH (US)

(73) Assignee: **Vita-Mix Corporation**, Olmsted Township, OH (US)

( * ) Notice: This patent is subject to a terminal disclaimer.

(21) Appl. No.: **13/893,531**

(22) Filed: **May 14, 2013**

**Related U.S. Patent Documents**

Reissue of:

(64) Patent No.: **8,087,603**
Issued: **Jan. 3, 2012**
Appl. No.: **12/460,592**
Filed: **Jul. 22, 2009**

U.S. Applications:

(60) Provisional application No. 61/189,172, filed on Aug. 15, 2008, provisional application No. 61/209,063, filed on Mar. 2, 2009.

(51) **Int. Cl.**
***A47J 43/046*** (2006.01)

(52) **U.S. Cl.**
CPC ..... ***A47J 43/046*** (2013.01)

(58) **Field of Classification Search**
CPC ..... A47J 43/046
USPC ..... 241/285.3, 282.1, 282.2; 366/347; 181/198
See application file for complete search history.

(56) **References Cited**

U.S. PATENT DOCUMENTS

| | | | | |
|---|---|---|---|---|
| 3,175,594 | A * | 3/1965 | Jepson et al. | 241/199.12 |
| D237,503 | S | 11/1975 | Langmack, Jr. et al. | D26/5 R |
| D249,870 | S | 10/1978 | Tillander | D9/224 |
| D295,012 | S | 4/1988 | Gelber | D7/378 |
| 4,822,175 | A | 4/1989 | Barnard et al. | 366/347 |
| D301,824 | S | 6/1989 | Machuron | D7/384 |
| 4,883,144 | A | 11/1989 | Haushalter et al. | 181/198 |
| D321,647 | S | 11/1991 | Oldorf | D9/432 X |
| 5,533,797 | A | 7/1996 | Gelber | 312/138.1 |
| D406,154 | S | 2/1999 | Copland et al. | D15/82 |
| 5,957,577 | A | 9/1999 | Dickson et al. | 366/197 |
| D426,423 | S | 6/2000 | Lee | D7/384 |

(Continued)

FOREIGN PATENT DOCUMENTS

WO WO 2005/051149 9/2005

OTHER PUBLICATIONS

PCT International Preliminary Report and Written Opinion (7 pages—dated Feb. 24, 2011).

(Continued)

*Primary Examiner* — Mark Rosenbaum

(74) *Attorney, Agent, or Firm* — McDonald Hopkins LLC

(57) **ABSTRACT**

An enclosure for a blender including a body portion adapted to be secured to a base, and a cover pivotally attached to the body portion. The body portion includes sidewalls, a back wall, and an abbreviated top wall. The cover includes sidewalls, a front wall, a top wall, and an abbreviated back wall. A flange extends outwardly from the sidewalls and the top wall of the body portion and a gasket is provided thereon to create a seal between the cover and the body portion of the enclosure.

**20 Claims, 9 Drawing Sheets**

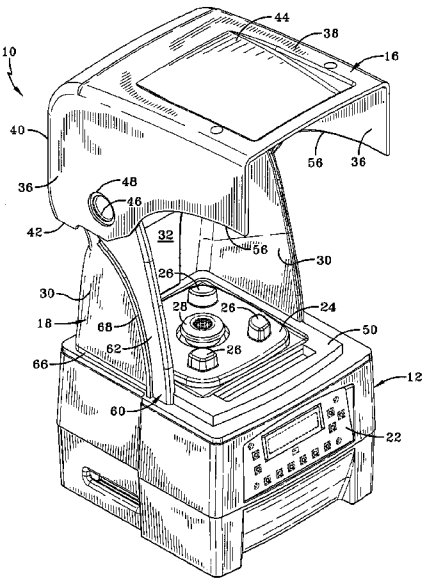

(56) **References Cited**

U.S. PATENT DOCUMENTS

| | | | | |
|---|---|---|---|---|
| D427,016 | S | 6/2000 | Kindig et al. | D7/412 |
| D428,564 | S | 7/2000 | Kao | D7/374 |
| D432,864 | S | 10/2000 | Kindig et al. | D7/412 |
| D466,761 | S | 12/2002 | Baerenrodt et al. | D7/378 |
| D471,059 | S | 3/2003 | Chuang | D7/374 |
| 6,571,908 | B2 | 6/2003 | Bohannon et al. | 181/198 |
| D526,845 | S * | 8/2006 | Katz et al. | D7/412 |
| D528,364 | S | 9/2006 | Kolar et al. | D7/413 |
| 8,287,180 | B2 * | 10/2012 | Kolar et al. | 366/347 |
| 2003/0034200 | A1 | 2/2003 | Bohannon et al. | 181/202 |

OTHER PUBLICATIONS

Q Series—Blendtec (May 2006—2 pages).

Xtreme—Waring (2006—2 pages).

Blendtec Operations Manual—Blendtec (Apr. 2006—15 sheets).

Summit Operation Manual—Hamilton Beach (Nov. 2007—pp. 1, 4, 6, 7, 8.

PCT International Search Report (9 pages—Oct. 26, 2009).

* cited by examiner

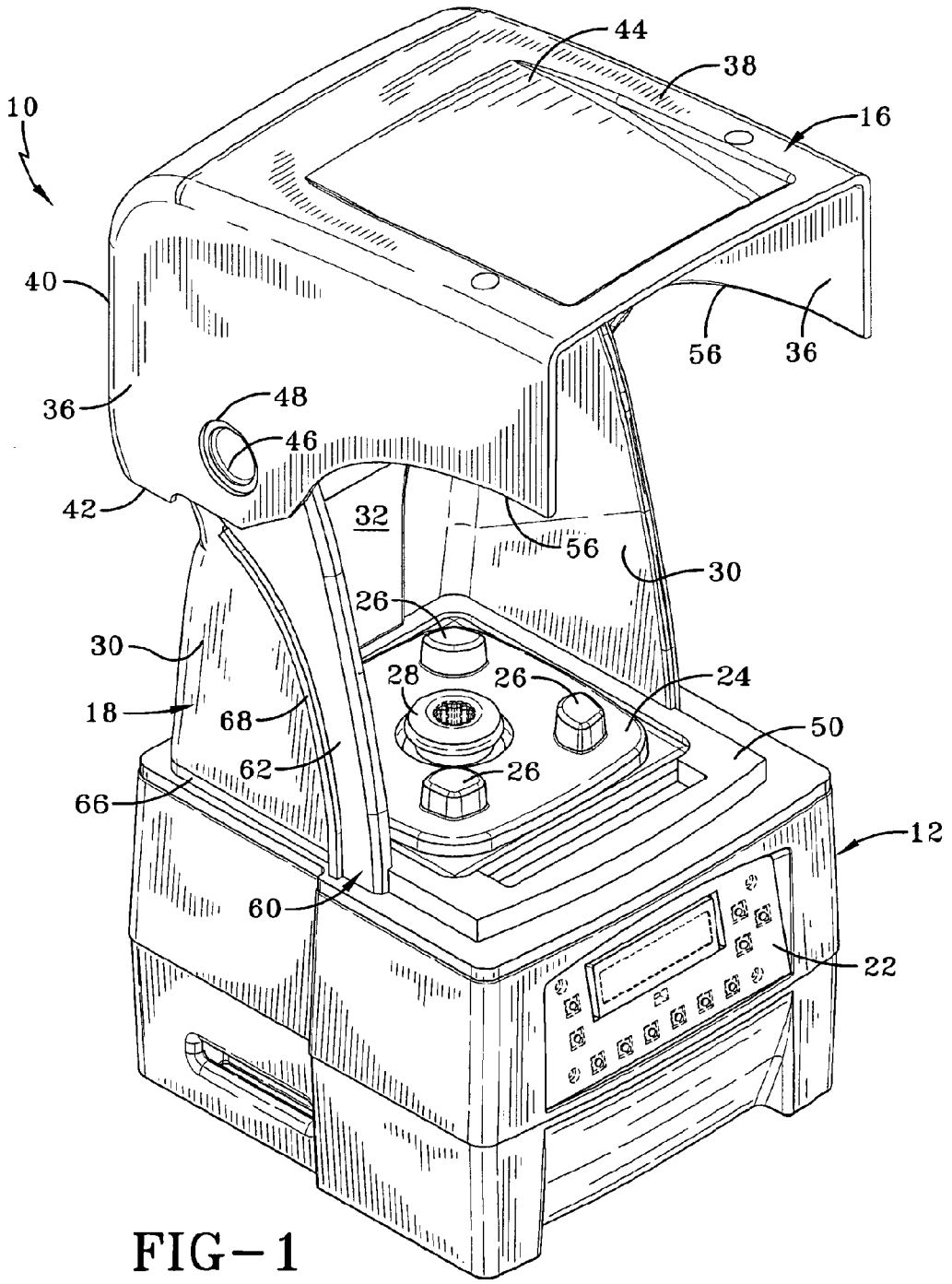
10
44
38
16
40
56
36
36
48
46
42
32
56
30
26
30
28
26
24
18
68
50
62
26
66
12
60
22

FIG–1

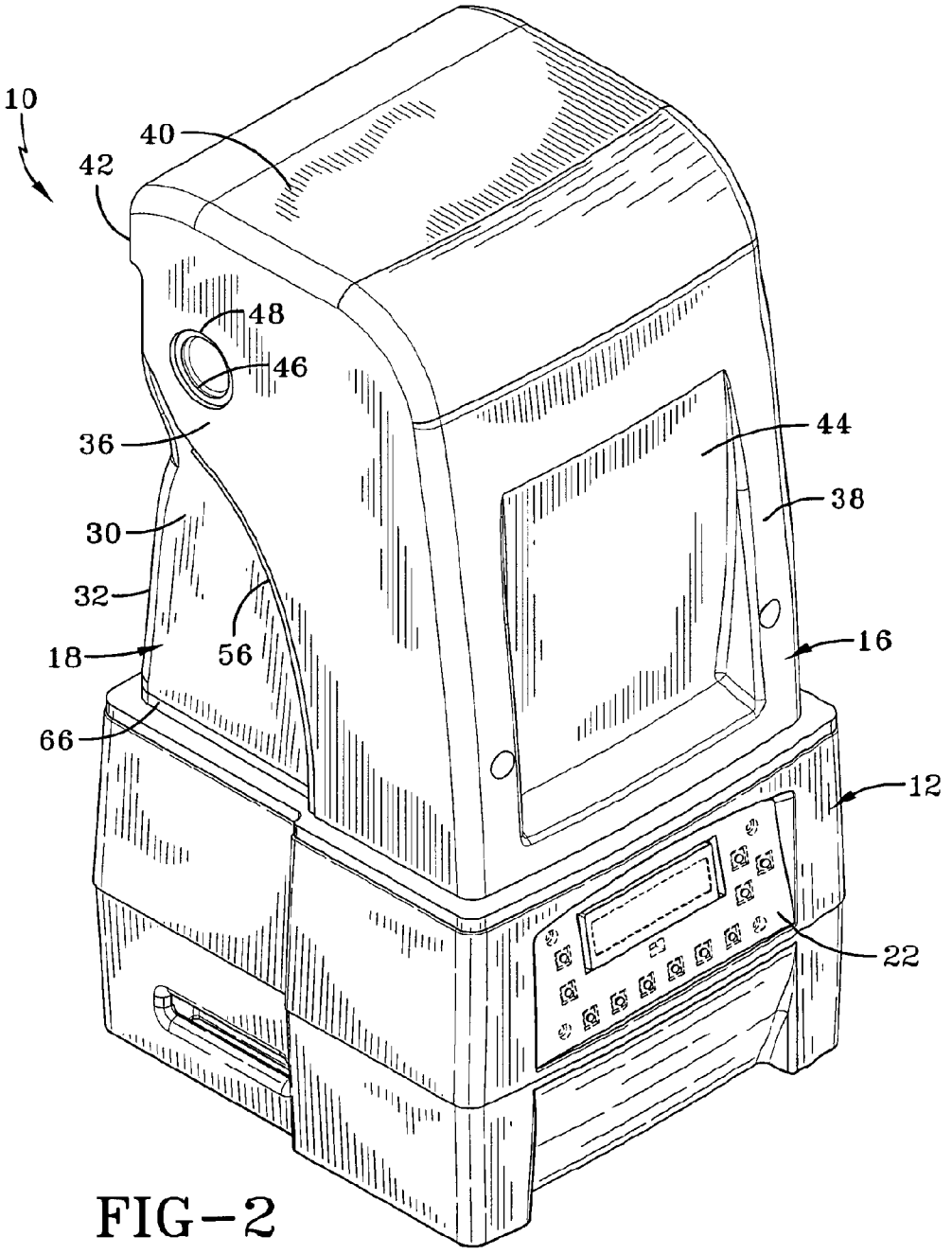


FIG-2

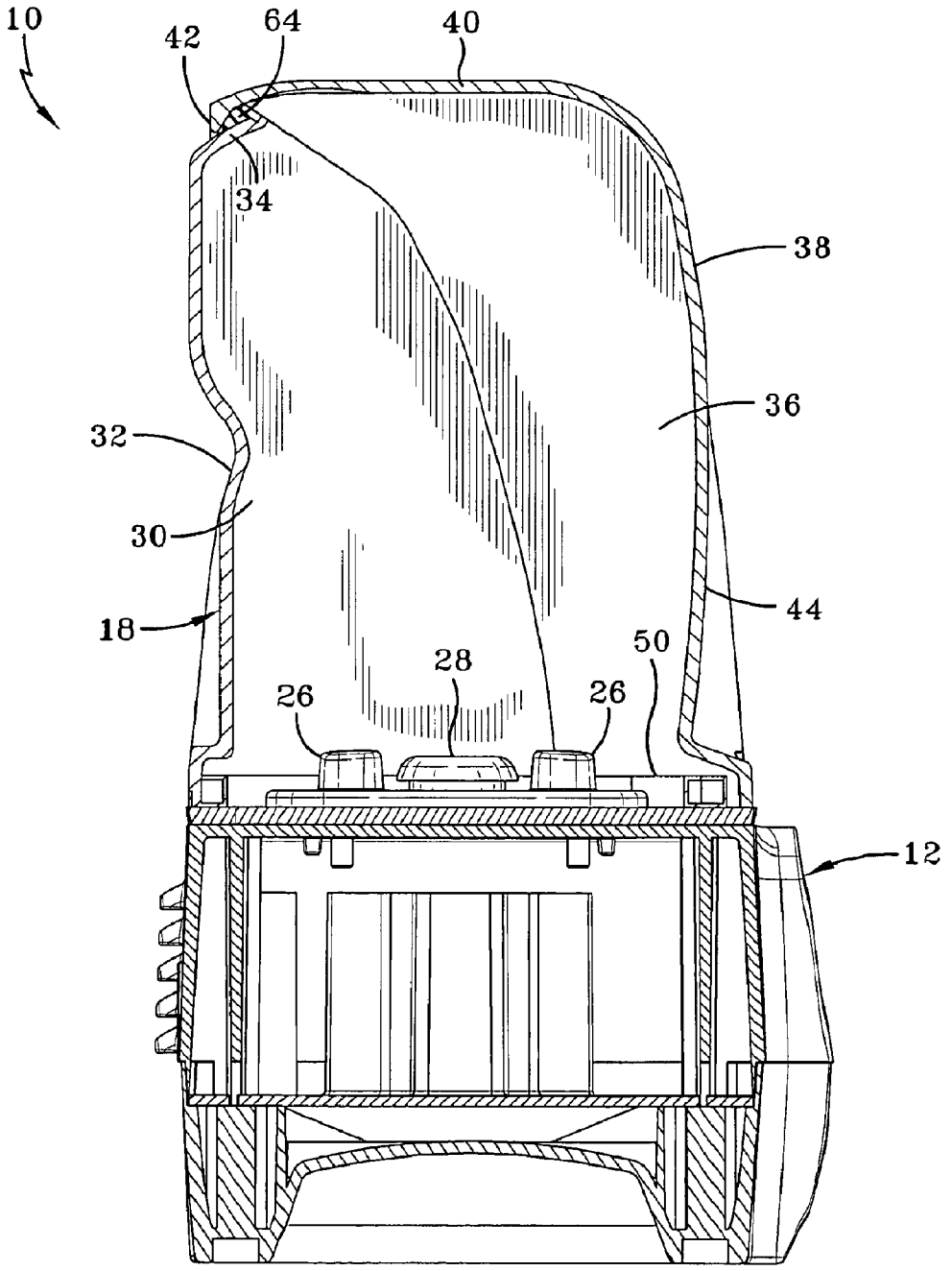


FIG-3

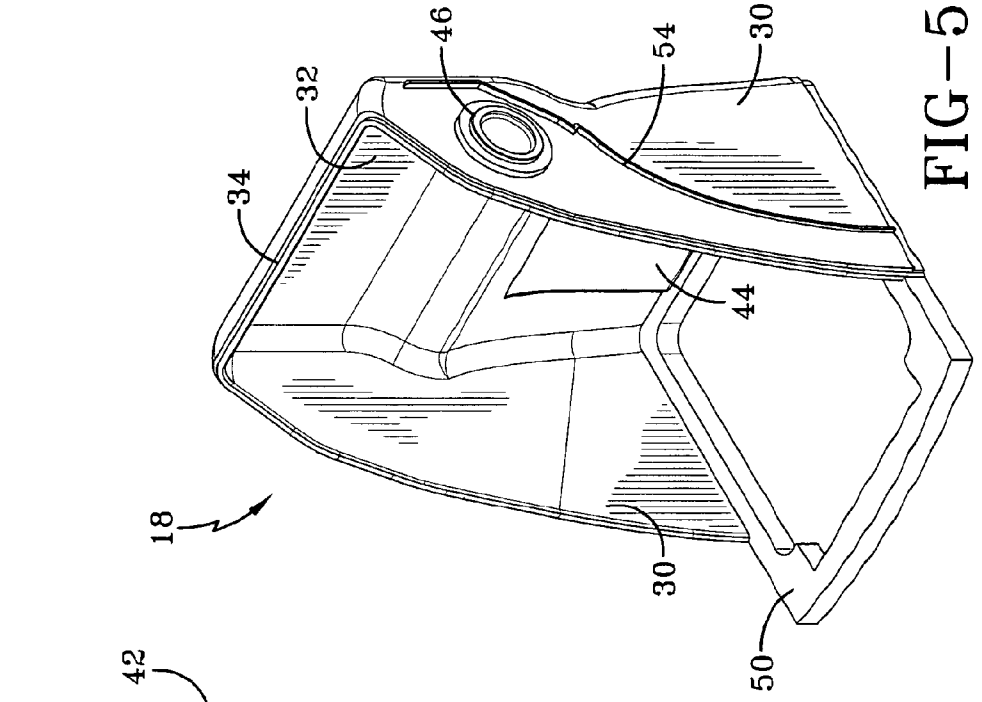


FIG-5

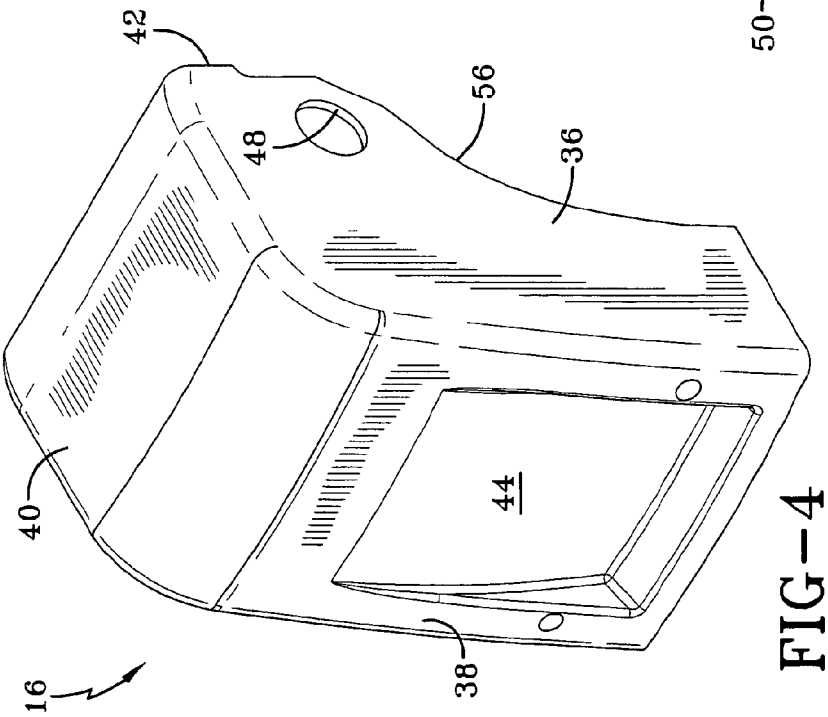


FIG-4

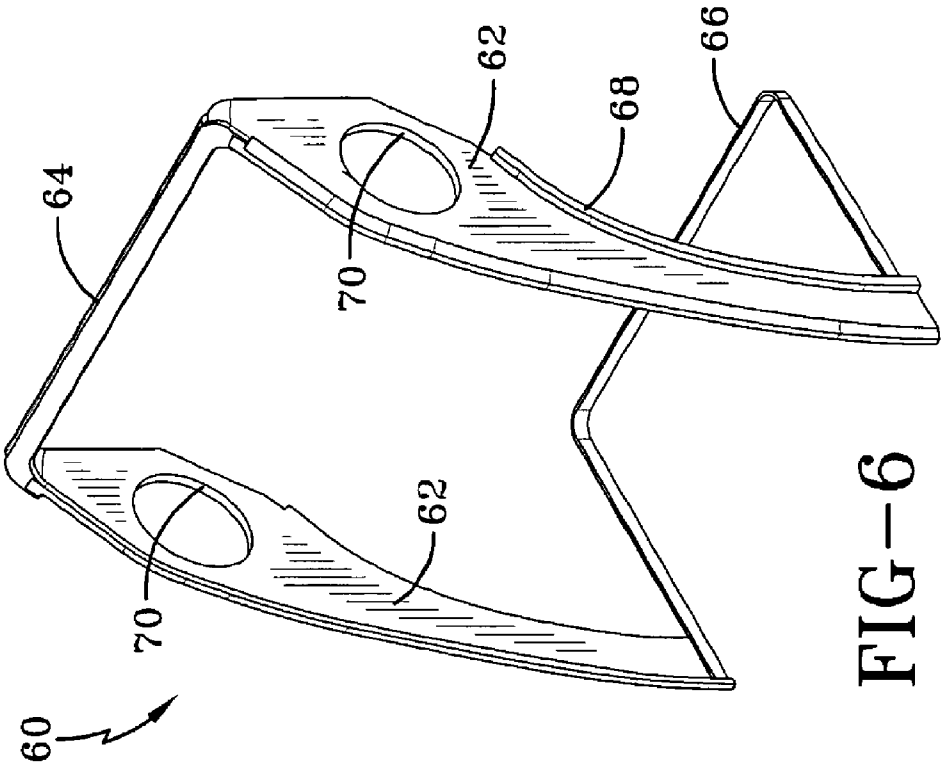


FIG-6

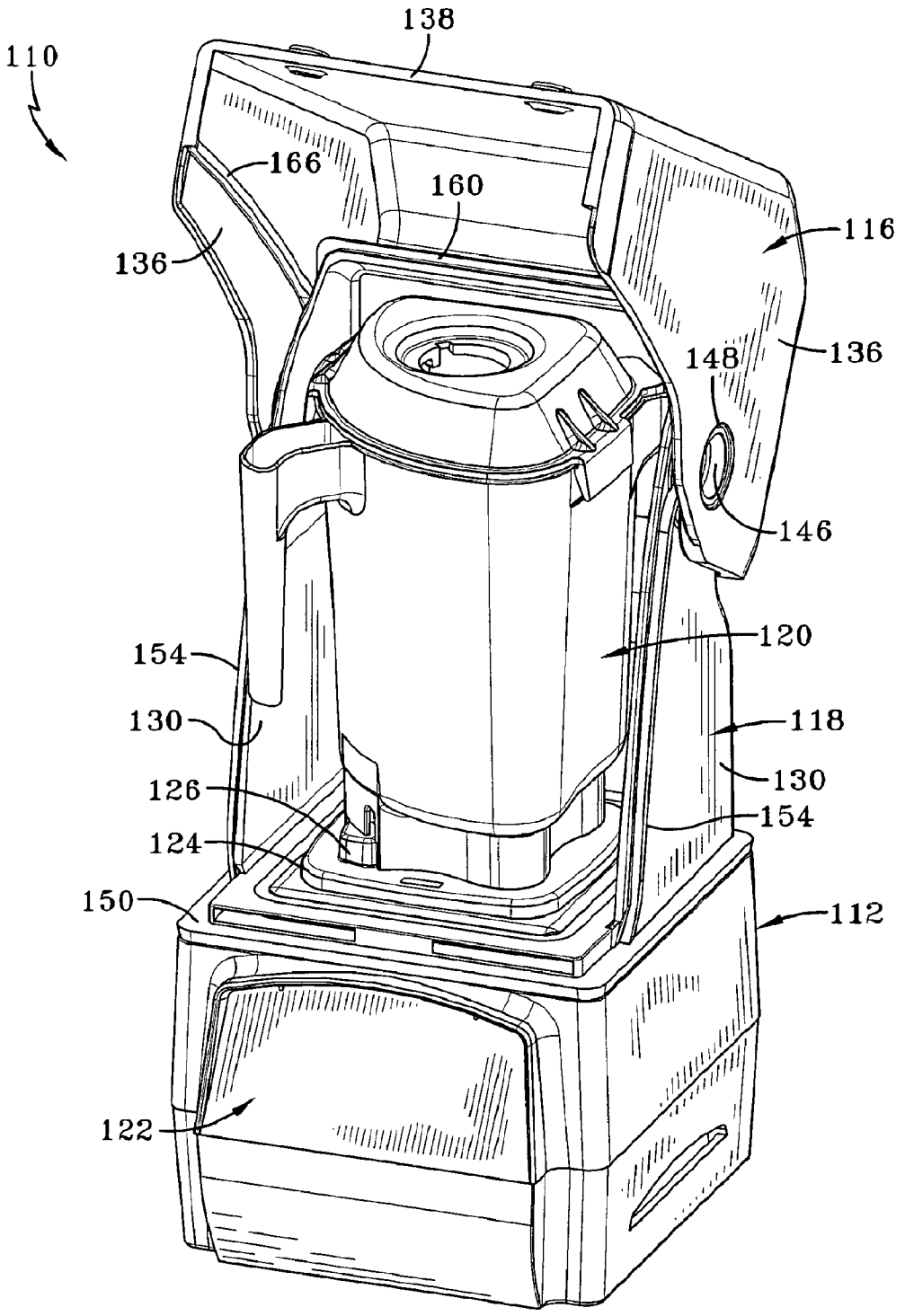
110
138
166
160
116
136
148
136
146
154
120
130
118
126
130
124
154
150
112
122

FIG-7

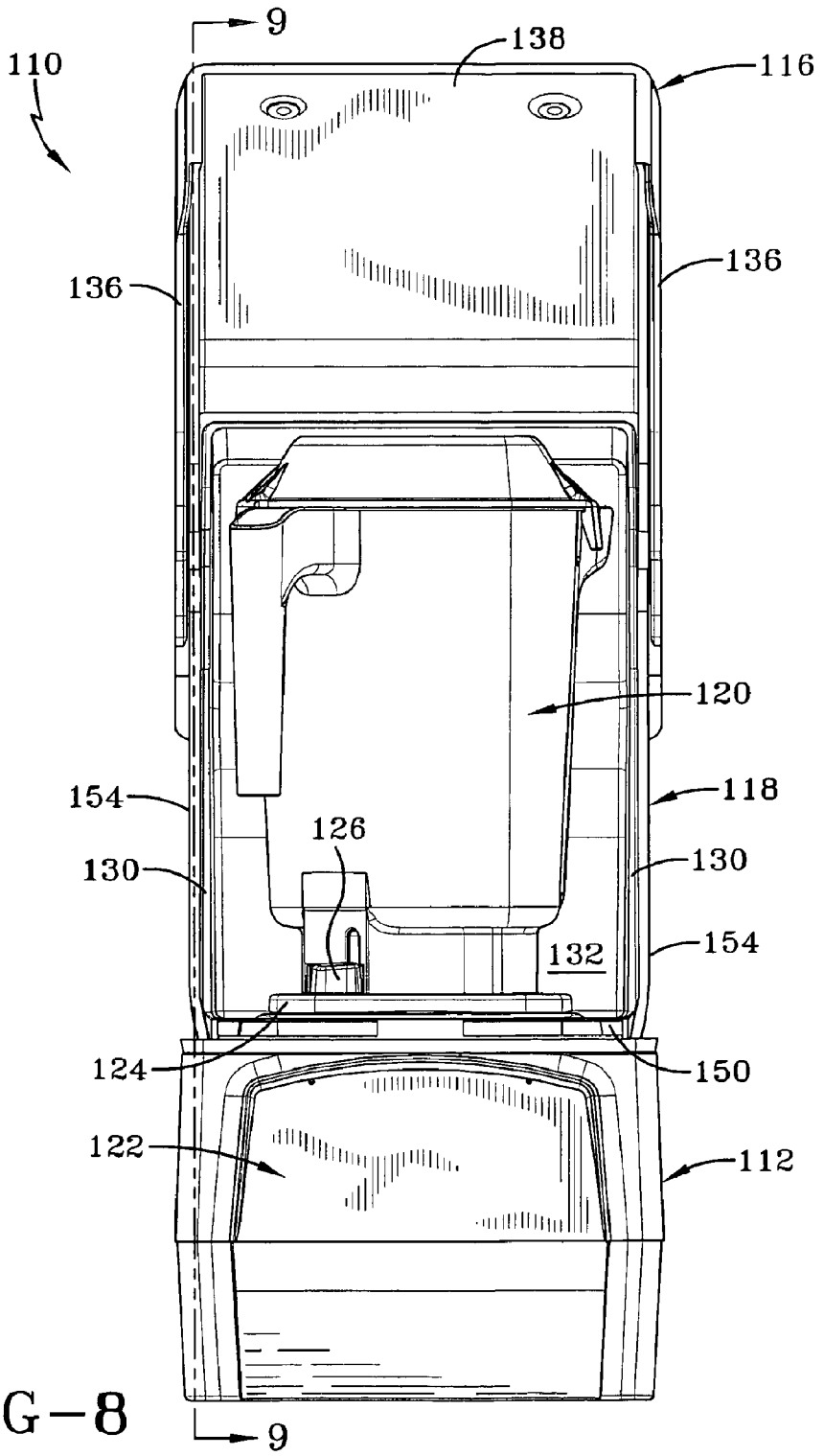
9
138
110
116
136
136
120
154
118
126
130
130
154
132
124
150
122
112
9

FIG-8

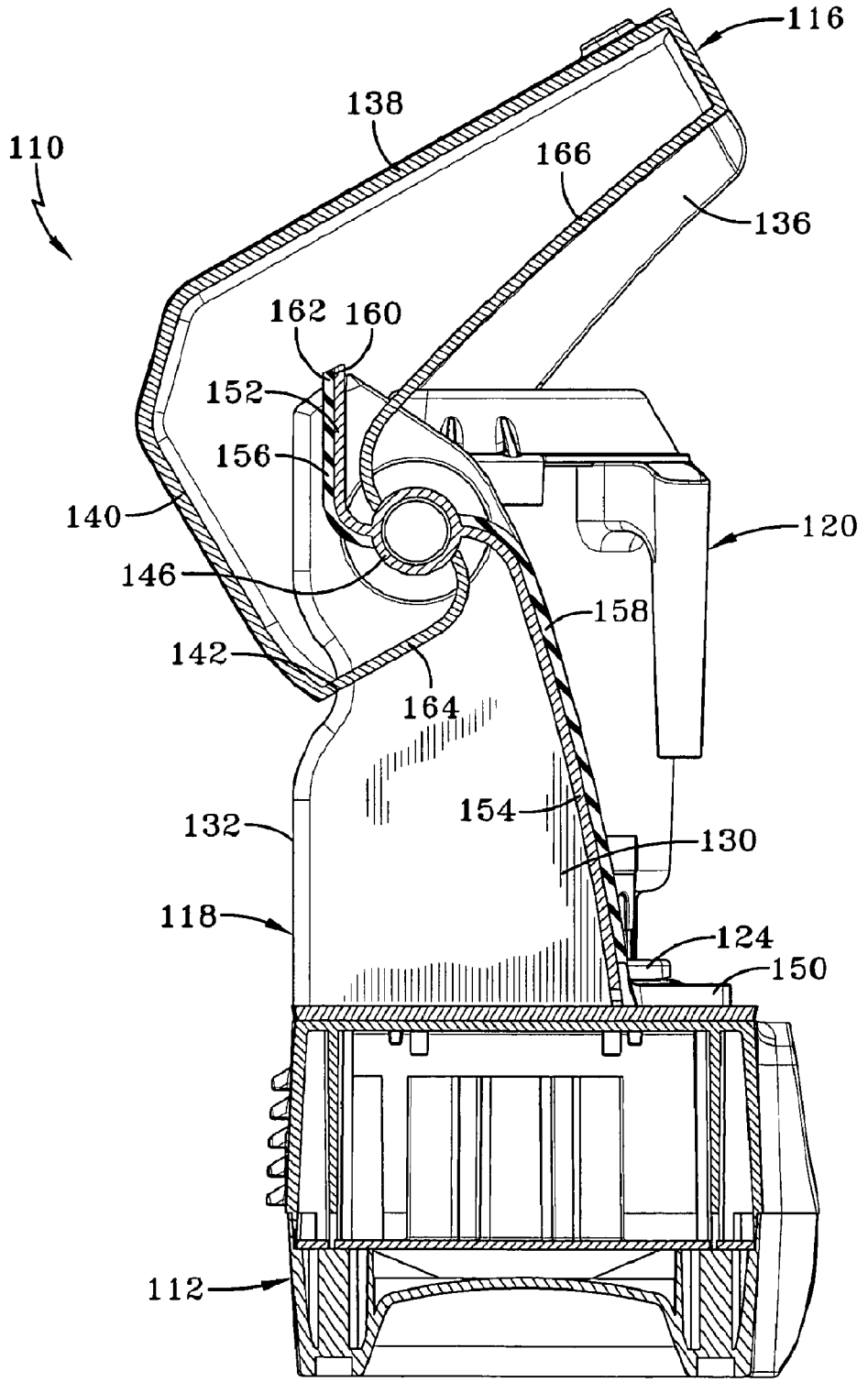
116
138
110
166
136
162
160
152
156
140
120
146
158
142
164
154
132
130
118
124
150
112

FIG–9

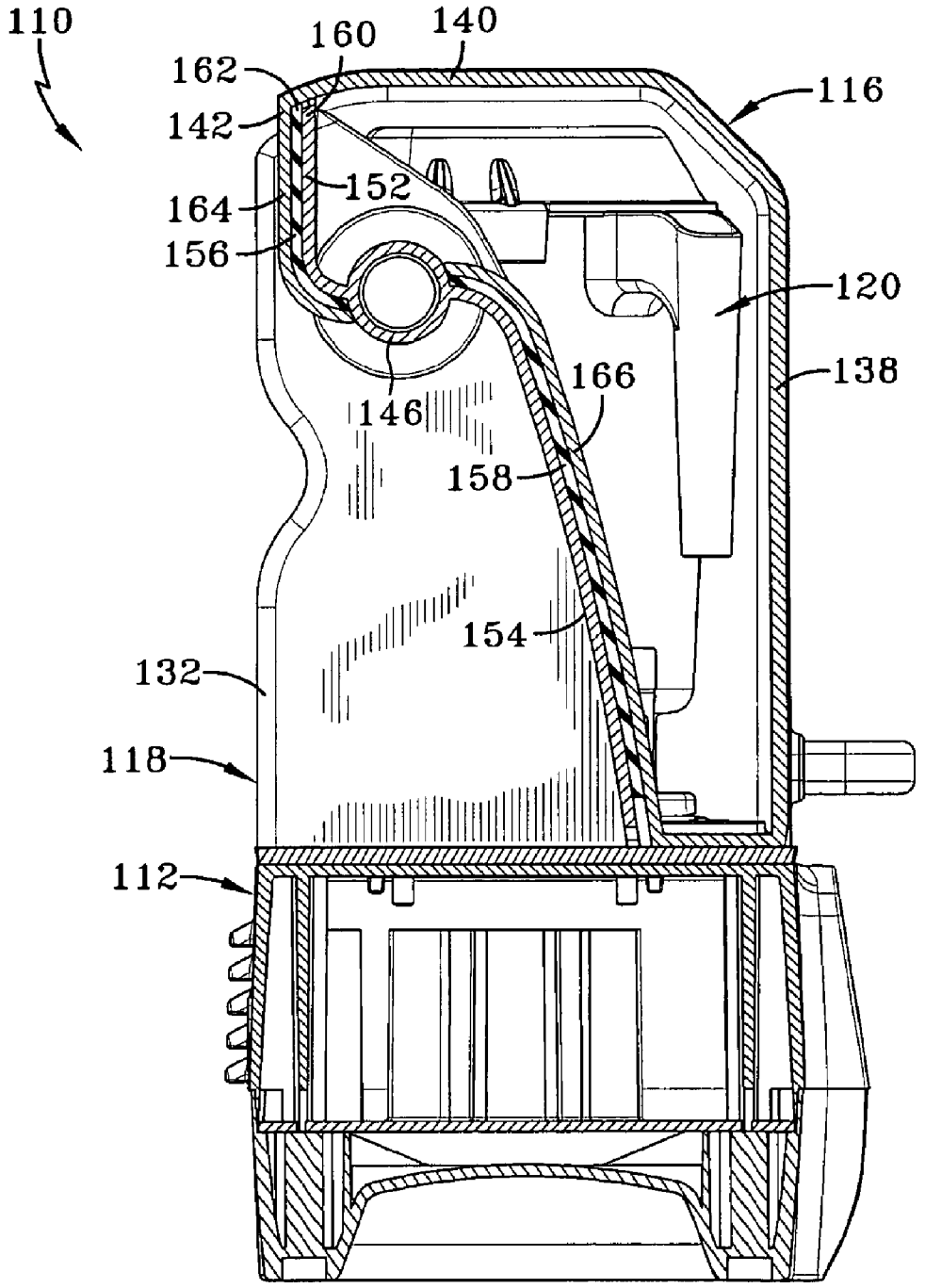
110
160
140
162
116
142
152
164
156
120
138
166
146
158
154
132
118
112

FIG-10

# SEALING ENCLOSURE FOR A BLENDER

**Matter enclosed in heavy brackets [ ] appears in the original patent but forms no part of this reissue specification; matter printed in italics indicates the additions made by reissue; a claim printed with strikethrough indicates that the claim was canceled, disclaimed, or held invalid by a prior post-patent action or proceeding.**

## CROSS-REFERENCE TO RELATED APPLICATIONS

This application claims priority from U.S. Provisional Application No. 61/189,172 filed Aug. 15, 2008, and U.S. Provisional Application No. 61/209,063 filed Mar. 2, 2009, both of which are incorporated herein by reference.

## TECHNICAL FIELD

This invention relates to an enclosure such as those which house a food processor to deaden the noise emanating therefrom. More particularly, this invention relates to such an enclosure having a main body and a cover, wherein the cover is hinged to the main body and an elastomeric seal is provided on the main body to create a sound reducing seal between the main body and the cover.

## BACKGROUND ART

A common problem associated with electric food processors, or blenders, is the noise generated when the food processor is running. The amount of noise generated by these devices is a result of both the blending taking place within the container of the blender, often involving the crushing of ice, as well as the noise vibrations that are generated by the electric motor of the blender. The noise levels generated by the food processor are particularly troublesome in commercial settings such as restaurants, food stands, and coffee shops, especially where the food processor is positioned near a customer service counter.

Enclosures are often provided for food processors to isolate the container and reduce the noise levels during operation. Such enclosures are well known in the art such as that shown, for example, in U.S. Pat. No. D427,016. These enclosures are designed to muffle the noise of the food processor during operation. Most enclosures are formed of two components, that is, a main body and a cover. The cover is usually hingedly attached to the main body of the enclosure which is attached to the base of the blender. The main body of the enclosure may secured to the base by a number of methods known in the art, such as, for example, by tongue and groove attachment, mechanical fasteners, or by magnetic means such as that disclosed in U.S. Provisional Patent Application No. 61/135,480. The base includes an electric motor and a control module which allows a user to start, stop, and adjust the speed of the food processor. When the container of the blender is positioned on the base, it may be accessed by pivoting the enclosure cover relative to its main body.

In many cases, conventional enclosures provide less than desired results in suppressing the noise levels of the food processor. The underperformance of the enclosure can be contributed at least, in part, to an ineffective seal between the main body and the cover of the enclosure. The lack of an effective seal allows noise to escape the enclosure, while also allowing the cover to vibrate against the main body, potentially creating an additional source of noise. These vibrations



are transferred from the electric motor in the base member of the food processor to the base member, and then to the main body of the enclosure.

Thus, the need exists for a food processor having an enclosure which is effective at significantly reducing noise levels created by operation of the food processor.

## DISCLOSURE OF THE INVENTION

It is thus an object of one aspect of the present invention to provide an enclosure for a food processor that reduces the noise level of the food processor during operation.

It is an object of another aspect of the present invention to provide an enclosure, as above, that provides a seal between the body portion and the pivoting cover of the enclosure.

These and other objects of the present invention, as well as the advantages thereof over existing prior art forms, which will become apparent from the description to follow, are accomplished by the improvements hereinafter described and claimed.

In general, an enclosure for a food processor according to the concepts of the present invention includes a body portion adapted to be secured to a base of the food processor and a cover pivotally secured to the body portion and movable between an open position and a closed position. A gasket is positioned between the cover and the body portion when the cover is in the closed position.

In accordance with at least one aspect of the present invention, an enclosure for a food processor includes a body portion adapted to be secured to a base of the food processor and a cover pivotally secured to the the body portion and movable between an open position and a closed position. The body portion includes opposed sidewalls, a rear wall extending between the sidewalls, and a top wall. A sealing gasket covers a portion of the sidewalls and the top wall of the body portion and is positioned between the body portion and the cover when the cover is in the closed position.

In accordance with at least one aspect of the present invention, an enclosure for a food processor includes a body portion adapted to be secured to a base of the food processor, the body portion having an outwardly extending flange. A cover is also provided and is pivotally secured to the body portion and is movable between an open position and a closed position. The cover has an inwardly extending flange. A gasket is positioned on the outwardly extending flange or the inwardly extending flange and is between and in contact with both the outwardly extending flange and the inwardly extending flange when the cover is in the closed position.

A preferred exemplary enclosure for a food processor according to the concepts of the present invention is shown by way of example in the accompanying drawings without attempting to show all the various forms and modifications in which the invention might be embodied, the invention being measured by the appended claims and not by the details of the specification.

## BRIEF DESCRIPTION OF THE DRAWINGS

FIG. **1** is a perspective view of a food processor and enclosure according to one embodiment of the present invention showing the enclosure in an open position.

FIG. **2** is a perspective view of the food processor of FIG. **1** with the enclosure closed.

FIG. **3** is a section view of the food processor and enclosure of FIG. **1**.

FIG. **4** is a perspective view of a cover of the enclosure for the food processor shown in FIG. **1**.

FIG. **5** is a perspective view of a body portion of the enclosure for the food processor shown in FIG. **1**.

FIG. **6** is a perspective view of a gasket of the enclosure for the food processor shown in FIG. **1**.

FIG. **7** is a perspective view of another embodiment of a food processor and enclosure according to the present invention showing the enclosure in an open position.

FIG. **8** is a front elevational view of the food processor enclosure of FIG. **7** and showing the container portion of the food processor.

FIG. **9** is a sectional view taken generally across line **9-9** of FIG. **8**.

FIG. **10** is a sectional view like FIG. **9** showing the cover in a closed position.

## PREFERRED EMBODIMENTS FOR CARRYING OUT THE INVENTION

One embodiment of an enclosure for a food processor made in accordance with the present invention is shown in FIGS. **1-6** and is indicated generally by the numeral **10**. The food processor includes a base member, generally indicated by the numeral **12**, which houses a motor to operate the blender. Enclosure **10** includes a cover **16** and a body portion **18** that is designed to be attached to base member **12**. The food processor further includes a container (not shown), which has a set of rotating blades therein, and which is used to contain and mix ingredients. As such, the container of the food processor is positioned on the base member **12** and housed within enclosure **10** during blending to muffle the noise generated by operation of the blender.

Base member **12** often includes a control panel **22** on one of its surfaces where the blender can be turned on and off, and the speed of rotation of the motor can be adjusted. An opening (not shown) may also be provided in base member **12** so that an electric cord can pass from within to provide power to the motor housed within base member **12**. Base member **12** also includes a raised pedestal **24** on a top surface thereof, which is adapted to be received in a base portion of the container. Pedestal **24** may include one or more pads **26** which, when received by the base portion of the container, prevent the container from rotating when the motor within base member **12** is actuated. In addition, pedestal **24** also receives a splined end **28** of a rotating motor shaft therethrough. A splined drive shaft, which extends from the blender blades within the container, engages the splined end of the rotating motor shaft in base member **12**. Rotation of the motor shaft caused by actuation of motor **14** is thereby transferred to the draft shaft and the blades rotatably positioned within the container, as is well known in the art.

Body portion **18** of enclosure **10** includes opposed sidewalls **30** spanned by a rear wall **32** and an abbreviated top wall **34** (FIG. **5**). Body portion **18** has an open front area opposed to rear wall **32**, which front area is closed by cover **16** to form enclosure **10**. Cover **16** includes opposed sidewalls **36** spanned by a front wall **38**, a top wall **40**, and an abbreviated back wall **42**. Cover sidewalls **36**, front wall **38** and top wall **40** are sized and spaced laterally such that cover **16** may fit over an overlap body portion sidewalls **30**.

Cover **16** and body portion **18** may be made of a clear thermoplastic material, such as polycarbonate or polyester, so that the container of the blender can be viewed when positioned on the base member **12** with cover **16** in a closed position. Alternatively, windows **44** may be provided in both cover **16** and body portion **18** to allow a container within enclosure **10** to be viewed.

Cover **16** may be pivotally connected to body portion **18** by any method known in the art, such that it can be moved from a closed position to an open position, allowing access to the interior of enclosure **10**. As such, a hinge assembly may be formed by a pair of sockets **46** on sidewalls **30** of body portion **18** and a pair of corresponding apertures **48** in sidewalls **36** of cover **16**. Apertures **48** are sized to fit over sockets **46**. Thus, when sockets **46** are positioned within apertures **48**, cover **16** is rendered pivotable with respect to body portion **18** on an axis defined by sockets **46**.

Body portion **18** also includes a foot **50** at the bottom of sidewalls **30** and rear wall **32**, foot **50** being adapted to secure enclosure **10** to the base member **12** of the food processor. Foot **50** may be secured to the base member **12** by any method known to persons skilled in the art, such as, for example, by tongue and groove attachment, with the use of fasteners including thumb screws, or by magnetic means. A vibration dampening seal may optionally be provided between foot **50** and base member **12** to reduce the vibrations transferred from base member **12** to enclosure **10**, thereby further reducing the noise created by the food processor.

Each sidewall **30** of body portion **18** includes an outwardly extending projection **54** thereon (FIG. **5**). Each projection **54** travels upward along the outer surface of sidewalls **30** and is configured to generally parallel a rear edge **56** of sidewalls **36** of cover **16**. Thus, where the rear edges **56** of sidewalls **36** have a radiused shape, as in the embodiment shown in FIGS. **1-6**, the projections **54** on sidewalls **36** also have a radiused shape. The mating shapes of rear edges **56** of sidewalls **36** and projections **54** ensure that rear edges **56** and projections **54** are in direct contact along the entire length of the projections.

A gasket, generally indicated by the numeral **60** and best shown in FIG. **6**, is fitted over a portion of body portion **18** of enclosure **10** to create a seal when cover **16** is in a closed position. Gasket **60** includes side portions **62**, a top portion **64** extending between laterally spaced side portions **62**, and may optionally include a bottom portion **66**. Gasket **60** is a single integral piece that is molded to fit snuggly over body portion **18** and may be secured to body portion **18** by any method known to those skilled in the art, including, for example, by providing an adhesive between gasket **60** and body portion **18**. Gasket **60** may be made of any material capable of providing a sound and vibration dampening seal against cover **16**, such as, for example, a thermoplastic elastomer.

The side portion **62** of gasket **60** include a lip **68** extending outwardly therefrom, and having a shape identical to projections **54** extending from body portion **18**. When gasket **60** is positioned on body portion **18**, lip **68** abuts and is in contact with projection **54**. Such helps to ensure proper positioning of gasket **60**, and also provides a superior seal against back edge **56** of cover sidewalls **36**, as will be hereinafter discussed. Side portion **62** of gasket **60** include aperture **70** sized and positioned to be aligned with apertures **48** and cover **16**, and to allow sockets **46** to extend therethrough. Top portion **64** of gasket **60** extends across the exterior of abbreviated top wall **34** of body portion **18**. Bottom portion **66** of gasket **60** extends around the outer, bottom edge of sidewalls **30** and rear wall **32**.

Gasket **60** provides a sealing surface for cover **16** of enclosure **10**. When cover **16** is in a closed position, the rear edges **56** of sidewalls **36** contact lip **68** of gasket **60**, thereby creating a seal therebetween. In addition, the interior of sidewalls **36** are in contact with the side portions **62** of gasket **60**, thereby providing an additional seal against noise generated within enclosure **10**. Top portion **64** of gasket **60** is engaged by abbreviated back wall **42** of cover **16**, providing a seal across the top of enclosure **10**. A complete seal is thus provided for

enclosure **10** when cover **16** is in a closed position inasmuch as no surface of cover **16** directly contacts body portion **18**. This significantly reduces the amount of vibration transferred between body portion **18** and cover **16**, and also provides a much improved sound barrier against noises created by the blending occurring within enclosure **10**.

Another embodiment of an enclosure made in accordance with the present invention is shown in FIGS. **7-10** and is indicated generally by the numeral **110**. Enclosure **110** is identical in most respects to enclosure **10** discussed above, and like components will therefore be numbered accordingly. The food processor includes a base member, generally indicated by the numeral **112**, which houses a motor to operate the blender. Enclosure **110** includes a cover **116** and a body portion **1 18** that is adapted to be attached to base member **112**. The food processor also includes a container **120**, which has a set of rotating blades therein, and which is used to contain and mix ingredients. As such, the container **120** is positioned on the base member **112** during operation of the food processor and is housed within enclosure **110** to muffle the noise generated by the operation of the food processor.

Base member **112** is identical to base member **12** discussed above, and includes a control panel **122**, a raised pedestal **124**, and pads **126** on raised pedestal **124**. A splined end of a rotating motor shaft extends through pedestal **124** and is adapted to engage a splined drive shaft extending from the blender blades within the container. Thus, rotation of the motor shaft is transferred to the drive shaft and the blades rotatably positioned within the container **120**, as is well known in the art.

Body portion **118** of enclosure **110** includes opposed side walls **130** spanned by a rear wall **132** and an abbreviated top wall **134**. Body portion **118** has an open front area opposed to rear wall **132** (FIG. **8**), the front area being closed by cover **116** to form enclosure **110**. Cover **116** of enclosure **110** is pivotally secured to body portion **118** such that it can be moved from a closed position to an open position, allowing access to the interior of enclosure **110**. Cover **116** includes opposed side walls **136** spanned by a front wall **138**, a top wall **140**, and an abbreviated back wall **142** (FIGS. **8** and **9**). Cover sidewalls **136**, front wall **138** and top wall **140** are sized and spaced laterally such that cover **116** may fit over and overlap body portion sidewalls **130**.

Cover **116** may be pivotally connected to body portion **118** by any method known in the art, such as, for example, a hinge assembly formed by a pair of sockets **146** on sidewalls **130** of body portion **118** and a pair of corresponding apertures **148** in sidewalls **136** of cover **116**. Cover **116** is thus pivotable with respect to body portion **118** on an axis defined by sockets **146**.

Body portion **118** also includes a foot **150** at the bottom of sidewalls **130** and rear wall **132**, foot **150** being adapted to secure enclosure **110** to the base member **112** of the blender. Foot **150** may be secured to the base member **112** by any method known to those skilled in the art, such as, for example, by tongue and groove attachment, with the use of mechanical fasteners, or with the use of magnets. A vibration dampening seal may optionally be provided between foot **150** and base member **112** to reduce the vibrations that are transferred from the base member to enclosure **110**, thereby further reducing the noise created by the blender.

Each sidewall **130** of body portion **118** of enclosure **110** includes a top outwardly projecting sealing flange **152** and a bottom outwardly projecting sealing flange **154**, as best shown in FIGS. **9** and **10**. Top flange **152** extends from socket **146** to the top of body portion **118**, and bottom flange **154** extends from socket **146** to the bottom of body portion **118**. Although top flange **152** and bottom flange **154** are shown as generally following the contours of sidewall **130** of body portion **118**, with both flanges curving toward socket **146**, it will be appreciated by those skilled in the art that top flange **152** and bottom flange **154** may be provided in alternative configurations without deviating from the scope of the present invention. For example, top flange **152** and bottom flange **154** may alternatively be provided as a substantially straight flange extending from the front, bottom corner of sidewall **130** to the top, rear corner of side wall **130**, interrupted by socket **146**. Top flange **152** and bottom flange **154** extend outwardly at an approximately 90° from sidewalls **130** of body portion **118** only a small distance relative to the overall size of enclosure **110**. For instance, top and bottom flanges **152** and **154** may extend outwardly from sidewalls **130** a distance between approximately 0.10 and 0.50 inches.

A top gasket **156** is provided on the surface of top flange **152** facing rear wall **132**. A bottom gasket **158** is similarly provided on the surface of bottom flange **154** facing away from rear wall **132**. Top gasket **156** and bottom gasket **158** may be made of any material known to persons skilled in the art that is capable of reducing vibrations between cover **116** and body portion **118** and capable of providing a sound reducing seal. For example, gaskets **156** and **158** may be made of a thermoplastic elastomer. Top and bottom flanges **152** and **154** and top and bottom gaskets **156** and **158** are substantially identical on both sidewalls **130**. Gaskets **156** and **158** may be secured to flanges **152** and **154**, respectively, by any adhesive known to persons skilled in the art.

An upwardly projecting back flange **160** is provided along the edge of abbreviated top wall **134** of body portion **118** between the two top flanges **152** on sidewalls **130**. Back flange **160** is similar to top flange **152** and bottom flange **154**, and may project upwardly from top wall **134** by a distance of between approximately 0.10 and 0.50 inches. Back flange **160** may also be integral with top flange **152** on both sidewalls **130** so that, in effect, a continuous flange extends from each socket **148**, up sidewalls **130**, and across abbreviated top wall **134**. A back gasket **162** is provided on back flange **160** on the surface facing rear wall **132**, the back gasket **162** being the same material as top and bottom gaskets **156** and **158**, and being attached to the flange by the same method as the sidewall gaskets.

Sidewalls **136** of cover **116** each have an inwardly projecting upper flange **164** and an inwardly projecting lower flange **166**. Upper flange **164** extends from aperture **148** to top wall **140** and lower flange **166** extends from aperture **148** to the bottom of cover sidewall **136**. Upper flange **164** and lower flange **166** are substantially identical to top, bottom, and back flanges **152**, **154**, and **160** of body portion **118**, projecting from sidewalls **136** a distance of between approximately 0.10 and 0.50 inches. Upper flange **164** and lower flange **166** on cover **116** also mirror the shape of top flange **152** and bottom flange **154**, and are positioned within cover **116** so that upper flanges **164** mate with top gaskets **156**, and lower flanges **166** mate with bottom gaskets **158** when cover **116** is in a closed position. At the same time, when cover **116** is closed, back gasket **162** mates with abbreviated back wall **142** of cover **116** to form a back seal. By positioning upper gasket **156** and back gasket **162** on the rear of top flange **152** and back flange **160**, a flange may be provided within cover **116** that creates a complete seal above the pivot point of the cover without impeding the ability of the cover to pivot. Similarly, by positioning bottom gasket **158** on the front surface of bottom flange **154**, an inner flange may be provided within cover **116** that provides a complete seal without impeding the ability of the cover to pivot.

The inclusion of flanges to support the gaskets of the enclosure is an alternative to adhering gaskets only to the outer surface of sidewall **130** or the inner surface of sidewalls **136**. In addition, due to the structure of the flanges and gaskets, the weight of cover **116** acts to maintain a seal between the covers flanges and the gaskets on the body portion of the enclosure when cover **116** is closed.

It is thus evident that an enclosure for a food processor constructed as described herein accomplishes the objects of the present invention and otherwise substantially improves the art.

What is claimed is:

**1**. An enclosure for a blender comprising a body portion adapted to be secured to a base of the blender, the body portion including opposed sidewalls, a flange extending outwardly from each of said sidewalls, a cover pivotally secured to said body portion and movable between an open position and a closed position, and a gasket positioned between said cover and said flanges on said body portion when said cover is in the closed position.

**2**. The enclosure of claim **1** said gasket being made of a thermoplastic elastomer material.

**3**. The enclosure of claim **1**, said body portion including a rear wall extending between said sidewalls, a top wall, and a foot adapted to be secured to the base of the blender, said cover including opposing sidewalls, a front wall extending between said cover sidewalls, and a top wall.

**4**. An enclosure for a blender comprising a body portion adapted to be secured to a base of the blender, a cover pivotally secured to the said body portion and movable between an open position and a closed position, and a sealing gasket, said cover including opposed sidewalls having a rear edge, a front wall extending between said sidewalls, and a top wall, said body portion including opposed sidewalls having outwardly extending flanges shaped to mirror said rear edges of said cover sidewalls, a rear wall extending between said sidewalls, and a top wall, said gasket covering a portion of said sidewalls and said top wall of said body portion and positioned between said body portion and said cover when said cover is in the closed position.

**5**. The enclosure of claim **4**, said gasket having a lip positioned over a front facing surface of said flanges on said body portion sidewalls, wherein said rear edges of said cover are in contact with said lip of said gasket when said cover is in the closed position.

**6**. The enclosure of claim **5**, said cover including a downwardly extending rear flange extending from an edge of said top wall opposite said front wall, said rear flange extending laterally between said cover sidewalls.

**7**. The enclosure of claim **6**, said top wall of said body portion including an upwardly extending top flange, said gasket including a top portion positioned over a rear facing surface of said top flange, wherein said rear flange on said cover is in contact with said top portion of said gasket when said cover is in the closed position.

**8**. The enclosure of claim **4**, said gasket being made of a thermoplastic elastomer.

**9**. An enclosure for a blender comprising a body portion adapted to be secured to a base of the blender, a cover pivotally secured to **[**the**]** said body portion and movable between an open position and a closed position, and a **[**sealing**]** gasket *secured to said body portion*, said body portion including opposed sidewalls**[**,**]** *and* a rear wall extending between said sidewalls**[**, and a top wall, said gasket covering a portion of said sidewalls and said top wall of said body portion and positioned between said body portion and said cover when said cover is in the closed position**]**, said gasket **[**including a bottom portion**]** extending along *a bottom portion of* said body portion sidewalls and across *a bottom portion of* said rear wall**[**, said bottom portion being adapted to secure said gasket in position on said body portion**]**.

**10**. An enclosure for a blender comprising a body portion adapted to be secured to a base of the blender, said body portion including an outwardly extending flange, a cover pivotally secured to said body portion and movable between an open position and a closed position, said cover including an inwardly extending flange, and a gasket positioned on one of said outwardly extending flange and said inwardly extending flange, said gasket being between and in contact with both said outwardly extending flange and said inwardly extending flange when said cover is in the closed position.

**11**. The enclosure of claim **10**, said body portion including opposed sidewalls, a rear wall extending between said sidewalls, and a top wall, said outwardly extending flange extending from said sidewalls and said top wall.

**12**. The enclosure of claim **11**, said cover including opposing sidewalls, a front wall extending between said sidewalls, and a top wall, said inwardly extending flange extending from said cover sidewalls and said cover top wall.

**13**. The enclosure of claim **12**, said cover being pivotally connected to said body portion by a socket extending outwardly from each body portion sidewall, said sockets being received in apertures in each of said cover sidewalls, said sockets and apertures defining a pivot axis of said cover.

**14**. The enclosure of claim **13**, said outwardly extending flange on said body portion being divided into a top flange and a bottom flange by said sockets, said top flange extending upward from said sockets and said bottom flange extending downward from said sockets.

**15**. The enclosure of claim **14**, said inwardly extending flange on said cover being divided into an upper flange and a lower flange by said apertures, said upper flange extending upward from said apertures and said lower flange extending downward from said apertures.

**16**. The enclosure of claim **15**, said gasket being positioned on a front facing surface of said bottom flange and on a rear facing surface of said top flange.

**17**. The enclosure of claim **10**, said gasket being made of a thermoplastic elastomer.

*18. A blender comprising:*

*a base member, said base member housing a motor;*

*an enclosure providing a sound barrier to said base member, the enclosure comprising:*

*a body selectively securable to the base member;*

*a cover coupled to the body, the cover moveable between open and closed positions; and*

*a gasket secured to one of an outer sidewall surface of said body or an inner sidewall surface of said cover, wherein said gasket is configured to prevent said outer sidewall surface of said body from direct contact with said inner sidewall of said cover.*

*19. The blender of claim 18, wherein preventing direct contact of said outer sidewall surface of said body with said inner sidewall of said cover reduces vibration between said body and cover created by said motor.*

*20. The blender of claim 19, wherein at least a portion of said gasket extends along a bottom portion of sidewalls of said body and across a bottom portion of a rear wall of said body.*

* * * * *