United States Patent [19]

Wright

[11] **3,805,793**

[45] **Apr. 23, 1974**

[54] **ANASTOMOTIC APPARATUS**

[76] Inventor: **Sanford J. Wright,** P.O. Box 809, Everett, Wash. 98206

[22] Filed: **Mar. 21, 1973**

[21] Appl. No.: **343,224**

[52] **U.S. Cl.**..... **128/334,** 128/214 R, 128/305, 128/348, 408/138, 72/71

[51] **Int. Cl.. A61b 17/04,** A61b 17/32, A61m 5/00, A61m 25/00

[58] **Field of Search**..... 128/348, 214 R, 334 R, 128/305; 72/71; 408/138; 137/318

[56] **References Cited**

UNITED STATES PATENTS

3,472,231	10/1969	Niebel et al.	128/334 R
3,638,652	1/1972	Kelley	128/334 R
3,019,789	2/1962	Whitehill et al.	128/305
3,313,315	4/1967	Rothwell	137/318
3,142,205	7/1964	Huslander	72/71
3,713,441	1/1973	Thomas	128/214 R

Primary Examiner—Aldrich F. Medberry
Attorney, Agent, or Firm—Gardiner, Sixbey, Bradford & Carlson

[57] **ABSTRACT**

An anastomotic apparatus including an outer tubular member connected with a source of vacuum pressure for holding the open end of a donor blood vessel in contact with the side wall of a recipient vessel, thereby permitting adhesive joining of the vessels. To test the anastomosis seal, a source of positive pressure is provided for pressurization of the interior of the outer tubular member. The anastomotic apparatus also includes an inner tubular member concentrically mounted within the outer tubular member having a cutting head secured to the lower end thereof which may be advanced to remove that portion of the recipient vessel circumscribed by the sealed end of the donor vessel. In one embodiment, the cutting head includes a plurality of cutter blades attached to and extending axially from the lower end of the inner tubular member. In a second embodiment, the cutting head includes an electrical resistance heating wire for cutting the recipient blood vessel by cauterization.

18 Claims, 9 Drawing Figures

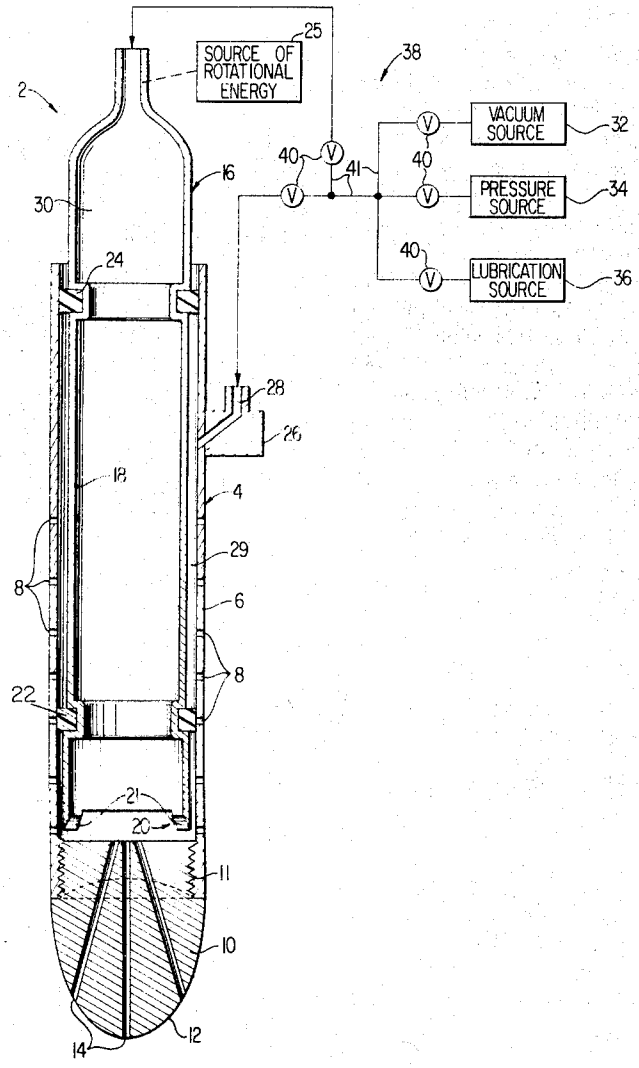

FIG. 1

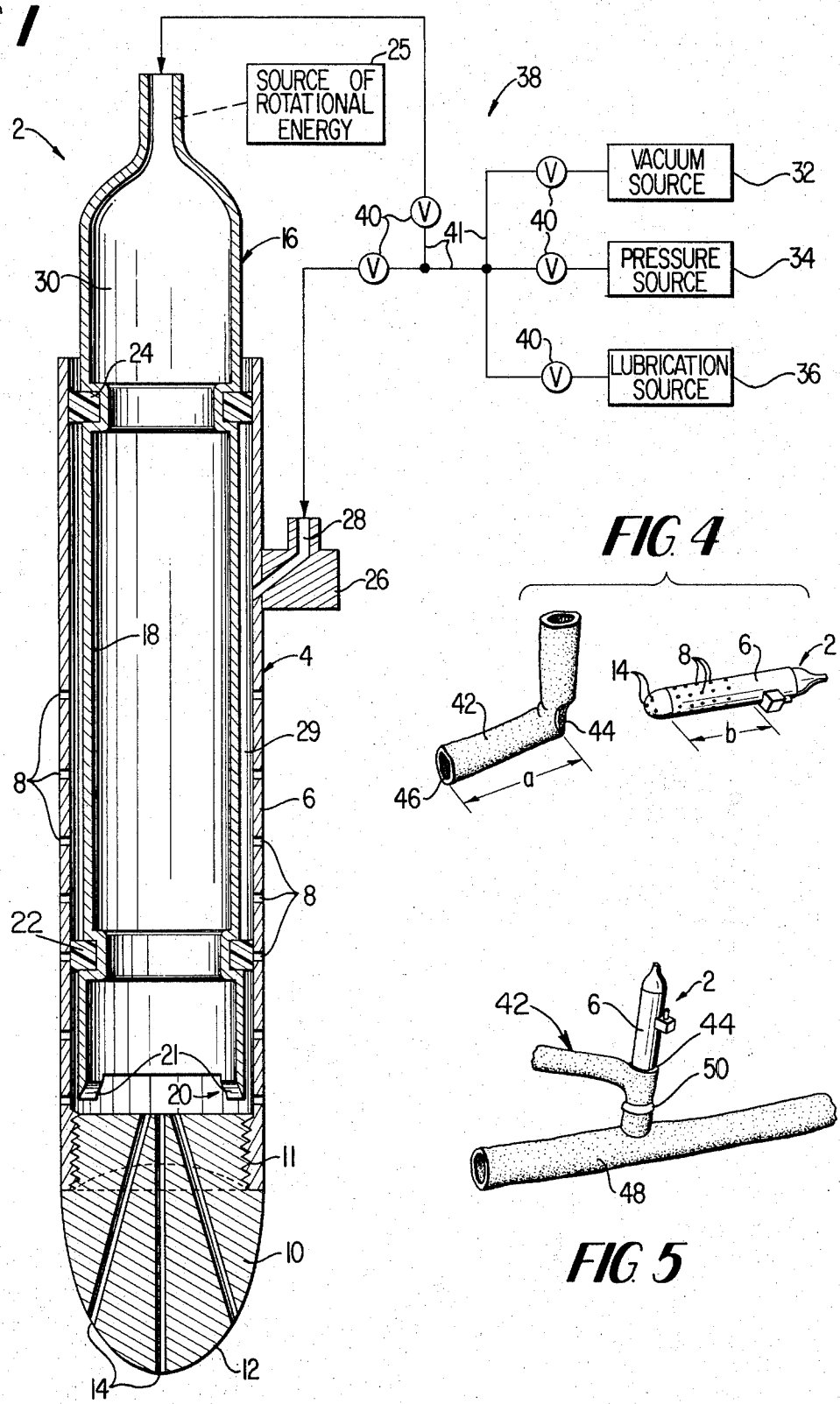

FIG. 4

FIG. 5

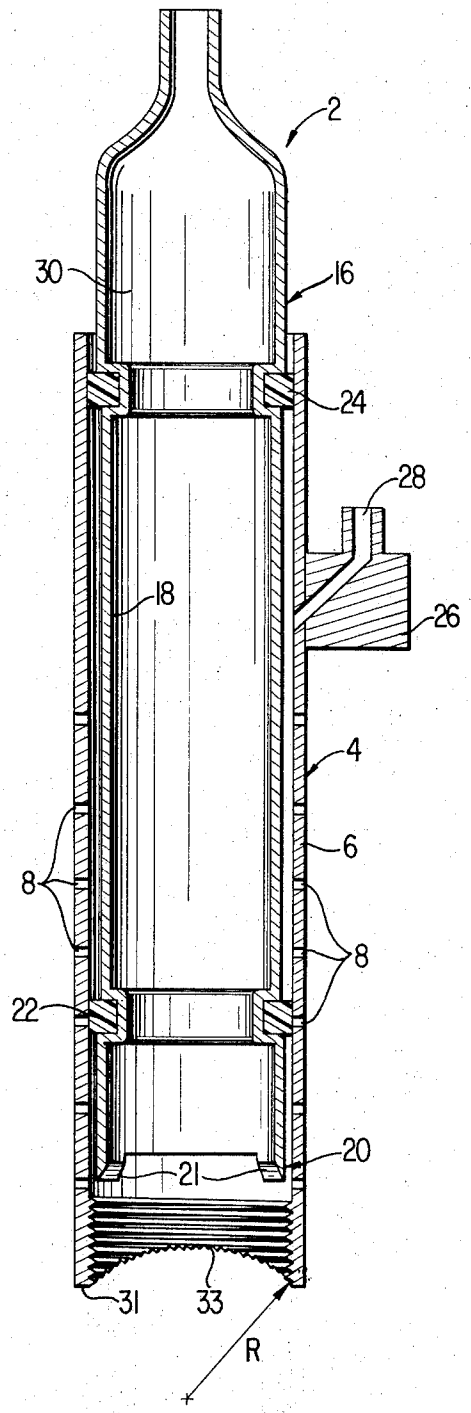
2
30
16
24
28
18
26
4
6
8
8
22
20
21
31
33
R

FIG. 2

FIG. 3

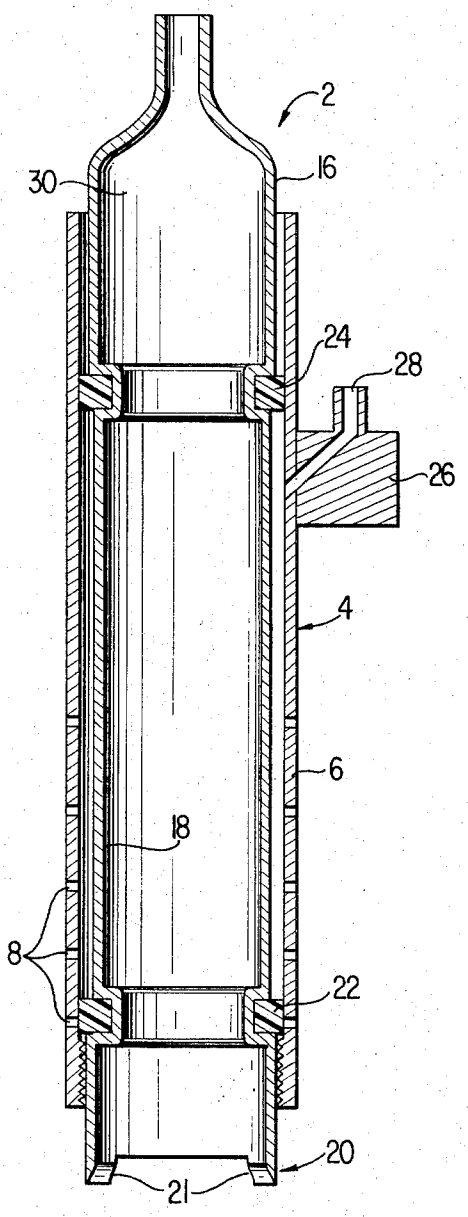
2
30
16
24
28
26
4
6
18
8
22
20
21

FIG. 6

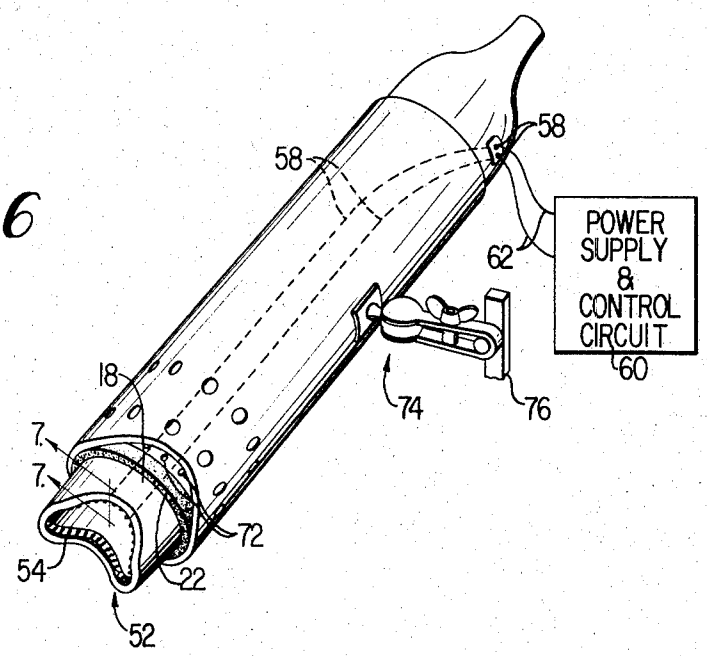

FIG. 7

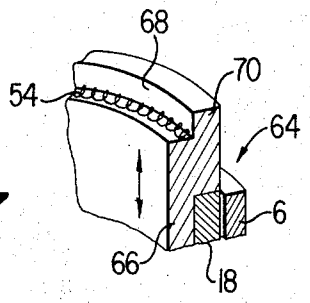

FIG. 8

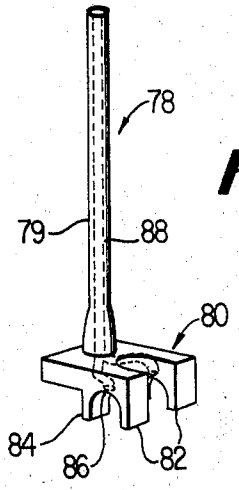

FIG. 9

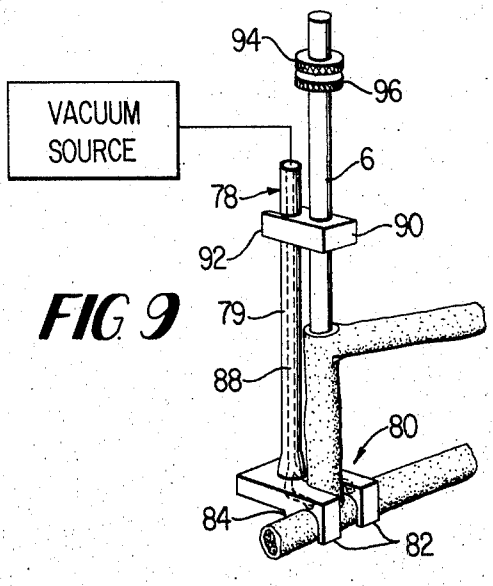

ANASTOMOTIC APPARATUS

BACKGROUND OF THE INVENTION

1. Field of the Invention

This invention relates to apparatus for nonsuture adhesive anastomosis of tubular body elements.

2. Description of the Prior Art

Interconnection of tubular body elements has traditionally been performed by suturing techniques which are, at best, tedious and time consuming. Numerous attempts have been made to improve such techniques by the use of specialized instruments adapted to assist the surgeon in obtaining a long lasting, highly reliable interconnection. For example, U.S. Pat. No. 3,561,448 to Peternel discloses a clamp assembly for positioning blood vessels to hold the blood vessels in engagement thereby facilitating interconnection. While such instruments are well suited for the purposes intended, the particular requirements involved in small vascular surgery, particularly within intracraneal spaces, makes the manipulation of bulky equipment difficult if not impossible.

In response to this problem, it has been proposed to employ plastic adhesive in place of sutures thereby eliminating the need for suturing instruments. See, for example, Suzuki et al. "A soluble Internal Splint for Experimental Vascular Anastomosis," Journal of Neurosurgery, Vol. 35, September 1971, pp. 35–58. However, the use of adhesives has not eliminated the need for severing recipient vessels prior to formation of the anastomosis. A need, therefore, exists for providing the surgeon with a simple technique for performing highly reliable anastomosis including the capability of testing the anastomotic joint prior to incision of the recipient vessel. Techniques for establishing a joint with the side wall of an "in service" conduit prior to opening of the conduit are well known in the plastic tubing art as disclosed in U. S. Pat. No. 2,736,335 issued Feb. 28, 1956 to Webber. However, no instrument known heretofore has provided this capability in the anastomosis art nor has any disclosure been made of an instrument which allows testing of the anastomosis joint prior to cutting of the recipient vessel.

SUMMARY OF THE INVENTION

A general object of this invention is to provide an anastomotic appartus for joining the open end of a donor vessel to the side wall of the recipient vessel in which biological fluids are flowing. More particularly, the disclosed anastomotic apparatus is adapted to support the open end of a donor vessel in contact with a side wall of a recipient vessel, whereby the contacting surfaces may be adhesively joined. After the adhesive has set, the anastomotic apparatus is adapted to test the seal under pressure and then to remove that portion of the side wall of the recipient vessel circumscribed by the interior edge of the sealed end of the donor vessel. Through use of the disclosed apparatus, anastomosis may be performed without compromising the flow of biological fluids within the recipient vessel in any way. Accordingly, the procedure is never committed until the sealed joint has been treated. A further advantage is that the full circumference of the recipient vessel need never be cut since adhesive joining permits the donor vessel to be integrally bonded with the side wall of the recipient vessel, thereby further eliminating the need for interruption of flow in the recipient vessel at any time. Due to the small size of the disclosed apparatus and the minimal manipulation required for operation thereof, anastomosis may be performed within extremely confined spaces of a living animal such as the intracraneal spaces of the human body.

It is another object of this invention to provide an anastomotic apparatus including support means for supporting the open end of a donor vessel in contact with the side wall of a recipient vessel and including cutting means positioned within the support means for cutting through and removing that portion of the side wall of the recipient vessel circumscribed by the interior edge of the sealed end of the donor vessel, whereby the interior lumens of the vessels may be brought into communication.

Another object of the invention is to provide an anastomotic apparatus wherein the support means includes an outer tubular member having a outer diameter approximately equal to the inside diameter of the donor vessel and a trocar tip removably connected with a first end of the outer tubular member. The trocar tip is rounded at the outer end to facilitate insertion of the tubular member into the interior of the donor vessel.

Yet another object of this invention is to provide an anastomotic apparatus wherein the outer tubular member includes a plurality of openings extending between the outer surface and the interior thereof and the trocar tip includes a plurality of channels extending between the interior of the outer tubular member and the outer surface of the trocar tip. The anastomotic device further includes a vacuum pressure source, a positive pressure source, a pressurized lubrication source and coupling means for selectively connecting the vacuum pressure, the positive pressure and the pressurized lubrication sources with the interiors of the outer and inner tubular members. By this arrangement, the exterior circumferential surface of the outer tubular member and the outer surface of the trocar tip may be lubricated prior to insertion into the donor vessel by coupling the pressurized lubrication source to the interior of the outer tubular member. Furthermore, the donor vessel may be drawn into tight engagement with the outer tubular member and with the recipient vessel when the vacuum source is connected with the interior of the outer tubular member to permit the donor vessel to be sealed to the recipient vessel and to permit the recipient vessel to be severed by the cutting means. To test the integrity of the seal between the donor and recipient vessels, the interior of the outer tubular member may be connected with the positive pressure source by the above mentioned coupling means.

Still another object of this invention is to provide an anastomotic apparatus wherein the cutting means includes an inner tubular member mounted concentrically within the outer tubular member and having cutter head means located at a first end of a tubular member for severing the side wall of the recipient vessel. The inner tubular member is movable between a retracted position wherein the trocar tip may be secured to the interior surface of the outer tubular member adjacent the first end and an extended position in which the cutter head means may engage the side wall of the recipient vessel.

Yet another object of the invention is to provide an anastomotic apparatus wherein the cutter head means includes a plurality of cutter blades mounted in an axi-

ally extended position on the first end of the inner tubular member.

Yet another object of this invention is to provide an anastomotic apparatus wherein the cutter head means includes a cauterizing means for severing a selected portion of the side wall of the recipient vessel. The cauterizing means includes an electrical resistance heating wire extending around the circumference of the inner tubular member and heat insulation means for insulating the donor vessel from the heat generated by the electrical resistance heating wire during the cauterization process.

Other objects and advantages of the invention will become apparent from a study of the following specification when viewed in light of the accompanying drawings.

BRIEF DESCRIPTION OF THE DRAWINGS

FIG. 1 is a cross sectional view of an anastomotic apparatus in accordance with this invention including inner and outer tubular members and a trocar tip coupled to sources of vacuum, positive pressure and lubrication;

FIG. 2 is a cross sectional view of the anastomotic apparatus of FIG. 1 wherein the trocar tip has been removed;

FIG. 3 is a cross sectional view of the anastomotic apparatus of FIG. 1 wherein the inner tubular member has been extended into the cutting position;

FIG. 4 is a perspective view of an anastomotic apparatus in accordance with this invention in combination with a prepared donor vessel illustrating the manner by which the donor vessel is dressed upon the anastomotic apparatus;

FIG. 5 is a perspective view of an anastomotic apparatus in accordance with the subject invention being used during the sealing and testing operation for joining a donor vessel to the side wall of a recipient vessel;

FIG. 6 is a perspective view of a second embodiment of an anastomotic apparatus of the subject invention including a cauterization means mounted on one end of the inner tubular member in combination with a power supply and control circuit;

FIG. 7 is a partial cross-sectional view of the cauterization means illustrated in FIG. 6 along lines 7—7 of FIG. 6;

FIG. 8 is a perspective view of suction support means for preventing a recipient blood vessel from turning; and

FIG. 9 is a perspective view of the suction support means of FIG. 8 in actual use.

DESCRIPTION OF THE PREFERRED EMBODIMENT

As illustrated in FIG. 1, an anastomotic apparatus 2 is disclosed including support means 4 for supporting the open end of a donor vessel in contact with the side wall of a recipient vessel to permit the open end of the donor vessel to be integrally sealed by adhesives to the side wall of the recipient vessel without interrupting the flow of biological fluid in the recipient vessel. Support means 4 includes an outer tubular member 6 having an outer diameter approximately equal to the inside diameter of the donor vessel and containing a plurality of openings 8 extending between the outer surface and the interior of the outer tubular member 6. The support means 4 also includes a trocar tip 10 connected by suitable means such as screw threads 11 with a first end of the outer tubular member 6. The trocar tip is rounded at the outer end 12 to facilitate insertion of the tubular member into the interior of the donor vessel. Like the outer tubular member, the trocar tip contains a plurality of channels 14 extending between the interior of the outer tubular member 6 and the outer surface of the trocar tip. The proportions of the device have been exaggerated in FIGS. 1–3. Overall dimensions of the outer tubular member of an anastomotic apparatus incorporating the features of this invention might be 4 inches in length by one-sixteenth to one-eighth inches in diameter.

Positioned within the outer tubular member 6 is cutting means 16 for cutting through and removing a portion of the side wall of a recipient vessel circumscribed by the interior edge of the sealed end of a donor vessel. The cutting means 16 includes an inner tubular member 18 mounted concentrically within the outer tubular member 6 and having cutter head means 20 located at a first end of the inner tubular member 18 for severing the side of the recipient vessel. Upon removal of the trocar tip 10, the inner tubular member 18 may be movable between a retracted position illustrated in FIG. 1 and an extended position illustrated in FIG. 3 in which the cutter head means 16 is adapted to remove that portion of the side wall of the recipient vessel circumscribed by the sealed end of the donor vessel. The cutter head means may include a plurality of axially extending cutter blades 21 connected with the first end of the inner tubular member.

Supporting the inner tubular member 18 within the outer tubular member 6 for both longitudinal and rotational motion is a pair of sealing rings 22, 24 mounted on the outer surface of the inner tubular member adjacent each end, respectively thereof, and in sealing engagement with the outer tubular member 6. Rings 22, 24 permit the inner tubular member 18 to be moved between the retracted and extended positions illustrated in FIGS. 1 and 3, respectively, while maintaining a sealed interconnection between the two tubular members. Once in the extended position the inner tubular member may be turned in a well controlled manner by a source of rotational energy 25 such as a dental drill power source.

The outer tubular member 6 includes a support appendage 26 integrally connected therewith. The support appendage 26 may be connected with a solid stable support such as the skull when the anastomotic apparatus is employed to connect intracraneal blood vessels. The support appendage also contains a through passage 28 communicating with the space 29 between the inner and outer tubular member and extending between the pair of sealing rings 22, 24. The inner tubular member 18 includes a central passage 30 extending through the entire axial length of the inner tubular member 6. The central passage 30 extends entirely through the cutter head means 20 and communicates with the outer surface thereof.

For the reasons described herein below, the anastomotic apparatus 2 includes a source of vacuum 32, a source of positive pressure 34 and a source of lubrication under pressure 36 selectively connectable with the through passage 28 and central passage 30 by coupling means 38 employing a plurality of valves 40 and conduits 41 for selectively connecting sources 32, 34, 36 with the aforementioned passages 28, 30. When the

anastomotic apparatus is assembled as illustrated in FIG. 1, passages 28 and 30 may be connected with the lubrication source to force lubrication onto the outer surfaces of the anastomotic apparatus through space 29, openings 8 and channels 14, thereby to facilitate the insertion of the apparatus into the interior of a donor vessel. This arrangement virtually eliminates the possibility of damaging the interior surface tissue of the donor vessel during the insertion step.

As disclosed in FIG. 2, the lower end 31 of the outer tubular member 6 is concaved and has a radius of curvature R approximately equal to the radius of the recipient vessel. The lwer end 31 includes a plurality of small prongs or sharp points 33 projecting axially of member 6 for preventing the recipient vessel from twisting during the cutting operation of the inner tubular member 18. Points 33 should not be so large as to damage or seriously injure the recipient vessel. The anastomotic apparatus illustrated in FIG. 2 may be connected with the source of vacuum 32 to thereby draw a donor vessel, into which the outer tubular member has been inserted, into contact with a predetermined portion of the side wall of a recipient vessel and into tight engagement with the outer tubular member. In this manner, the donor vessel may be held in a fixed position to permit the setting of an adhesive to bring about a permanent connection between the donor and recipient vessels. After the adhesive has set but before the recipient vessel is severed by the cutting head means 20, passages 28, 30 may be connected with the pressure source 34 by coupling means 38 to determine the integrity and completeness of the seal between the donor and recipient vessels. The advantage of this arrangement is that the anastomotic joint may be tested prior to severing of the donor vessel, thereby eliminating the need for severing or cutting through the recipient vessel before the surgeon is assured that the adhesive bond is tight. To complete the anastomosis with the disclosed apparatus, the vacuum source is reconnected with passages 28 and 30 by the coupling means 38 in order to again draw the donor vessel tightly against the outer tubular member, whereupon the inner tubular member may be advanced to an extended position as illustrated in FIG. 3 and rotated either manually or automatically to sever that position of the recipient vessel circumscribed by the sealed end of the donor vessel. By connecting the central passage 30 of the inner tubular member with the vacuum source, the removed portion of the recipient vessel is forced against the cutter head means thereby eliminating the possibility that such portion will become lodged within the recipient vessel.

In order to explain more clearly the operation of the disclosed anastomotic apparatus, reference is now made to FIGS. 4 and 5 which disclose the subject invention in actual operation. FIG. 4 illustrates a donor vessel 42 which has been prepared for connection with a recipient vessel by placing an opening 44 in the side wall of the donor vessel at a distance a from the open end 46 which is to be joined to the side wall of the recipient vessel. Distance a corresponds to the operative length *b* of the outer tubular member 6. As described above, the anastomotic apparatus is connected with a source of lubrication to force lubricating material through openings 8 and channels 14 in order to facilitate insertion of the anastomotic apparatus into the donor vessel without causing injury thereto.

Once the anastomotic apparatus has been inserted in the donor vessel, the trocar tip 10 may be removed thereby exposing the concave end 31 of the outer tubular member 6 which allows the open end of the donor vessel to be prepared for joining with the side wall of the recipient vessel. The open end of the donor vessel is coated with adhesive and brought into contact with the side wall of the recipient vessel 48 whereupon passages 28, 30 are connected with the vacuum source 32 to draw the open end of the donor vessel into tight engagement with the side wall of the recipient vessel. The adhesive which has been placed between the open end of the donor vessel and the side wall of the vessel is now permitted to set thereby forming a bond between the subject vessels. Positive pressure is introduced into passages 28 and 30 to test the integrity of the formed bond before the recipient vessel is severed by cutting means 16. To aid in this process, a pressure ring 50 may be tightened around the donor vessel at a point above openings 8 of the outer tubular member 6. Assuming the sealed connection to be free from leaks of any kind, the vacuum source 32 may be reconnected with the passages 28 and 30 in order to again draw the donor vessel tightly against the outer tubular member 6, whereupon the inner tubular member is advanced to an extended position wherein rotation thereof permits cutting blades 21 to sever that portion of the recipient vessel circumscribed by the sealed end of the donor vessel. The anastomosis may now be completed by withdrawing the anastomotic apparatus and closing opening 44 by any suitable means.

Reference is now made to FIG. 6 which illustrates a second embodiment of the subject invention which has been modified by replacement of the cutter blades 21 with cauterization means 52 at the lower end of the inner tubular member 18. Cauterization means 52 includes a resistance heating wire 54 connected by means of electrical leads 56 to a pair of terminals 58 located on the upper end of the inner tubular member 18. The terminals are connected with a power supply and a control circuit 60 by means of electrical leads 62.

As best illustrated in FIG. 7, the cauterization means 52 includes a heat insulation means 64 for insulating the donor vessel from the heat generated by electrical resistance heating wire 54. The heat insulating means includes an insulation ring 66 mounted on the lower end of the inner tubular member 18 wherein the insulation ring 66 is shaped to form a circumferential notch 68 on the inside of the ring for receiving and retaining the electrical resistance wire 54 and to form a ring of insulation 70 between the electrical resistance wire and the outer tubular member 6.

Returing to FIG. 6, it should be noted that inner tubular member 18 is advanced beyond the normal extended position to reveal a plurality of openings 72 extending between the interior and exterior surfaces of the tubular member. By this arrangement, through passage 28 may be eliminated and the vacuum, positive pressure and lubrication may all be supplied through a central passage 30 of the inner tubular member. It should also be noted that the entire anastomotic apparatus may be supported by means of a ball joint connection 74 between the outer tubular member and a fixed support 76. The cauterization cutting means illustrated in FIGS. 6 and 7 is preferred over the cutting blades employed in the embodiment of FIGS. 1–3 because cauterization prevents separation of the various layers

of the vessel between which the biological fluids would otherwise enter.

Examples of suitable adhesives for forming the sealed joint between the donor and recipient vessel include methyl-2-cyanacrylate and alpha-ethyl cyanacrylate.

The inner tubular member may be eliminated altogether and replaced by chemical cutting means such as a strong acid. According to this method, the portion of the side wall of the recipient vessel circumscribed by the open end of the donor vessel would be dissolved or "eaten away" by a strong acid placed within the outer tubular member **6.** Accordingly, the cutting means of the subject invention may be embodied in one or more cutting blades, electrical cutting means, or chemical means.

Referring now to FIG. **8,** a suction support means **78** is disclosed for supporting the outer tubular member **6** relative to a recipient blood vessel. The suction support **78** includes an upright stem **79** and a U-shaped bottom portion **80** wherein each side of the bottom portion includes a pair of downwardly extending legs **82, 84.** The legs are separated by a distance approximating the diameter of the recipient vessel. To assist in holding the recipient vessel against turning during the cutting operation an arched surface **86** is provided for frictionally contacting the surface of the recipient vessel. The frictional fit is assisted by a negative pressure, communicated to the arched surface by a passageway **88** (illustrated in dotted lines) extending from the upper end of the stem into each side of the U-shaped bottom portion **80.**

As illustrated in FIG. **9,** an attachment link **90** is provided which contains a through bore for slidingly receiving the outer tubular member **6** and which includes a clip **92** adapted for snap fitting around the upper stem **79** of the suction support means **78.**

A pair of knobs **94, 96** may be provided for integral connection with the inner and outer tubular members, respectively, thereby permitting manual turning of the inner tubular member relative to the outer tubular member. In operation, the outer tubular member is placed within the through bore of attachment link **90** and the suction support means **78** is brought into contact with the recipient vessel and held in frictional contact therewith by connecting passageway **88** with a source of vacuum. Thereafter, the donor vessel is placed on the outer tubular member **6** as previously discussed. The attachment link may now be snaped onto the upright stem **79** to secure the outer tubular member **6** relative to the recipient vessel. The outer tubular member may now be advanced through the bore of the attachment link to bring the donor vessel into contact with the side wall of the recipient vessel.

An anastomotic apparatus has been disclosed which provides the surgeon with an extremely efficient and easily manipulated device for joining a donor vessel to the side wall of a recipient vessel such as the blood vessels in the human body. Since the sealed joint may be tested before the recipient vessel is severed in any way, the risk due to improperly executed sealed joints is significantly reduced. This apparatus has the added advantage of permitting anastomosis interruption of the flow of biological fluids in the recipient vessel at any time before or after anastomosis.

I claim:

1. An anastomotic apparatus for joining the open lumen end of a donor vessel to the side wall of a recipient vessel in which biological fluids are flowing, comprising

a. support means for supporting the open end of the donor vessel in contact with the side wall of the recipient vessel;

b. selective actuable means for holding the support means and the open end of the donor vessel in sealed contact with the side wall of the recipient vessel without interrupting the flow of biological fluids in the recipient vessel;

c. hollow lumen cutting means positioned substantially within said support means for cutting through and removing a portion of the side wall of the recipient vessel circumscribed by the interior edge of the sealed end of the donor vessel; and

d. selectively controlled suction means connected to the support means for securing the removed wall portion, whereby the vessel lumens may be brought into fluid communication.

2. An anastomotic apparatus as defined in claim **17** further including test means connected with said support means for pressurizing the interior of the donor vessel adjacent the seal to test the integrity of the seal between the donor vessel and the side wall of the recipient vessel.

3. An anastomotic apparatus as defined in claim **18** wherein said support means includes

a trocar tip removably connected with a first end of said tubular member, said trocar tip being rounded at the outer end to facilitate insertion of said outer tubular member into the interior of the donor vessel.

4. An anastomotic apparatus as defined in claim **3** wherein said cutting means includes an inner tubular member mounted concentrically within said outer tubular member and having cutter head means located at a first end of said inner tubular member for severing the side wall of the recipient vessel, said inner tubular member being movable between a retracted position in which said trocar tip may be secured to said outer tubular member and an extended position in which said cutter head means may engage the side wall of the recipient vessel circumscribed by the open end of the donor vessel.

5. An anastomotic apparatus as defined in claim **4** wherein said cutting means contains a central passage extending between the other end of said inner tubular member and the outer surface of said cutter head means, said central passage being connected with said source of vacuum when said inner tubular member is moved to said extended position, whereby the portion of the side wall of the recipient vessel removed by said cutter means may be retained against said cutter head means by a pressure differential created by said vacuum source.

6. An anastomotic apparatus as defined in claim **4** wherein said inner tubular member includes a pair of sealing rings mounted on the outer surface thereof adjacent each end of said inner tubular member and wherein said outer tubular member includes

a. a plurality of openings extending between the outer circumferential surface of the outer tubular member and the space between said inner and outer tubular member extending between said pair of sealing rings, and

b. coupling means for connecting said space between said inner and outer tubular members selectively

with sources of vacuum, positive pressure or lubrication.

7. An anastomotic apparatus as defined by claim **4** wherein said cutter head means includes a plurality of cutter blades mounted in an axially extending position on said first end of said inner tubular member.

8. An anastomotic apparatus as defined in claim **18** wherein said first end of said outer tubular member is concave with a radius of curvature approximately equal to the radius of curvature of the recipient vessel.

9. An anastomotic apparatus as defined in claim **3** wherein said outer tubular member contains a plurality of apertures providing a passage between the interior and the circumferential surface of said tubular member and wherein said trocar tip contains a plurality of channels also providing a passage between the interior of said outer tubular member and the outer surface of said trocar tip.

10. An anastomotic apparatus as defined in claim **18** wherein said outer tubular member includes a support appendage adapted for connection with a solid stable support.

11. An anastomotic apparatus as defined in claim **8** wherein said first end includes a plurality of sharp points projecting axially of said outer tubular member, whereby the recipient vessel is prevented from twisting during the cutting operation.

12. An anastomotic apparatus as defined in claim **10** wherein said source of vacuum communicates selectively with the interior of said outer tubular member, whereby upon removal of said trocar tip the open end of a donor vessel into which said outer tubular member has been inserted may be placed in contact with a predetermined portion of the side wall of the recipient vessel and the donor vessel may be drawn into tight engagement with said tubular member and the recipient vessel whenever said source of vacuum is connected with the interior of said outer tubular member.

13. An anastomotic apparatus as defined by claim **4** wherein said cutter head means includes cauterizing means for severing selected portions of the side wall of the recipient vessel by cauterization, said cauterizing means including

a. an electrical resistance heating wire extending around the circumference of said first end of said inner tubular member; and

b. heat insulation means for insulating the donor vessel from the heat generated by said electrical resistance heating wire, said heat-insulation means including an insulation ring mounted on said first end of said inner tubular member, said insulation ring being shaped to form a circumferential notch on the inside of said ring for receiving said electrical resistance wire and to form a ring of insulation between said electrical resistance heating wire and said outer tubular member.

14. An anastomotic apparatus as defined in claim **3** further including

a. pressure clamp means for applying a circumferential pressure to the exterior surface of the donor vessel at a location spaced from the sealed end thereof to form a circumferential seal between said outer tubular member and the donor vessel; and

b. a pressure source selectively connectable with the interior of said outer tubular member to apply a positive pressure in the space between the recipient vessel and the pressure clamp means to test the integrity of the seal before the recipient vessel is cut by said cutting means.

15. An anastomotic apparatus for joining an open end of a donor vessel to the side wall of a recipient vessel in which biological fluids are flowing, comprising

a. support means for supporting the open end of the donor vessel in contact with the side wall of the recipient vessel, said support means including

1. means for holding the open end of the donor vessel in sealed contact with the side wall of the recipient vessel without interrupting the flow of biological fluids in the recipient vessel, said support means including

2. an outer tubular member having an outer diameter approximately equal to the inside diameter of the donor vessel and having a plurality of openings extending between the outer surface and the interior of said outer tubular member, and

3. a trocar tip removably connected with a first end of said outer tubular member, said trocar tip being rounded at the outer end to facilitate insertion of the tubular member into the interior of the donor vessel, said trocar tip having a plurality of channels extending between the interior of said outer tubular member and the outer surface of said trocar tip;

b. cutting means for cutting through and removing a portion of the side wall of the recipient vessel circumscribed by the interior of the open end of the donor vessel which is in contact with the side wall of the recipient vessel, said cutting means including

1. an inner tubular member mounted concentrically within said outer tubular member, and

2. cutter head means located at a first end of said inner tubular member for severing and removing a portion of the side wall of the recipient vessel, said cutter head means containing an opening extending between the interior of said inner tubular member and the outer surface of said cutter head means, said inner tubular member being movable between a retracted position wherein said trocar tip may be secured to the interior surface of said outer tubular member adjacent said first end and an extended position wherein the recipient vessel may be severed;

c. selectively controlled suction means connected to the support means for securing the removed wall portion;

d. a positive pressure source;

e. a pressurized lubrication source; and

f. coupling means for selectively connecting said selectively controlled suction means, said positive pressure and said pressurized lubrication sources with the interiors of said inner and outer tubular members, whereby the exterior circumferential surface of said outer tubular member and the outer surface of said trocar tip may be lubricated prior to insertion into the donor vessel by coupling said pressurized lubrication source to the interiors of said inner and outer tubular members and whereby the donor vessel may be drawn into tight engagement with said tubular member and with the recipient vessel when the selectively controlled suction means is connected with the interiors of said inner and outer tubular members to permit the donor vessel to be sealed to the recipient vessel and to

permit the recipient vessel to be severed by the cutting head means and, further, whereby the integrity of the seal between the donor and recipient vessels may be tested before the recipient vessel is severed by connecting the interiors of the inner and outer tubular member with said positive pressure source.

16. An anastomotic apparatus as defined in claim **18** wherein said support means further includes suction support means for supporting said outer tubular member relative to a recipient vessel, said suction support means including means for frictionally engaging the recipient vessel and vacuum passageway means for maintaining said suction support means in frictional contact with said recipient vessel.

17. An anastomotic apparatus for joining the open lumen end of a donor vessel to the side wall of a recipient vessel having a lumen in which biological fluids are flowing, comprising

a. support means for supporting the open end of the donor vessel in contact with the side wall of the recipient vessel, said support means including
   1. an outer member shaped to fit within the lumen of the donor vessel,
   2. a source of vacuum, and
   3. means for selectively connecting said source of vacuum with said outer member to hold the open end of the donor vessel in sealed contact with the side wall of the recipient vessel without interrupting the flow of biological fluids in the recipient vessel; and

b. cutting means positioned substantially within said support means for cutting through and removing a portion of the side wall of the recipient vessel circumscribed by the interior edge of the sealed end of the donor vessel, whereby the vessel lumens may be brought into fluid communication.

18. An anastomotic apparatus as defined in claim **17** wherein said outer member includes an outer tubular member having an outer diameter approximately equal to the inside diameter of the donor vessel.

* * * * *