C. M. STEINMETZ.

DETACHABLE REVERSIBLE CUFF.

APPLICATION FILED SEPT. 26, 1911.

1,068,464.

Patented July 29, 1913.

Fig. 1.

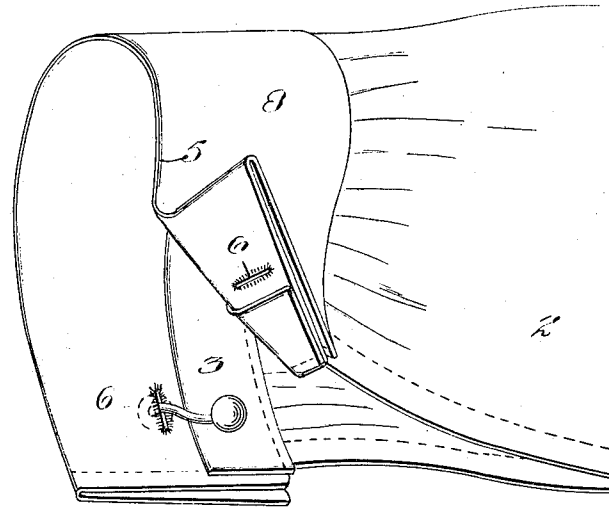

Fig. 2.

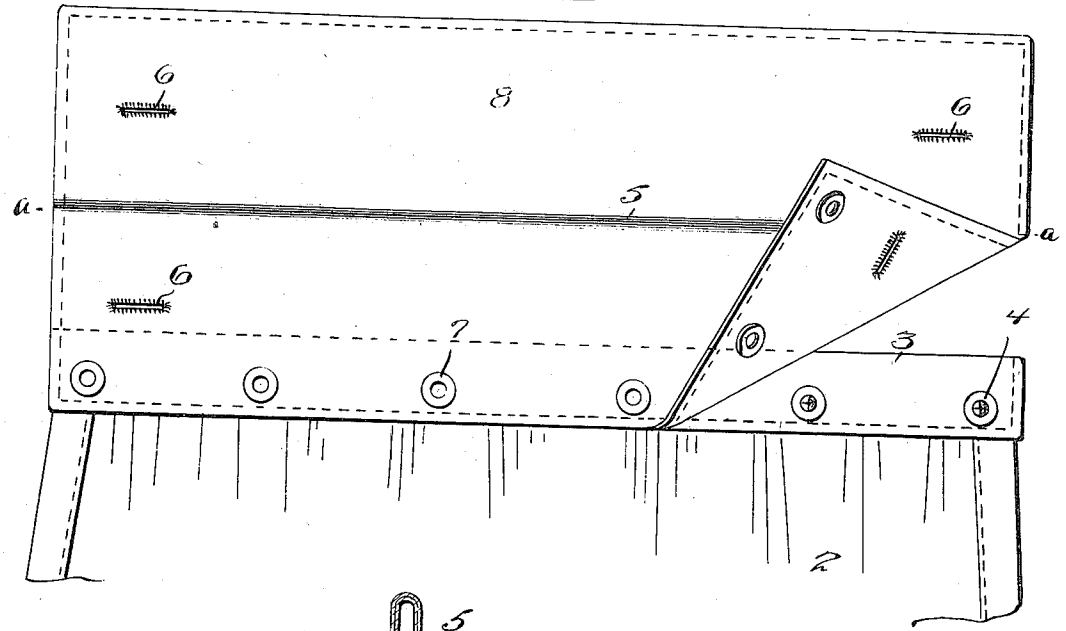

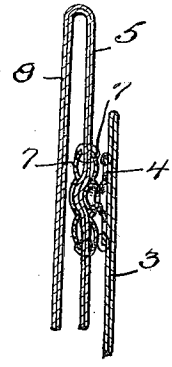

Fig. 3.

Witnesses

Friedman Espey

Juana M. Fallin

Inventor

C. M. Steinmetz

A. M. Stacey, Attorney.

UNITED STATES PATENT OFFICE.

CHARLES M. STEINMETZ, OF WASHINGTON, DISTRICT OF COLUMBIA.

DETACHABLE REVERSIBLE CUFF.

1,068,464. Specification of Letters Patent. Patented July 29, 1913.

Application filed September 26, 1911. Serial No. 651,409.

To all whom it may concern:

Be it known that I, CHARLES M. STEINMETZ, citizen of the United States, residing at Washington, District of Columbia, have invented certain new and useful Improvements in Detachable Reversible Cuffs, of which the following is a specification.

My invention relates to improvements in wearing apparel and particularly to a detachable and reversible cuff applicable to shirtwaists, shirts, etc., and peculiarly designed with reference to soft shirts having refolded cuffs usually of soft material. As commonly made, these refolded cuffs of soft material are sewed permanently to the wristband of the shirt. As a consequence, if the cuffs become dirty, the shirt can not be worn. These soft cuffs are particularly liable to get dirty, and this forms one of the main objections to the use of the soft shirt having these refolded cuffs. Again, if the cuffs become frayed or ragged, the shirt must be thrown away, even though otherwise in a perfectly good condition. Reversible cuffs have, of course, been made wherein the cuff is reversed end for end, but inasmuch as this cuff is attached on the outside of the wristband, a shirt having reversible cuffs of this character can not be worn without a coat as the slight margin of the cuff adjacent to the wristband of the shirt will show.

The primary object of my invention is to overcome these objections and provide a cuff which is not only detachable but in which a fresh face may be presented to the public by turning the cuff inside out.

A further object is to provide a cuff of this character wherein the fastening devices are entirely concealed so that the cuff when in place looks precisely as though it were sewed or otherwise permanently attached to the wristband.

A further object is to so form the cuff and shirt that the fastening devices attaching the cuff to the shirt do not extend through the wristband and into contact with the wrist of the wearer.

My invention is illustrated in the accompanying drawings wherein:

Figure 1 is a perspective view of a portion of a shirt-sleeve with a refolded cuff made in accordance with my invention and attached thereto. Fig. 2 is a fragmentary view of a portion of a shirt-sleeve opened out, and of a refoldable cuff partly attached to the wristband of the shirt-sleeve, said cuff, however, being opened out and not folded. Fig. 3 is an enlarged sectional view through a portion of the cuff and the wristband, and through the attaching means.

Corresponding and like parts are referred to in the following description and indicated in all the views of the accompanying drawings by the same reference characters.

In the drawings, 2 designates part of a shirt-sleeve having a wristband 3 provided with a plurality of attaching members 4. As illustrated, these attaching members have the form of a somewhat bulbous spring stud and are attached to the wristband in any suitable manner. It is to be particularly noted that the spring stud is attached to the exterior face of the wristband and that each stud has a relatively wide base attached to the face of the wristband and not extending therethrough. I do not, however, wish to be limited to this construction.

The cuff is designated 5, and as shown in Fig. 2 is foldable on itself on the line *a—a* so that normally the cuff is refolded upon itself as in Fig. 1. Each end of the cuff is formed with a pair of buttonholes 6, the buttonholes of each pair, when the cuff is refolded, registering with each other to permit the passage of a link. One longitudinal edge of the cuff is provided with a plurality of fastening devices complementary to the fastening devices on the wristband. These fastening devices are preferably spring sockets designated 7 which coact with and are complementary to the spring studs 4. From Fig. 2 it will be seen that these sockets are located on opposite faces of the cuff so that either face of the cuff may be presented to the outside face of the wristband and either set of sockets 7 may be engaged with the studs 4.

While I prefer to use the snap fastenings illustrated in the drawings, I do not wish to be limited to these. I have, however, found them particularly convenient for this purpose as they permit the cuff to be readily attached to the wrist band, hold it securely in place and permit it to be readily detached.

It will be seen from Fig. 1 that when the cuff is in place upon the wristband and refolded upon itself, the fastening devices are entirely concealed by the ply 8 of the cuff, this ply being so wide after the cuff is refolded that it extends down over the sockets 7 attached to the opposite longitudinal edge

of the cuff. When it is desired to reverse the cuff, the cuff is removed from the wristband, folded entirely over so that what was before the inside face becomes the outside face of the cuff, and the cuff is again attached. This is rendered possible by the fact that there are two sets of sockets located on opposite faces of the cuff.

It is to be particularly noted that when the cuff is reversed and refolded, the soiled portion is entirely concealed and is entirely on the inside of the refolded cuff. A plain cuff while it is capable of being reversed end to end is not capable of being refolded and, as a consequence, the soiled part of the cuff is fully displayed. With my improved cuff, not only is the soiled portion of the cuff concealed, but no soiled portion comes in contact with the wrist of the wearer. The cuff to all intents and purposes is as fit for wear as if it was entirely new and fresh.

While I have referred to this cuff as being made of soft material such as flannel, cheviot, madras, etc., it will be entirely obvious that the cuff might be made of starched material but so made as to be folded along the line *a*—*a*.

It will be seen that that portion of the wrist-band coming in contact with the wrist does not have any studs, buttons or other fastening devices and, as a consequence, there is no pressure of these devices against the wrist, as is the case where detachable cuffs are fastened to a shirt-sleeve by means of cuff buttons passing through the wristband. Not only is this so, but it is also true, as I have found by experience, that cuffs of the turned over or refolded style attached in the manner described are much better fitting than cuffs which are permanently attached to the shirt, or cuffs which are attached to the shirt by means of buttons passing through the wristband and only disposed at two points. Not only does my invention permit the cuff to be refolded when soiled, but it also greatly lengthens the wear or life of the shirt or shirtwaist, because the cuffs may be removed and replaced with new cuffs whenever necessary.

What I claim is:

A sleeve the wristband of which is provided on its outer face with a series of fastening devices, a cuff folded to produce a face of substantially a width one-half the width of the entire cuff, securing devices secured in spaced relation adjacent one edge of the cuff and throughout its entire length, said securing devices being engageable from either side of the cuff and disposed to receive the securing devices of the wristband, the free edge of the cuff overlying the wristband and concealing the fastening devices when either of the faces of the cuff are exposed.

In testimony whereof I affix my signature in presence of two witnesses.

CHARLES M. STEINMETZ. [L. S.]

Witnesses:

FREDERIC B. WRIGHT,

W. N. WOODSON.