June 23, 1931. R. T. WATTS 1,811,410

PHONOGRAPH

Filed Feb. 9, 1927 4 Sheets-Sheet 1

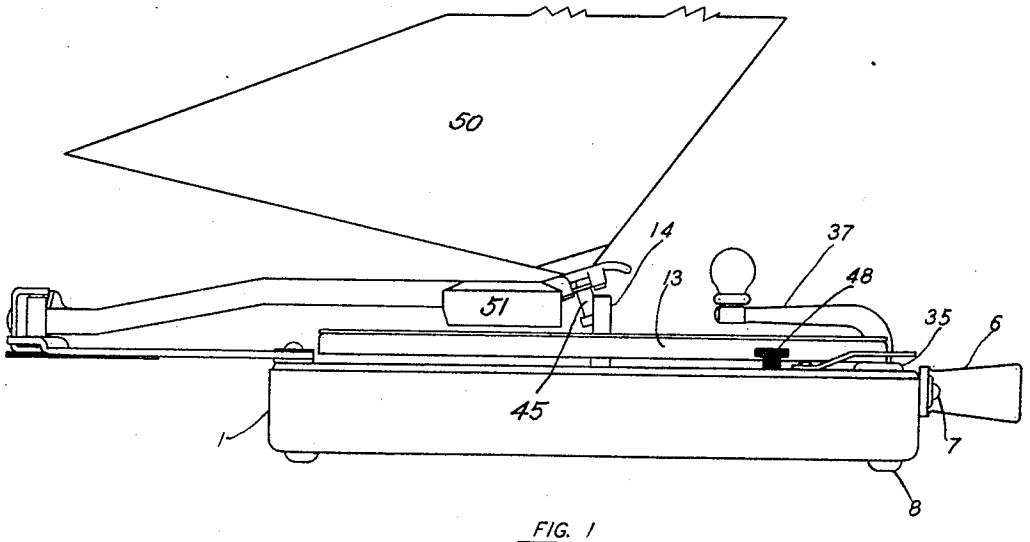

FIG. 1

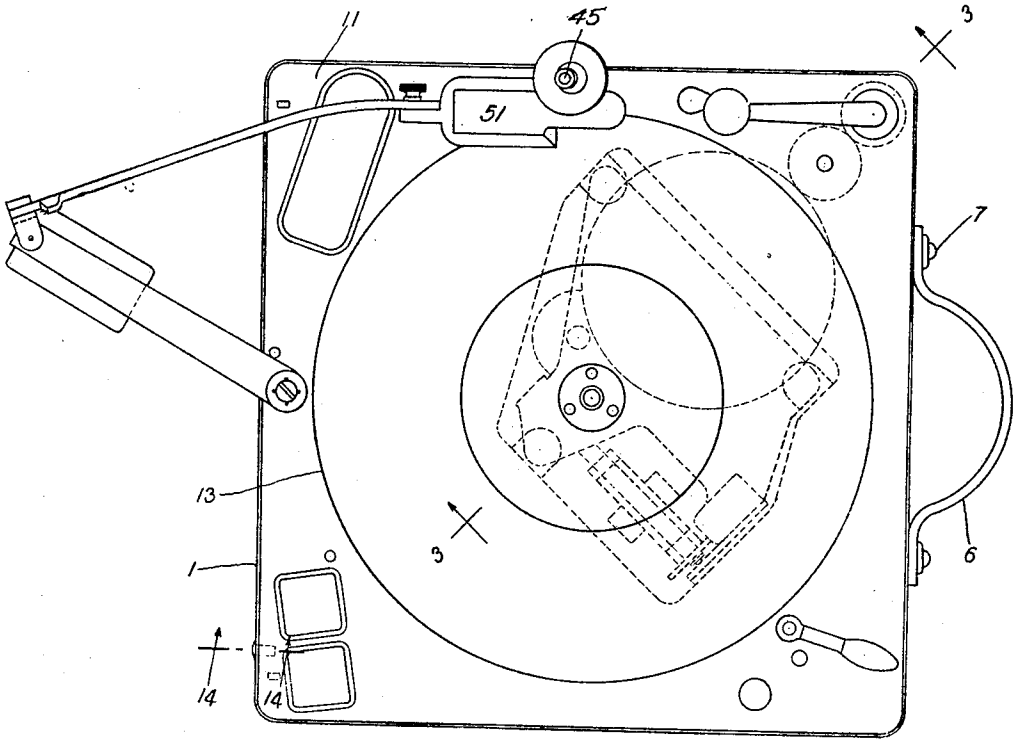

FIG. 2

INVENTOR

Roy T. Watts

BY

William W. Carney

ATTORNEY

June 23, 1931. R. T. WATTS 1,811,410

PHONOGRAPH

Filed Feb. 9, 1927 4 Sheets-Sheet 2

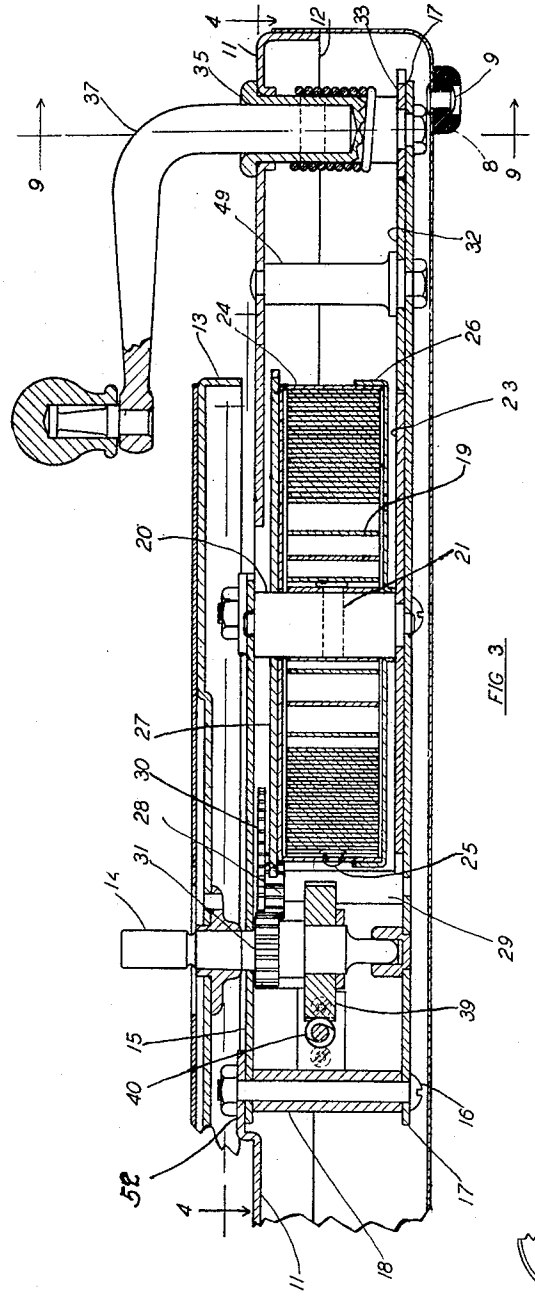

FIG 3

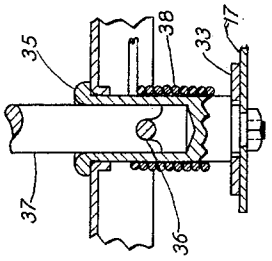

FIG 9

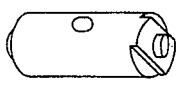

FIG 10

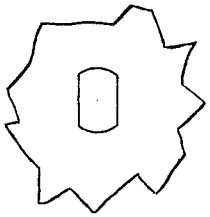

FIG 11

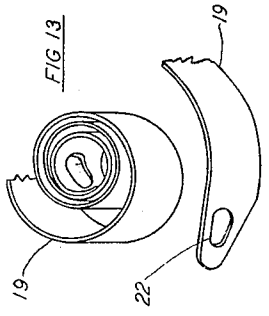

FIG 13

FIG 12

INVENTOR
Roy T. Watts
BY
William W. Varney
ATTORNEY

June 23, 1931. R. T. WATTS 1,811,410

PHONOGRAPH

Filed Feb. 9, 1927 4 Sheets-Sheet 3

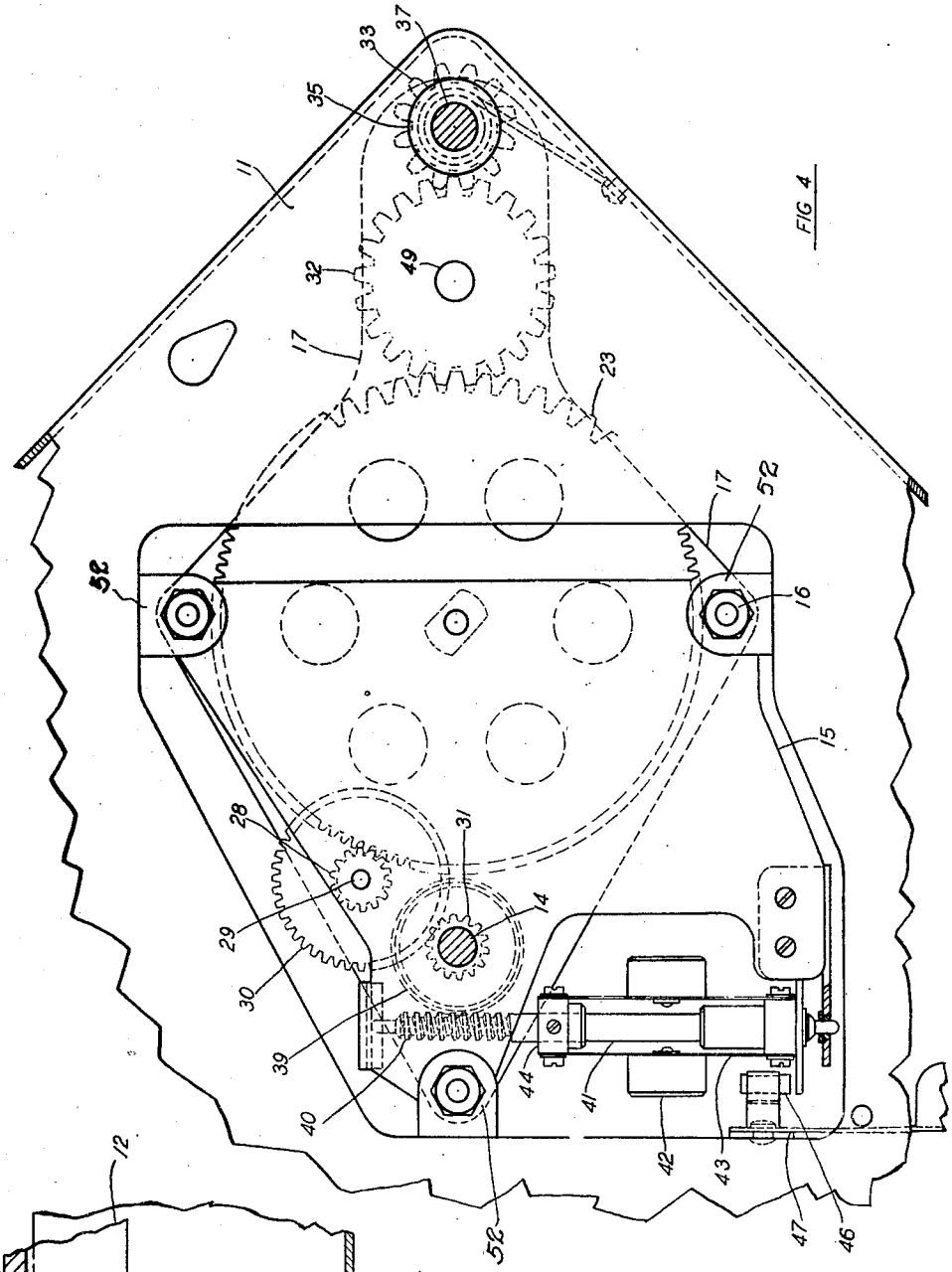

FIG 4

FIG 14

INVENTOR
Roy T. Watts
BY
William W. Varney
ATTORNEY

June 23, 1931. R. T. WATTS 1,811,410

PHONOGRAPH

Filed Feb. 9, 1927 4 Sheets-Sheet 4

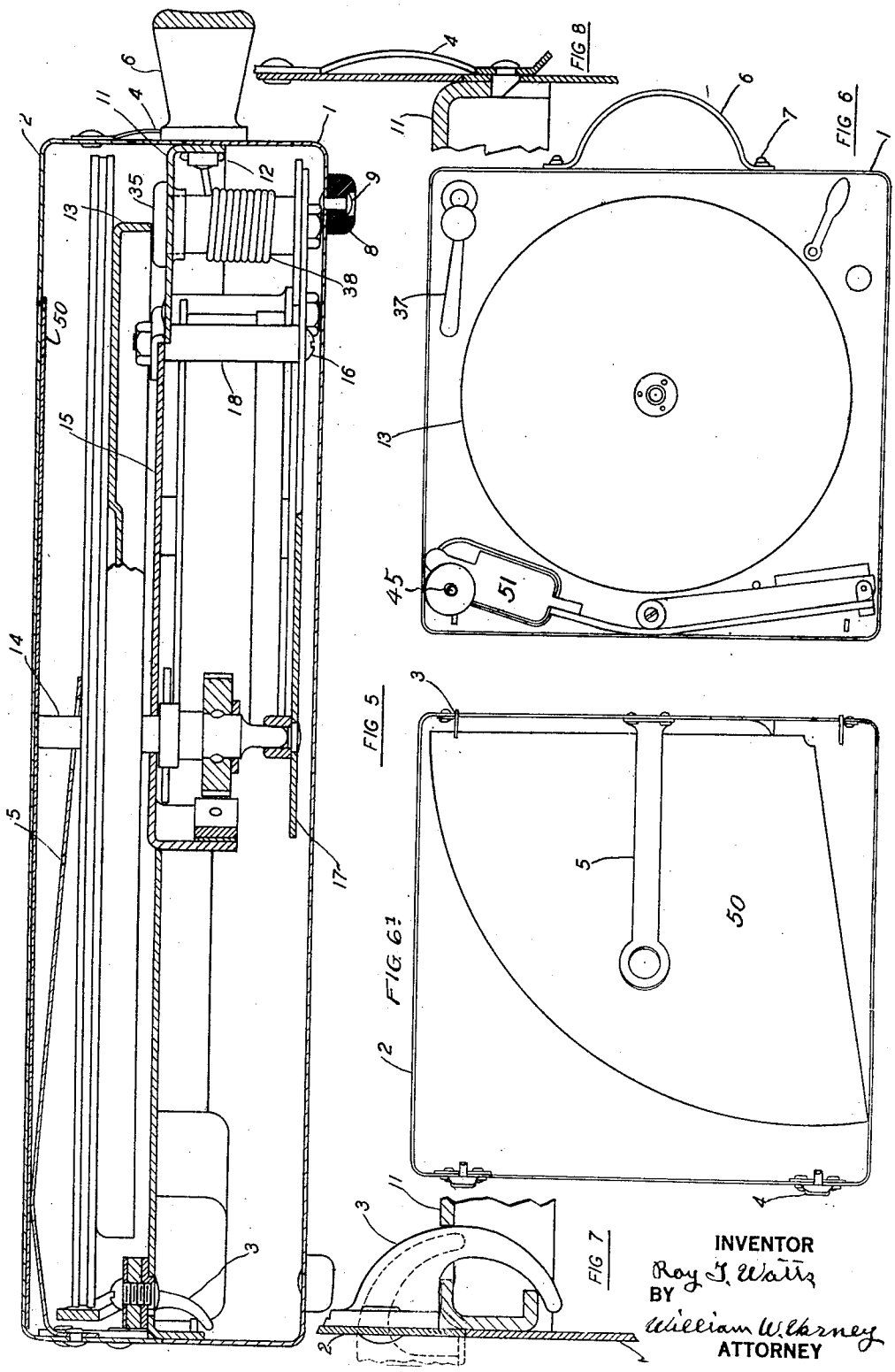

Patented June 23, 1931

1,811,410

UNITED STATES PATENT OFFICE

ROY T. WATTS, OF BALTIMORE, MARYLAND, ASSIGNOR, BY MESNE ASSIGNMENTS, TO WILLIAM W. VARNEY, OF BALTIMORE, MARYLAND

PHONOGRAPH

Application filed February 9, 1927. Serial No. 166,990.

The object of my invention is the construction of an improved portable phonograph.

A further object of my invention is the providing of an improved means of winding phonograph of a portable type.

A further object of my invention is the providing of an improved driving means for a portable phonograph.

A further object of my invention is the providing of certain improvements in the reproducing means of phonographs.

A further object of my invention is the providing of certain improvements in the winding mechanism of phonographs.

A further object of my invention is the adoption, assembly and co-ordination of the winding means, driving means, and reproducing means, in a case of minimum dimensions to produce a practical portable phongraph of superior tone and timbre.

A further object of my invention is the providing a phonograph of portable type, with an improved case to carry said phonograph operative parts, and records to be played thereby.

A further object of my invention is the providing in an organized phonograph an improved assembly of governing and control means for the power actuating means thereof.

A further object of my invention is the providing in a phonograph an improved support for the reproducing means.

A further object of my invention is the providing in an organized phonograph having spring power actuating means an improved handle or means for energizing the same.

With the foregoing and other objects in view, my invention consists of the methods employed, combination and arrangement of systems, apparatus and means as hereinafter specifically provided and illustrated in the accompanying drawings wherein is shown the preferred embodiment of my invention, but it is understood that changes, variations and modifications may be resorted to which come within the scope of the claims hereunto appended.

In the drawings of the herein described embodiment of my invention,

Figure 1 shows my improved phonograph in elevation. Open assembled and in playing condition.

Figure 2 is a plan view of the phonograph shown in Figure 1; with the oscillator removed.

Figure 3 is a sectional view of the phonograph taken through 3—3 of Figure 2, looking in the direction of the arrows;

Figure 4 is a plan view of the parts shown in Figure 3 looking in the direction of the arrows, 4—4;

Figure 5 is a sectional view of the entire phonograph with the cover in position, extra records stored, oscillator in place and various parts housed;

Figure 6 is a reduced plan view of the phonograph with the cover removed, without records, the various parts being housed, ready for covering.

Figure 6[1] is a reduced inverted plan view of the carrying case top 2 showing the folded oscillator 50 held in position for transportation.

Figure 7 is an enlarged view of the detachable holding appliance or hinge for securing the cover in place on its back edge.

Figure 8 is an enlarged view of the holding mechanism for securing the front part of the cover to the body of the box.

Figure 9 is a sectional view in elevation, taken through 9—9 of Figure 3, and shows the winding crank in a view at right angles to that shown in Figure 3, looking in the direction of the arrows.

Figure 10 is a perspective view of the spring barrel shaft removed from the machine.

Figure 11 is a broken-out portion of the center or hub of the winding gear, showing particularly how the spring barrel shaft is driven by the same.

Figures 12 and 13 show the outside and inside securings of the driving spring.

Figure 14 is a view in elevation in section taken through 14—14 on Figure 2, of the motor board holding pins, over which the motor board is secured by piercings in the

edge of the same, thus securing the motor board in the rear of the carrying case bottom.

Similar numerals refer to similar parts throughout the several views.

1 is the carrying case bottom. 2 is the carrying case top. 3 is the carrying case locking hook, secured to the carrying case top by riveting or other suitable means, and operates through an opening in and around the motor board as shown in Figure 7. 4 is the carrying case catch which operates through an opening in the carrying case bottom onto the motor board.

The carrying case top is provided with a record holding spring 5, which bears against the records stored on the turntable shaft, and performs the function also of securing the oscillator in the lid for carrying purposes. It is secured to said top. 6 is the carrying case handle, secured by any suitable means such as carrying handle screws 7, screwed into the motor board through openings in carrying case bottom, 1. 8 are the carrying case feet, preferably of some resilient material such as rubber, secured by a hollow rivet 9 provided with a large head, and secured to carrying case bottom 1. 10 is the motor board holding pin, see Figure 14. 11 is the motor board, which is provided with a flange 12, on all four sides, the flange in the rear being pierced to receive a holding pin 10, and in the front being provided to receive carrying case handle screws 7. This board is the foundation upon which are secured various parts of the phonograph, and forms, with the various parts of the phonograph a complete phonograph unit to be placed in the case as described or any other type or finish of case, as I have found that wooden cases are admirably suited for the purpose where leather covering or decorative work is desired. 13 is the turntable, which is mounted on turntable shaft 14, by means of a tapered fit or other suitable mounting. The turntable is provided with the usual felt on the top surface, and a hub in the center for mounting purposes. 15 is the top motor plate, secured to raised lugs from the motor board 52, by bolts 16. 17 is the bottom motor plate spaced from the top motor plate 15 by means of spacing members 18, through which bolts 16 operate, thus securing the two motor plates in rigid construction, and which are in turn rigidly secured to the motor board. Turntable shaft 14 is mounted through the top motor plate as a bearing, and is supported and operates in a bearing secured in the bottom motor plate. This shaft 14 I have found advisable to make spherical on the bottom for practical reasons. Turntable shaft 14 is provided with teeth to form a pinion 31, these as shown are integral with shaft 14. 19 is the main spring. 20 is the spring barrel shaft, which shaft is mounted to revolve in top and bottom motor plates, 15 and 17 respectively. 21 is an enlarged head stud over which is secured main spring 19 by means of a pear-shaped opening 22. Spring barrel shaft 20 is driven by winding gear 23 in winding, and is secured to the same by a flattened shaft connection as shown in Figures 10 and 11. The outer end of the main spring is secured to the spring barrel 24 by an enlarged head stud 25, over which it is hooked by an opening therein. 26 is the spring barrel cover which tightly fits the spring barrel for retaining the grease for lubrication purposes therein and also acts as a bearing in conjunction with the spring barrel 24 for the spring to operate in. The spring barrel is secured to or formed integral with the spring barrel gear 27, which gear drives pinion 28 mounted on shaft 29 on which shaft is secured gear 30 which gear operates pinion 31. In construction gear 30 and pinion 28 are integral. 32 is an intermediate gear driving winding gear 23 and is driven by pinion 33. Gear 32 is mounted to operate on intermediate gear shaft 49 which shaft is stationary and secured rigidly to the motor board.

35 is the winding sleeve, flanged at its upper end to form a top bearing on the motor board, the motor board being pierced and flanged down to form a top bearing for the sleeve. The bottom end of the sleeve is solid and formed to mount pinion 33 thereon and formed to a bearing to operate in bottom motor plate 17 and provided with a threaded portion and nut secured thereon to prevent the withdrawal of the same. In this sleeve 35 is a pin 36 over which straddles winding crank 37 for winding purposes. 38 is a wind check spring, one end of which is secured to motor board and the other end of which is unsecured but wound tight around said sleeve 35. On turntable shaft 14 is secured spiral driving gear 39 which drives the governor spiral or worm 40, which worm is secured to or formed integral with governor shaft 41, which shaft is mounted at its ends in bearings secured to the top motor plate. 42 are governor weights, mounted on governor springs 43, one end of which springs are secured to collar 44 secured to the governor shaft 41, the other end of said springs being secured to sliding collar; 46 being the brake to operate on said collar to regulate speed and being adjustable by means of speed control lever 47, operated by screw 48.

While I claim nothing in this application concerning the reproduction mechanism, such as the oscillator and the reproducer head, the same being the subject matter of other applications, I will simply briefly enumerate some of the parts.

50 is the oscillator, as shown a truncated cone of flexible material carried by reproducer head 51 and detachable therefrom, and in the instrument described is folded three-fold and placed in the cover under spring 5, when not in use. It is broken off as shown in Fig. 1 and folded as shown in Figs. 5 and 6^1, and is not further described or illustrated, as the same is the subject matter of Patent No. 1,703,664, to be issued Feb. 26, 1929. Reproducer head 51 is carried on swinging arm 52 and swings across the record; concerning this I claim nothing herein, as the same is fully covered in co-pending applications. The oscillator above referred to is a device which I term an oscillator for setting up air vibrations by being oscillated by the reproducer needle.

For general information concerning the operation of this phonograph described, oscillator 50 is carried by bell-crank 45 fulcrumed on reproducer head 51, said bell-crank carrying said oscillator at one end and a needle operating in the record at the other end. This, also, is fully described in co-pending applications, and nothing is claimed herein concerning the same.

I have not attempted to describe other details of the phonograph, such as the needle box, storage box, governing and relief controls, other than what is necessary to understand the invention.

Having thus described my invention what I claim and desire to secure by Letters Patent is—

1. In a phonograph provided with a turntable operated by gears operating in a plane parallel with the plane of operation of said turntable, a spring driving said gears and a winding mechanism for winding said spring operated by gears operating in a plane parallel to said plane of operation of said turntable, and a crank for turning one of said gears operating above the plane of operation of said turntable.

2. In a phonograph provided with a turntable and means for operating the same, mechanical means for energizing said operating means, operative by a shaft parallel with the turntable shaft, and a crank for operating said shaft operating above the plane of operation of said turn-table.

3. In a phonograph having a turntable and a spring motor, means for winding said spring motor consisting of a sleeve rotatively operative parallel to the axis of the spring of said motor, forming a shaft, which shaft by means of gearing winds said motor and means for turning said sleeve from above the plane of rotation of said turn-table consisting of a winding-key entering said sleeve and extending above said turn-table and means for preventing said key from revolving in said sleeve.

ROY T. WATTS.