(12) INTERNATIONAL APPLICATION PUBLISHED UNDER THE PATENT COOPERATION TREATY (PCT)

(19) World Intellectual Property Organization
International Bureau

(43) International Publication Date
23 June 2005 (23.06.2005)

PCT

(10) International Publication Number
WO 2005/056225 A1

(51) International Patent Classification[7]: B23D 45/16, B28D 1/04, F02B 63/02

(21) International Application Number: PCT/SE2003/001923

(22) International Filing Date: 9 December 2003 (09.12.2003)

(25) Filing Language: English

(26) Publication Language: English

(71) Applicant *(for all designated States except US)*: **AKTIEBOLAGET ELECTROLUX** [SE/SE]; S-105 45 Stockholm (SE).

(72) Inventors; and

(75) Inventors/Applicants *(for US only)*: **JAKOBSSON, Anders** [SE/SE]; Lämmagården Bäckafall 2, S-544 93 Hjo (SE). **KÖHLER, Anders** [SE/SE]; Gamla Strandlinjen 4D, S-433 35 Partille (SE). **REUTERBERG, Anders** [SE/SE]; Norra Häcksjöbäcksvägen 10B, S-443 32 Lerum (SE). **SUNDBERG, Niklas** [SE/SE]; Safirgatan 16B, S-441 45 Alingsås (SE).

(74) Agent: **ANDERSSON, Lars**; AB Electrolux, Husqvarna AB, S-433 81 Jonsered (SE).

(81) Designated States *(national)*: AE, AG, AL, AM, AT (utility model), AT, AU, AZ, BA, BB, BG, BR, BY, BZ, CA, CH, CN, CO, CR, CU, CZ (utility model), CZ, DE (utility model), DE, DK (utility model), DK, DM, DZ, EC, EE (utility model), EE, ES, FI (utility model), FI, GB, GD, GE, GH, GM, HR, HU, ID, IL, IN, IS, JP, KE, KG, KP, KR, KZ, LC, LK, LR, LS, LT, LU, LV, MA, MD, MG, MK, MN, MW, MX, MZ, NI, NO, NZ, OM, PG, PH, PL, PT, RO, RU, SC, SD, SE, SG, SK (utility model), SK, SL, SY, TJ, TM, TN, TR, TT, TZ, UA, UG, US, UZ, VC, VN, YU, ZA, ZM, ZW.

(84) Designated States *(regional)*: ARIPO patent (BW, GH, GM, KE, LS, MW, MZ, SD, SL, SZ, TZ, UG, ZM, ZW), Eurasian patent (AM, AZ, BY, KG, KZ, MD, RU, TJ, TM), European patent (AT, BE, BG, CH, CY, CZ, DE, DK, EE, ES, FI, FR, GB, GR, HU, IE, IT, LU, MC, NL, PT, RO, SE, SI, SK, TR), OAPI patent (BF, BJ, CF, CG, CI, CM, GA, GN, GQ, GW, ML, MR, NE, SN, TD, TG).

Published:
— *with international search report*

For two-letter codes and other abbreviations, refer to the "Guidance Notes on Codes and Abbreviations" appearing at the beginning of each regular issue of the PCT Gazette.

(54) Title: PORTABLE WORKING MACHINE

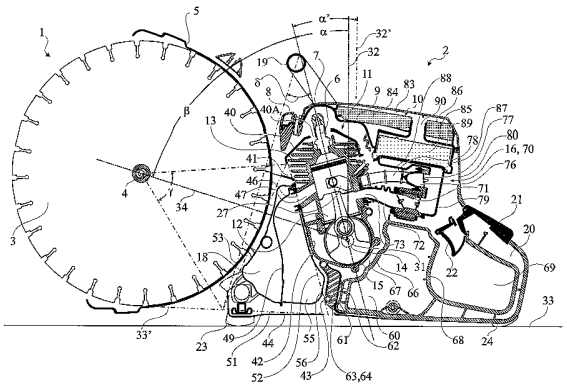

(57) Abstract: A portable working machine comprising a tool unit (1) with a circular, disc-shaped tool (3), which can be rotated about an axis of rotation (4), which is horizontal in the normal upraised position of the machine, and a machine unit (2), which includes at least a filter system (10), which is at least partly accommodated in a top part of the machine unit, an internal combustion engine (11) with an engine cylinder (13) with bore (12) having a centre line (30), a crankshaft (14) and a crankcase (15), an assembly (16) comprising members for supplying air and fuel to the engine, a fuel tank (17), a muffler (18), handles (19,20), controls (21,22), and preferably supports (23, 24) on the underside of the machine unit for allowing upright positioning of the machine on a flat ground, and a power transmission between the machine unit and the tool unit. Especially the cylinder bore (12) is inclined forwards in a direction towards the tool unit, such that the centre line (30) of the cylinder bore forms a tilt angle (α) larger than zero, in said direction, to a perpendicular to any or both of the following lines: a) a base line (33) , which is a line coinciding with a horizontal surface on which the machine is resting in an upright position, when said supports on the underside of the machine unit contact said surface, and b) a tangential line (33') extending from a peripheral point of the tool, on the lower part of the tool when the machine has an upright position, to the bottom side of a rear support (24) of the machine unit.

WO 2005/056225 A1

PORTABLE WORKING MACHINE

Techincal field

The present invention relates to a portable working machine comprising a tool unit with a circular, disc-shaped tool, which can be rotated about an axis of rotation, which is horizontal in the normal upraised position of the machine, and a machine unit, which includes at least a filter system, which is at least partly accommodated in a top part of the machine unit, an internal combustion engine with an engine cylinder with bore having a centre line, a crankshaft and a crankcase, an assembly comprising members for supplying air and fuel to the engine, a fuel tank, a muffler, handles and controls, and preferably supports on the underside of the machine unit for allowing upright positioning of the machine on a flat ground, and a power transmission between the machine unit and the tool unit.

Background of the invention

Portable working machines of the above defined type are known since long. They are often used for cutting concrete and similar materials. The cutting creates a lot of abrasive dust. Without air filtration the engine will wear out in less than half an hour of operation. Efficient filters are therefore vital and are attained mainly through a big filter volume. An increased filter volume will increase the service life of the machine. For example, a machine of this type is described in US-A-5 438 965. This machine, its precursors and successors, belonging to the applicant's "Partner® K650-family",and variants of it, have been and are still widely used in the construction industry for cutting concrete and the like, and also by fire brigades for cutting holes in roofings or for penetrating vehicle wrecks, and similar tasks. It has a rear handle protruding backwards from the machine unit. This ensures a long distance between front and rear handles enabling a comfortable and precise control of the machine. This is an advantage compared to a similar type of machine that instead has its rear handle protruding upwards from the machine unit and therefore has a much shorter distance between the handles. However the machine described in US-A 5,438,965 also has some shortcomings, which mainly have to do with a traditional

thinking as far as the general layout of the machine unit is concerned. For example, the engine cylinder with its bore is conventionally inclined somewhat rearwards relative to a base line of the entire machine and/or to the bottom of the machine unit. This tends to limit the available space for other important components of the machine unit, such as an assembly which comprises members for supplying air and fuel to the engine, including a carburettor and a filter system for a given overall machine length. This in turn restricts the possibilities to give the said components an appropriate design and shape.

Brief disclosure of the invention

It is the purpose of the invention to address the above complex of problems. To that end, according to a first aspect of the invention, the cylinder and its bore is inclined forwards in a direction towards the tool unit, such that the centre line of the cylinder bore forms a tilt angle larger than zero, in said direction, to a line which is perpendicular to any or both of the following lines:

a) a base line , which is a line coinciding with a horizontal surface on which the machine is resting in an upright position, when said supports on the underside of the machine unit contact said surface, and

b) a tangential line extending from a peripheral point of the tool, on the lower part of the tool when the machine has an upright position, to the bottom side of a rear support of the machine unit.

Preferred or recommended tilt angles are specified in appending, independent claims.

According to another aspect of the invention, a front side of the engine, including the front side of the cylinder and the front side of the crankcase, as seen in a plane through the centre line and perpendicular to the axis of rotation of the tool, lies in an inclined plane which is substantially parallel with the inclined centre line of the engine cylinder. The muffler is accommodated in a space which has the substantial shape of a triangle in a cross section of said space perpendicular to said axis of rotation and located behind a disc guard, which triangle has one corner pointing upwards when the machine has an upright position, a front side facing the tool unit, a rear side, at least a top part of which is facing said inclined front sides of the cylinder block and the crankcase, and a base which faces said base line. The said space may be comparatively large and may be substantially occupied by the muffler, which allows

the muffler to be afforded a sufficient size and a suitable design, which may make the muffler more efficient than is possible in existing machines of the present type, as far as sound attenuation is concerned.

Another way of describing the tilt of the engine and the related design and accommodation of the muffler is to state that a line extending between and defined by the foremost point of the muffler and the foremost point of the machine unit forms an angle δ to the centre line of the cylinder bore, which angle δ amounts to 10-45 degrees, preferably 15-30 degrees.

A preferred design and positioning of the muffler are stated in the appending claims.

Another aspect of the invention concerns the design and positioning of the fuel tank in the machine unit. According to a preferred embodiment, a rear bottom part of the muffler extends rearwards under the crank case, while a front bottom part of the fuel tank extends forwards under the crank case, where said front side of the fuel tank faces the rear side of the lower part of the muffler. According to the same embodiment, a heat insulation is provided in a gap between said front and rear sides of the fuel tank and muffler, respectively. Further, said embodiment also allows the accommodation of the crankcase above said rearward and forwards extending parts of the muffler and the fuel tank, respectively. Further the muffler, according to an aspect of the invention, has a forwards inclined side, while the fuel tank has a front, rearwards inclined size, such that the crank case can be accommodated between said inclined sides, above said rearwards and forwards projecting parts of the muffler and fuel tank, respectively. These arrangements means a very efficient utilization of available spaces for the accommodation of the muffler, the cylinder block, the crankcase and the fuel tank, which increases the space, which is available between a rear wall of the machine unit and the inclined cylinder for other functional components of the machine unit. This space, according to still another aspect of the invention, is utilized for the accommodation of the said assembly for supplying air and fuel to the engine, and it also allows improvements as far as the design of this assembly is concerned. Also at least part of the filter system, particularly a main filter, may be accommodated in said space. This means that the total filter volume can be increased thereby increasing service life of the engine, or that the machine can be made shorter and therefore easier to handle in a narrow space like a trench for a pipe to be cut. Assuming then a specific filter volume to be used. Improvements of said

unit for supplying air and fuel to the engine may include any or all of the following features: placing the carburettor at a comparatively long distance from the cylinder, i.e. placing it "cold" which improves the restart of the engine in hot conditions; and employment of airhead technique, which reduces the emission of pollutions with the exhaust gas from two-stroke engines. In this connection it shall be stated that the employment of airhead technique is favourable but an option, not a prerequisite of the invention. Conventional two-stroke combustion engines may be used as well, and even four-stroke combustion engines.

Other aspects, achievements and characteristic features of the invention are apparent from the appending claims and from the following description of a preferred embodiment of the invention.

Brief description of the drawings

In the following description of a preferred embodiment, reference will be made to the accompanying drawings, in which,

Fig. 1 is a side elevation of the portable working machine according to the preferred embodiment of the invention as viewed from the left;

Fig. 2 is a side elevation of the machine as viewed from the right,

Fig. 3 is a bottom view of the machine along the line III-III in Fig. 1;

Fig. 4 is a top view of the machine, a top cover being removed;

Fig. 5 shows the machine in a longitudinal cross section along the line V-V in Fig. 4, partly schematically;

Fig. 6 shows a muffler as viewed from the front;

Fig. 7 is a side elevation of the muffler as viewed along the line VII-VII in Fig. 6; and

Fig. 8 is a perspective view of the muffler as viewed obliquely from the right and from the rear.

Description of the preferred embodiment

The portable working machine shown in Fig. 1-Fig. 3 comprises a tool unit 1 and a machine unit 2. A rear part of the machine is where handle 20 with controls 21, 22 is located. The tool unit 1 is provided with a circular disc shaped tool 3 in the form of a diamond equipped cutter disc, which can be rotated about an axis of

rotation 4, which is horizontal in the normal upraised position of the machine, as shown in Fig. 1 and Fig. 2. A disc guard is designated 5.

The machine unit 2, Fig. 5, includes a filter system 10, a two-stroke internal combustion engine 11 with an engine cylinder 13 with a cylinder bore 12, a crankshaft 14 and a crankcase 15, an assembly 16 for supplying air and fuel to the engine, a fuel tank 17, a muffler 18, handles 19, 20, controls 21, 22, and supports 23, 24 on the underside of the machine unit 2 for allowing upright positioning of the machine on a flat ground. A tool carrier (cutter arm) 25, Fig.2, unites the machine unit 2 and the tool unit 1. An endless driving belt 26 transmits the power from the machine unit 2 to the cutter disc 3 in a manner known per se.

The centre line 30 of the engine cylinder 12 coincides with the axis of rotation 31 of the crankshaft 14 and with the central, longitudinal, vertical plane which corresponds to the view along the line V-V in Fig. 4. The cylinder 13 and the crankcase 15 are tilted forwards. The tilt angle α between the centre line 30 of the engine cylinder and a perpendicular 32 to a base line 33 or base plane amounts to 15 degrees according to the embodiment. The base plane 33 is the horizontal plane on which the front and rear supports 23 and 24 of the machine unit are resting as shown in Fig. 5. It should be understood that the reference to the base line/plane 33 in order to describe the degree of tilt of the cylinder 13 and the crankcase 15 presupposes that the height of the supports 23 and 24 are moderate. If the front supports 23 would be much higher than the rear support 24, e.g., if the front supports would consist of long, unfoldable legs, while the rear support is just a heel of no or negligible height, the above definition of the tilt angle α does not provide true information about the degree of tilt of the engine cylinder and crankcase assembly. In this case therefor, reference is instead made to a line 33', which is a tangential line extending from a peripheral point of the cutter disc 3, on the lower part of the cutter disc when the machine has an upright position, to the bottom side of the rear support 24 of the machine unit. It should in this connection also be understood the rear support need not consist of a protrusion in the form of a heel or the like, but may as well consist of just a piece of the bottom of the machine unit, which contacts the ground or base plane 33. The angle of tilt, α', between the centre line 30 and a perpendicular 32' to the tangential line 33', is about 18 degrees.

Assuming that the axis of rotation 31 of the crankshaft 14 is located at a level above the base plane 33, which level does not particularly deviate from what is normal practice in working machines of the present type, also the line 34, which extends between the axis of rotation 4 of the cutter disc 3 and the axis of rotation 31 of the crankshaft 14, can be used as a reference line for describing the degree of tilt of the engine 11. According to the embodiment, the angle β of inclination between the centre line 30 of the engine cylinder 12 and the said connection line 34 is about 58 degrees.

The top of the cylinder 13 is covered by a cap 40 for directing cooling air to the cooling fins of the cylinder. A front part of the cap 40 and a section of the cylinder 13 beneath the cap 40 face the tool unit 1 at a moderate distance from the disc guard 5. The spark plug 6 of the engine extends through a hole 40A in the top of the cap and is pointing obliquely up in the very front top corner 8 of the machine unit 2, where the top and the front side of the machine unit meet, covered by a cupola-like elevation 7 in the front part of a filter bottom 9, included in the filter system 10.

The front side 41 of the tilted engine 11 (the cylinder 13 and the crankcase 15) is parallel with the inclined centre line 30 of the cylinder bore 12. The front side 41, in other words, is also inclined, such that it forms an angle of 75 degrees to the horizontal plane. A protrusion 43 on the crankcase projects downwards, approximately in a direction such that it forms an extension of the front side 41 of the engine 11. A bottom plate of the machine unit 2 is designated 44.

The space above the front part of bottom plate 44, between the engine 11 and the disc guard 5 has the substantial shape of a triangle. A first side 51 is defined by the front part of the base plate 44. A second side 52 is defined by the front side 41 of the engine and the front side of the protrusion 43. Finally, the third side 53 of the conceived triangle is defined by a section of the cutting blade guard, corresponding to a sector angle γ, Fig. 5, of about 60 degrees according to the embodiment. The considerable space, which is available in the longitudinal direction between the engine 11 and the tool unit 1, represented by the said conceived triangle, is due to the tilt of the engine 11 according to the invention. Also the available space in the cross direction is considerable.

According to an aspect of the invention, the muffler 18 is accommodated in the above discussed, approximately triangular space, and is designed such that it will substantially occupy this space. The resulting shape of the muffler, in a cross section of the muffler, corresponding to the central, longitudinal, vertical section of

the machine, can also be described as the shape of a longitudinal section of a pear, Fig. 5, Fig. 7 and Fig. 8.

A major part of a rear side 42 of the muffler is parallel with the second side 52 of the conceived triangle. The bottom section of the muffler 18 widens forward as well as rearwards, including a bottom part 55 which extends rearwards under the crankcase 15 towards the protrusion 43. A rear side 56 of the bottom part 55 faces the protrusion 43. The concave front side 45 of the muffler 18 runs parallel with the disc guard 5 within a major part of the sector angle γ, adjacent to the third side 53 of the conceived triangle.

An entrance port 46 is provided in the rear side 42 of the muffler, in "the tip of the pear", facing an exhaust port 47 of the cylinder. This is a convenient location of the entrance port. From the tip portion of the muffler, the exhaust gases are directed down into the voluminous body of the muffler. There is a smooth turn of the gas flow down into a first section of the muffler divided by baffle 49. This smooth turn results in a comparatively low pressure loss. The exhaust gas leaves the second section of the muffler through an exhaust pipe 48 in the bottom, left part of the muffler.

The pear-like shape of the muffler in the section shown in Fig. 5 also means that the contour of the muffler in said cross section has a point of balance (centre of gravity) in the main bottom part of the muffler, i.e. at a fairly low level. As a matter of fact, the point of balance of the muffler will adopt a position well below the level of the axis of rotation of the crankshaft, and even below the entire crankcase, when the machine is in an upright position. This feature indicates that the muffler indeed is located at a level in the machine which is unconventionally low.

The fuel tank 17, which is made of an impact resistant plastic material, has a design in a longitudinal, vertical cross-section, which – mirror-invertedly - has great similarities with that of the muffler 18. Thus the fuel tank has a front bottom part 60 which extends forwards under the crankcase 15. A metal plate 62 is provided in front of the front side 61 of the front bottom part 60. The plate 62 and the protrusion 43 are parallel, forming a gap 63 between them. The gap 63 has a sufficient width, when filled with a heat insulating material 64, to provide efficient heat insulation between the hot muffler 18 and the fuel tank 17. A concave wall portion of the fuel tank facing the crankcase 15, and following the contour thereof, is designated 66. The inclined wall 42 of the muffler and the concave wall 66 of the fuel tank define between them a space 67, tailored for the crankcase 15. A rear wall 68 of the fuel tank

is also concave, defining the front of a space 69, which is a fair size for readily receiving a foot of an operator, who is going to start the engine.

Above the fuel tank 17 there is a space 70, which also is a good size, especially in the longitudinal direction, due to the inclination of the engine 11. The assembly 16 for the supply of air and fuel to the engine 11 is accommodated in this space 70, between the fuel tank 17 and the filter system 10. The assembly 16 includes a carburettor 71 and an intake pipe 72 extending between the carburettor and an induction port 73 of the cylinder. The engine 11, according to the preferred embodiment, is a crankcase scavenged two-stroke internal combustion engine employing air head technique. Therefor, the cylinder 13 is provided with transfer ducts (not shown), which have ports in the engine's cylinder wall, and therefore the assembly 16 also includes an air inlet 76 equipped with a restriction valve 77 and two parallel connecting ducts 78 leading to connecting ports in the cylinder wall and via piston recesses to the transfer channels. So called reed valves could also be used. Additional air is therefore supplied to the transfer channels from the air inlet 76 via at least one connecting duct 78 located in the vicinity of the intake pipe 72. The tilted cylinder is an advantage considering the extra space available for filters and intake system.

The carburettor 71, which is of a conventional type including a gas valve and a choke valve, the air inlet 76 with the restriction valve 77, the intake pipe 72 and the connecting ducts 78 are assembled and mounted on a bracket 79. The bracket 79 in turn is mounted in a rear part of the space 70, near a rear wall 80 of the machine unit. This – and the considerable longitudinal extension of the space 70, which is promoted by the inclination of the cylinder 13 – allows the carburettor 71 to be located at a fairly long distance from the cylinder 13, and also allows the connecting ducts to be fairly long. Both these features are important. A "cold" location of the carburettor at quite a distance from the hot cylinder promotes good hot restart performance of the engine, and long connecting ducts promote a proper functioning of the air-head technique.

In the filter system 10, the filter bottom 9 is covered by a top cover 83. In an upper filter chamber 86 between the top cover 83 and the filter bottom 9, a pre-filter 84 is provided at the rear of the cupola 7, extending all the way from the cupola 7 to the rear top corner of the machine unit 2. The pre-filter 84 consists of oil-filled foamed plastic. A main filter 85 is provided under the rear part of the filter bottom 9,

enclosed in a lower filter chamber 89 by the filter bottom 9, a frame 87 which extends downwards from the filter bottom 9, and a horizontal part 88 of the bracket 79.

The upper and lower filter chambers 86 and 89 communicate via a passage 90 through the filter bottom 9.

List of reference numerals

	1.	tool unit	31	axis of rotation of crankshaft
	2.	machine unit	32	perpendicular
5	3.	tool	32'	ditto
	4.	axis of rotation	33	base line/plane
	5.	disc guard	33'	tangential line
	6.	spark plug	34	connecting line
	7.	cupola	35	vacant
10	8.	front top corner	36	vacant
	9.	filter bottom	37	vacant
	10.	filter system	38	vacant
	11.	engine	39	vacant
	12.	cylinder bore	40	cap (40A hole)
15	13.	engine cylinder	41	front side of engine
	14.	crankshaft	42	rear side of muffler
	15.	crankcase	43	protrusion
	16.	assembly for air and fuel	44	bottom plate
	17.	fuel tank	45	front side of muffler
20	18.	muffler	46	entrance port
	19.	front handle	47	exhaust port
	20.	rear handle	48	exhaust pipe
	21.	control	49	baffle
	22.	control	50	vacant
25	23.	front supports	51	first side of triangle
	24.	rear support	52	second side
	25.	cutter arm/tool carrier	53	third side
	26.	driving belt	54	vacant
	27.	piston recess	55	protruding bottom part
30	28.	vacant	56	rear side of protrusion 55
	29.	vacant	57	vacant
	30.	centre line	58	vacant

60 Front bottom part
61 Front side
62 Metal plate
63 Gap
64 Heat insulation
65
66 Concave wall
67 Space for crankcase
68 Rear wall
69 Space for foot
70 Space for assembly 16
71 Carburettor
72 Intake pipe
73 Port
74 Ports
75
76 Air inlet
77 Restriction valve
78 Connecting ducts
79 Bracket
80 Rear wall
81
82
83 Top cover
84 Pre-filter
85 Main filter
86 Upper filter chamber
87 Frame
88 Horizontal part of bracket
89 Lower filter chamber
90 Passage

CLAIMS

1. Portable working machine comprising a tool unit (1) with a circular, disc-shaped tool (3), which can be rotated about an axis of rotation (4), which is horizontal in the normal upraised position of the machine, and a machine unit (2), which includes at least a filter system (10), which is at least partly accommodated in a top part of the machine unit, an internal combustion engine (11) with an engine cylinder (13) with bore (12) having a centre line (30), a crankshaft (14) and a crankcase (15), an assembly (16) comprising members for supplying air and fuel to the engine, a fuel tank (17), a muffler (18), handles (19,20), controls (21,22), and preferably supports (23,24) on the underside of the machine unit for allowing upright positioning of the machine on a flat ground, and a power transmission between the machine unit and the tool unit, c h a r a c t e r i s e d in that the cylinder bore (12) is inclined forwards in a direction towards the tool unit, such that the centre line (30) of the cylinder bore forms a tilt angle (α) larger than zero, in said direction, to a perpendicular to any or both of the following lines:

a) a base line (33) , which is a line coinciding with a horizontal surface on which the machine is resting in an upright position, when said supports on the underside of the machine unit contact said surface, and

b) a tangential line (33') extending from a peripheral point of the tool, on the lower part of the tool when the machine has an upright position, to the bottom side of a rear support (24) of the machine unit.

2. Machine according to claim 1, c h a r a c t e r i s e d in that the tilt angle to said perpendicular to the base line is 5-40 degrees.

3. Machine according to claim 2, c h a r a c t e r i s e d in that the tilt angle to said perpendicular to the base line is 5-30 degrees.

4. Machine according to claim 3, c h a r a c t e r i s e d in that the tilt angle to said perpendicular to the base line is 10-20 degrees.

5. Machine according to claim 1, c h a r a c t e r i s e d in that the tilt angle to said perpendicular to the tangential line is 7-40 degrees.

6. Machine according to claim 5, c h a r a c t e r i s e d in that the tilt angle to said perpendicular to the tangential line is 7-30 degrees.

7. Machine according to claim 6, c h a r a c t e r i s e d in that the tilt angle to said perpendicular to the tangential line is 10-25 degrees.

8. Machine according to claim 7, c h a r a c t e r i s e d in that the tilt angle to said perpendicular to the tangential line is 13-23 degrees.

9. Machine according to any of claims 1-8, c h a r a c t e r i s e d in that the centre line of the engine cylinder forms an angle of inclination (β) to a connection line (34) between the axis of rotation (4) of the tool and the axis of rotation (31) of the crankshaft, said angle of inclination being smaller than 80 degrees.

10. Machine according to claim 9, c h a r a c t e r i s e d in that said angle of inclination to said connection line is 45-70 degrees.

11. Machine according to claim 10, c h a r a c t e r i s e d in that said angle of inclination to said connection line is 50-65 degrees.

12. Machine according to any of claims 1-11, c h a r a c t e r i s e d in that a front side (41)s of the engine (11) as seen in a plane through the centre line (30) and perpendicular to the axis of rotation (4) of the tool (3) lies in an inclined plane which is substantially parallel with the inclined centre line of the engine cylinder, and that the muffler is accommodated in a space which has the substantial shape of a triangle in a cross section of said space perpendicular to said axis of rotation (4) and located behind a disc guard (5), which triangle has one corner pointing upwards when the machine has an upright position, a front side (53) facing the tool unit, a rear side (52), at least a top part of which is facing said inclined front side of the engine, and a base side (51) which faces said base line.

13. Machine according to claim 12, c h a r a c t e r i s e d in that the muffler substantially occupies said space having the substantial shape of a triangle in cross section.

14. Machine according to claim 12 or 13, c h a r a c t e r i s e d in that the contour of the muffler in said cross section has a point of balance (centre of gravity) having a position at a level which is lower than the level of the axis of rotation of the crankshaft, when the machine is in an upright position.

15. Machine according to any of claims 12-14, c h a r a c t e r i s e d in that at least 60 %, and preferably at least 80 %, of a front side of the muffler faces the tool unit within a sector of a circle of 60 degrees, said sector (γ) having its centre in the centre of the tool,
an upper border line which is horizontal, and a lower border line in a downwards-rearwards direction, when the machine is in an upraised position.

16. Machine according to claim 15, c h a r a c t e r i s e d in that the sector beneath said horizontal border line corresponds to a sector angle which is not smaller than 35 degrees, preferably not smaller than 40 degrees.

17. Machine according to any of claims 15-16, c h a r a c t e r i s e d in that the front side (45) of the muffler is concave and that it is essentially parallel with the periphery of the tool within said sector.

18. Machine according to any of claims 12-17, c h a r a c t e r i s e d in that at least the main part of the upper part of a rear side (42) of the muffler faces and is essentially parallel with the inclined front side of the engine (11).

19. Machine according to claim 18, c h a r a c t e r i s e d in that a lower part of the rear side of the muffler faces and is essentially parallel with the front side of a member (43) extending in a substantially vertical direction under the crankcase.

20. Machine according to any of claims 1-19, c h a r a c t e r i s e d in that the contour of the muffler has a shape in cross section in a plane perpendicular to the axes of rotation of the tool and of the crankshaft, approximately corresponding to the contour of a pear.

21. Machine according to any of claims 1-20, c h a r a c t e r i s e d that the centre line of the cylinder forms an angle (δ) of 10-45 degrees, preferably 15-30 degrees to a line extending between and defined by the foremost point of the top part of the machine unit and the foremost point of the muffler.

22. Machine according to any of claims 12-21, c h a r a c t e r i s e d in that a rear bottom part (55) of the muffler protrudes rearwards under the crankcase.

23. Machine according to any of claims 1-22, c h a r a c t e r i s e d in that a front bottom part (60) of the fuel tank protrudes forwards under the crankcase.

24. Machine according to any of claims 1-23, c h a r a c t e r i s e d in that a front side (61) of the protruding part (60) of the fuel tank faces the rear side of the protruding muffler part (55).

25. Machine according to claim 24, c h a r a c t e r i s e d in that a heat insulation (64) is provided in a gap (63) between the lower parts of said front and rear sides of the fuel tank and muffler, respectively.

26. Machine according to any of claims 21-25, c h a r a c t e r i s e d in that the crankcase is accommodated in a space (67) above said rearward and forwards extending parts of the muffler and the fuel tank, respectively, and between said rear, forwards inclined side of the muffler and a front, rearwards inclined side of the fuel tank.

27. Machine according to any of claims 1-26, c h a r a c t e r i s e d in that said assembly (16) for supplying air and fuel to the engine are accommodated in a space (70) of the machine unit above the fuel tank and at the rear of the inclined cylinder block.

28. Machine according to any of the preceding claims, c h a r a c t e r i s e d in that a spark plug (6) of the internal combustion engine is located in the front top part of the machine unit, adjacent to the front top corner.

29. Machine according to any of the preceding claims, c h a r a c t e r i z e d in that the engine is a crankcase scavenged two-stroke engine and that additional air is supplied to the transfer channels from an air inlet (76) via at least one connecting duct (78).

Fig. 1

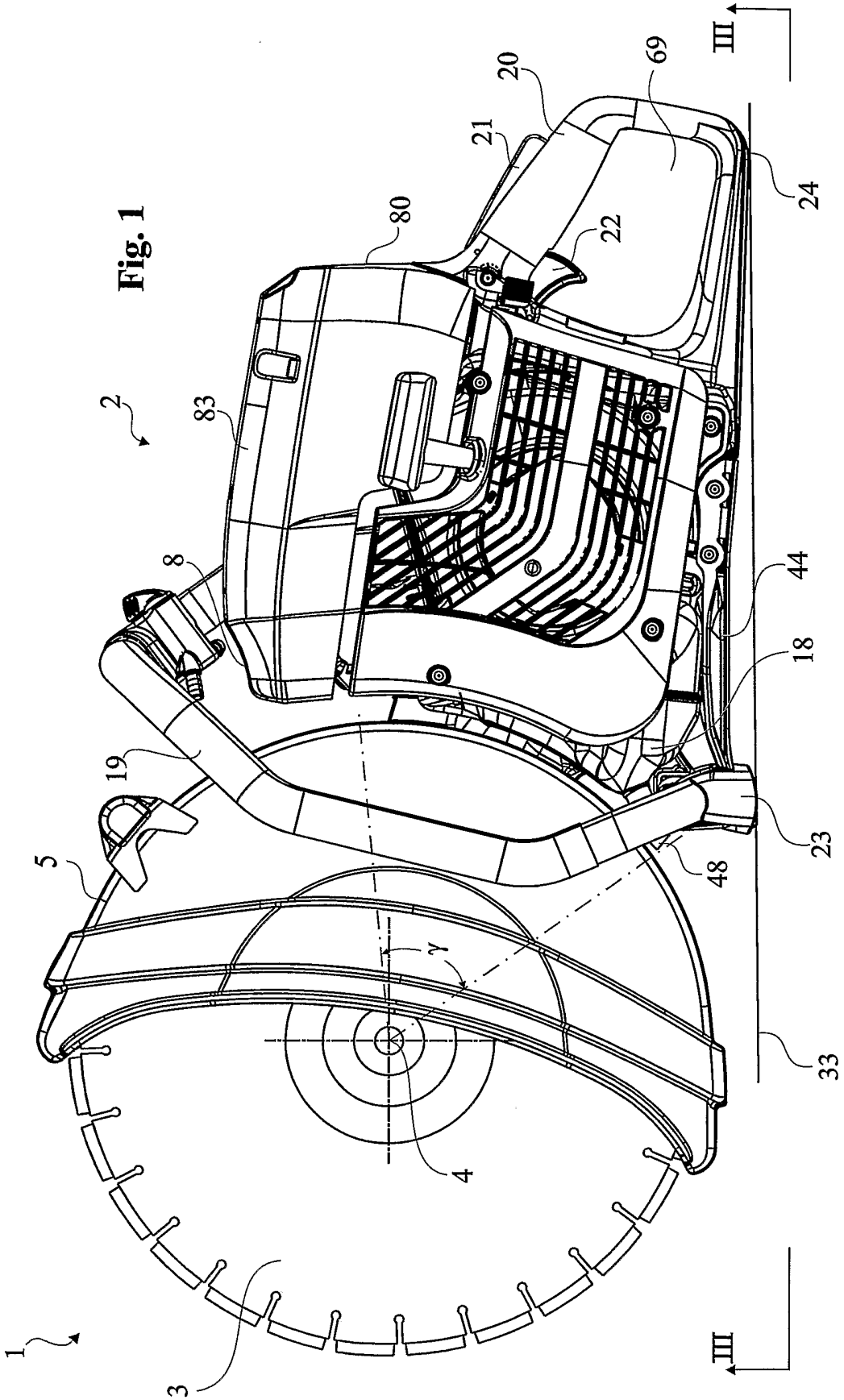

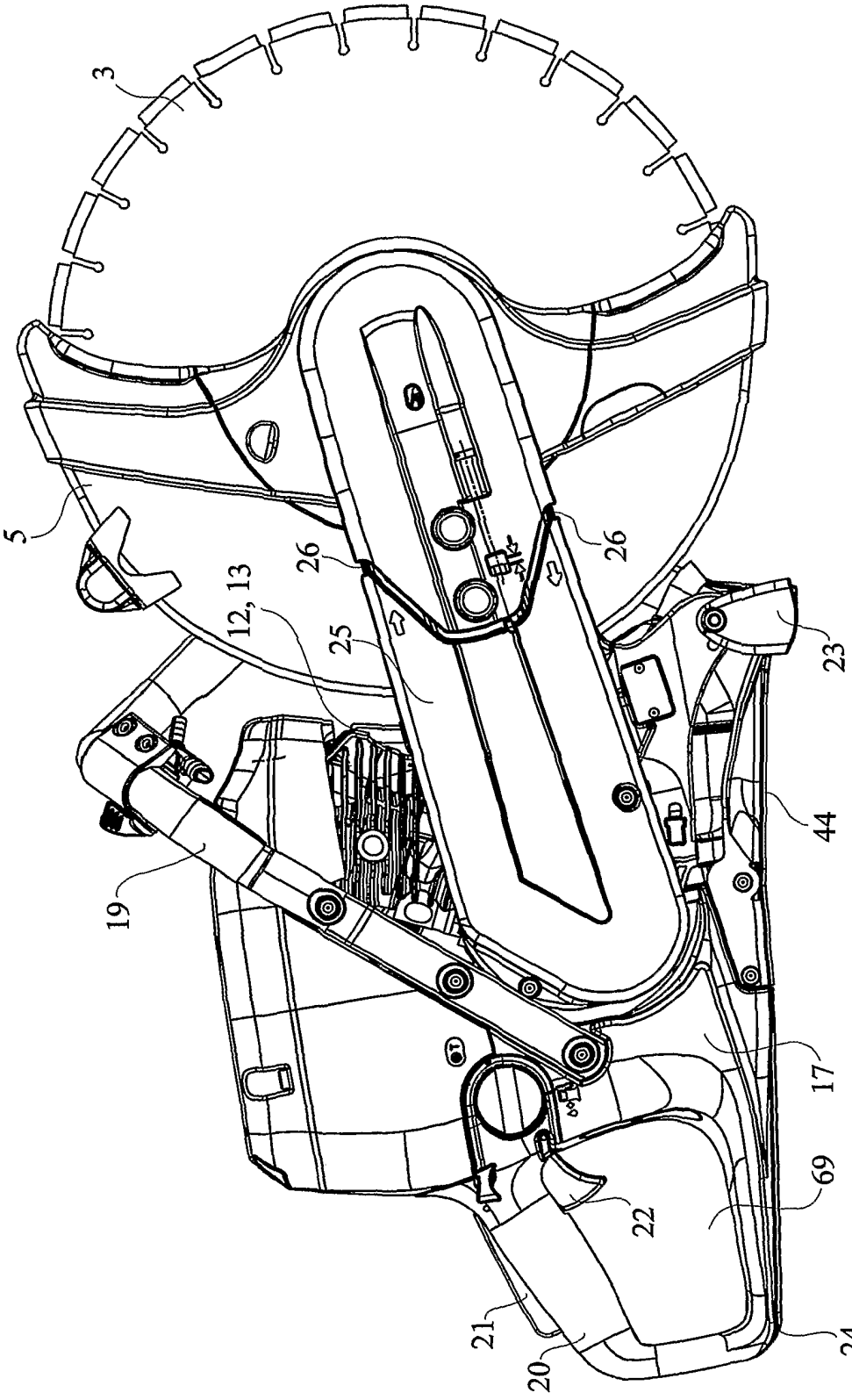

Fig. 2

Fig. 3

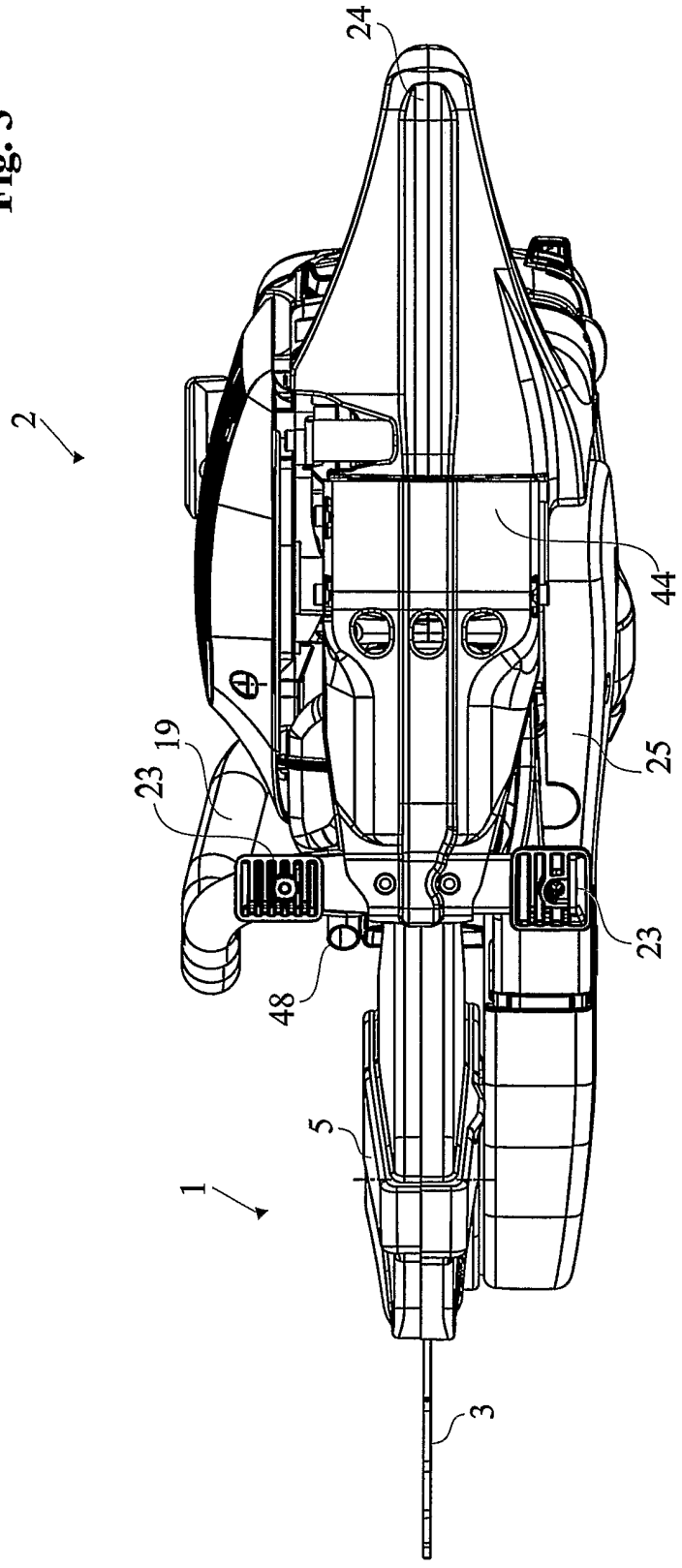

Fig. 4

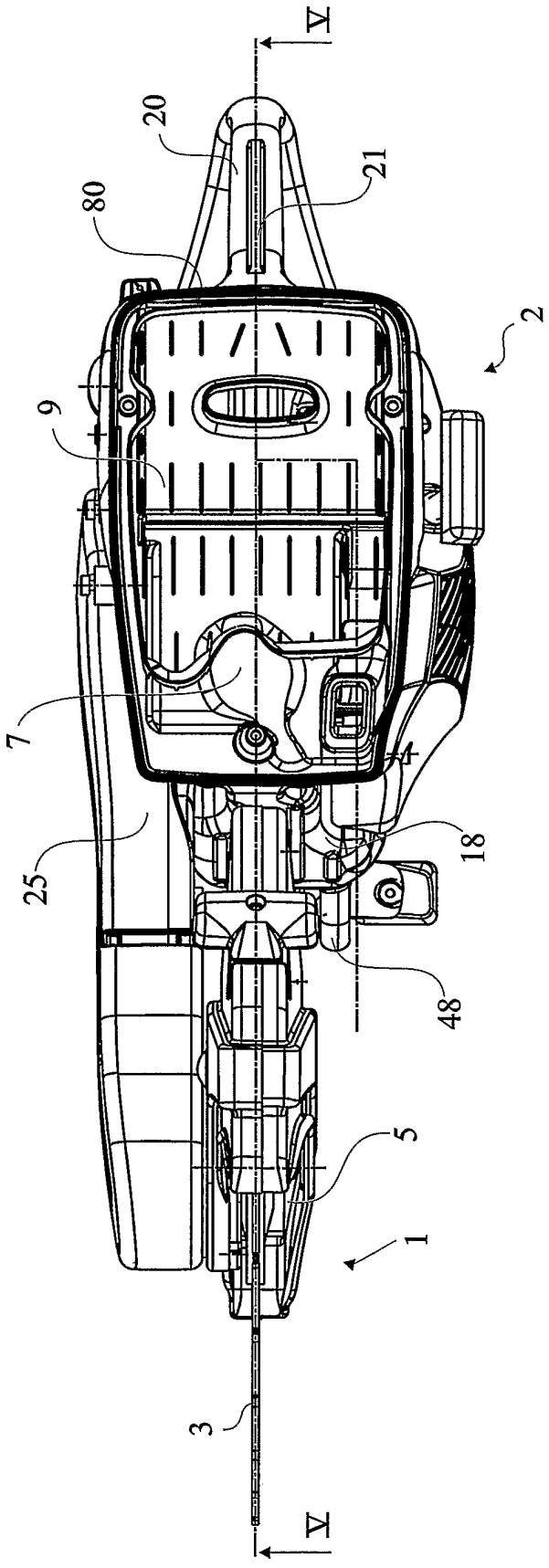

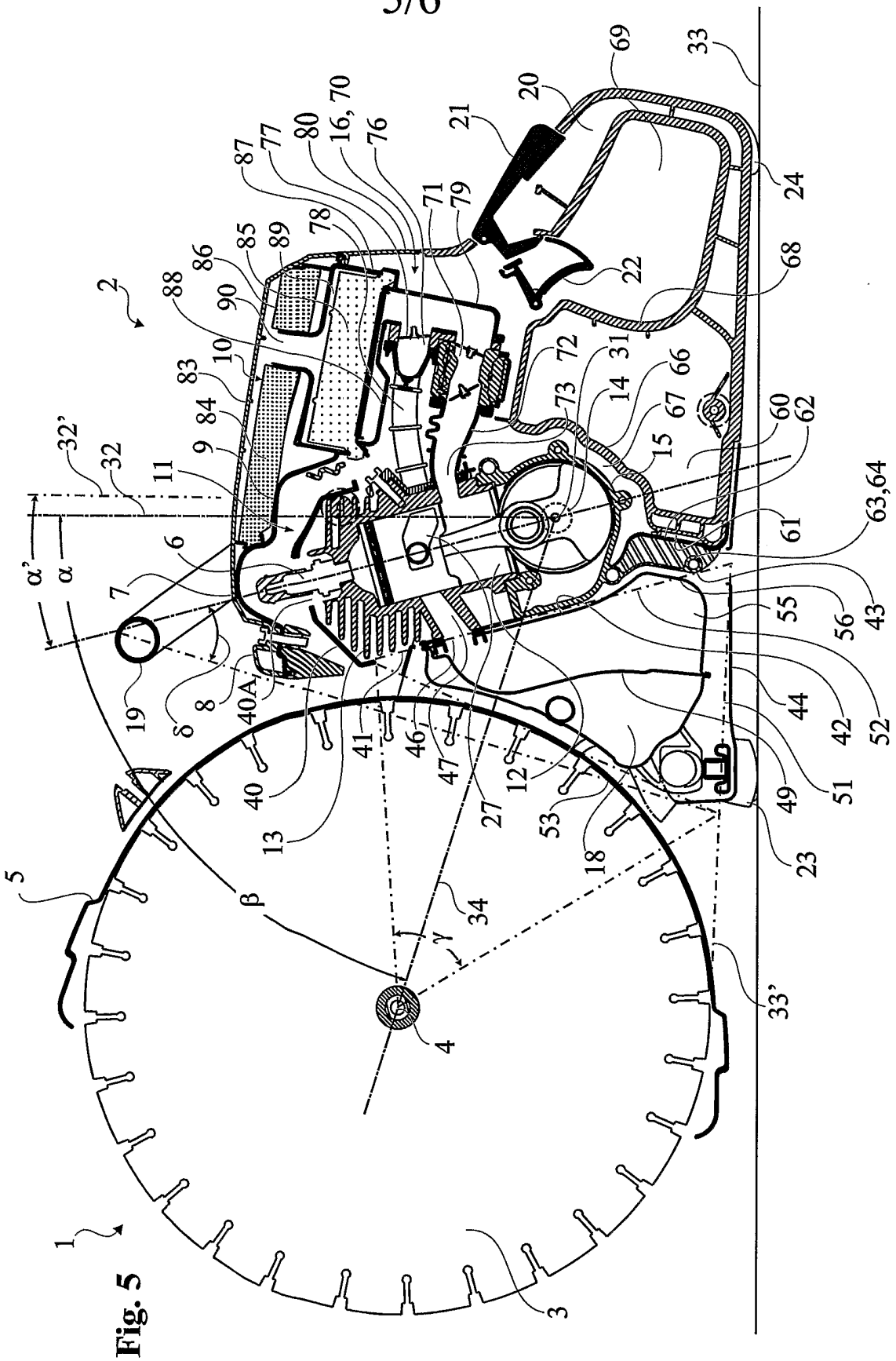
1
2
3
4
5
6
7
8
9
10
11
13
18
19
20
21
22
23
24
27
31
32
32'
33
33'
34
40
40A
41
42
43
44
46
47
49
51
52
53
55
56
60
61
62
63,64
66
67
68
69
70
71
72
73
76
77
78
79
80
83
84
85
86
87
88
89
90
α
α'
β
γ
δ

Fig. 5

Fig. 8

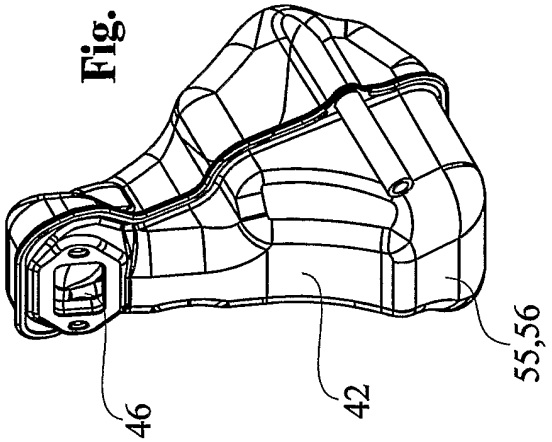

Fig. 7

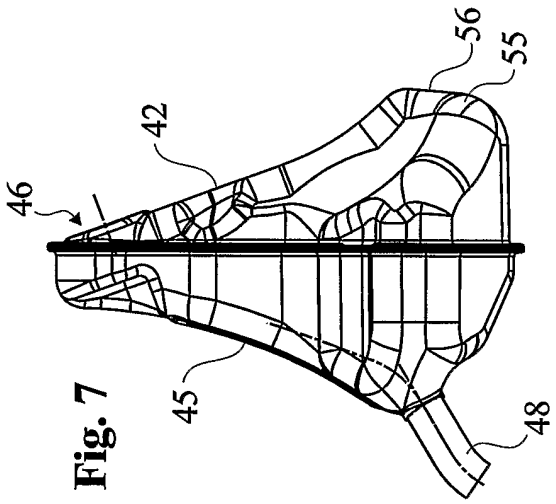

Fig. 6

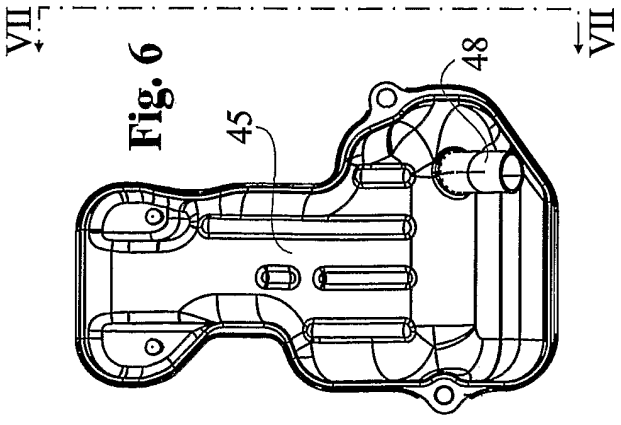

INTERNATIONAL SEARCH REPORT

International application No.
PCT/SE 2003/001923

A. CLASSIFICATION OF SUBJECT MATTER

IPC7: B23D 45/16, B28D 1/04, F02B 63/02
According to International Patent Classification (IPC) or to both national classification and IPC

B. FIELDS SEARCHED

Minimum documentation searched (classification system followed by classification symbols)

IPC7: B23D, B24B, B27B, B28D, F02B, F02M

Documentation searched other than minimum documentation to the extent that such documents are included in the fields searched

SE,DK,FI,NO classes as above

Electronic data base consulted during the international search (name of data base and, where practicable, search terms used)

EPODOC-INTERNAL, WPI DATA

C. DOCUMENTS CONSIDERED TO BE RELEVANT

Category*	Citation of document, with indication, where appropriate, of the relevant passages	Relevant to claim No.
X	US 2001003983 A1 (CIICHI IIDA ET AL), 21 June 2001 (21.06.2001), figure 1, paragraphs [20]-[24] --	1-11,23, 27-29
X	US 5317997 A (EIJI TOMITAKU), 7 June 1994 (07.06.1994), column 1, line 5 - line 7; column 2, line 25 - column 4, line 21, figure 2 --	1-8,20,21, 23,27-29
X	US 4475487 A (TAKASHI FUKUOKA ET AL), 9 October 1984 (09.10.1984), column 2, line 37 - line 56, figure 1 --	1-8,28,29

[X] Further documents are listed in the continuation of Box C. [X] See patent family annex.

* Special categories of cited documents:
"A" document defining the general state of the art which is not considered to be of particular relevance
"E" earlier application or patent but published on or after the international filing date
"L" document which may throw doubts on priority claim(s) or which is cited to establish the publication date of another citation or other special reason (as specified)
"O" document referring to an oral disclosure, use, exhibition or other means
"P" document published prior to the international filing date but later than the priority date claimed
"T" later document published after the international filing date or priority date and not in conflict with the application but cited to understand the principle or theory underlying the invention
"X" document of particular relevance: the claimed invention cannot be considered novel or cannot be considered to involve an inventive step when the document is taken alone
"Y" document of particular relevance: the claimed invention cannot be considered to involve an inventive step when the document is combined with one or more other such documents, such combination being obvious to a person skilled in the art
"&" document member of the same patent family

Date of the actual completion of the international search	Date of mailing of the international search report
22 July 2004	23 -07- 2004
Name and mailing address of the ISA/ Swedish Patent Office Box 5055, S-102 42 STOCKHOLM Facsimile No. +46 8 666 02 86	Authorized officer Anders Brinkman/ELY Telephone No. +46 8 782 25 00

INTERNATIONAL SEARCH REPORT

International application No.
PCT/SE 2003/001923

C (Continuation). DOCUMENTS CONSIDERED TO BE RELEVANT

Category*	Citation of document, with indication, where appropriate, of the relevant passages	Relevant to claim No.
A	US 5438965 A (TORE ARONSSON ET AL), 8 August 1995 (08.08.1995), column 1, line 7 - line 14; column 4, line 15 - line 28, figures 1,3,4, cited in the application -- --------	1

INTERNATIONAL SEARCH REPORT

Information on patent family members

International application No.
PCT/SE 2003/001923

US	2001003983	A1	21/06/2001	JP	2001162437	A	19/06/2001
				US	6546631	B	15/04/2003
US	5317997	A	07/06/1994	JP	3178922	B	25/06/2001
				JP	6173797	A	21/06/1994
US	4475487	A	09/10/1984	AU	539261	B	20/09/1984
				AU	9101482	A	09/06/1983
				CA	1190817	A	23/07/1985
				DE	3243702	A,C	09/06/1983
				FR	2517748	A,B	10/06/1983
				GB	2112856	A,B	27/07/1983
				IT	1189432	B	04/02/1988
				IT	8236186	V	03/12/1982
				IT	8249617	D	00/00/0000
				JP	1020509	B	17/04/1989
				JP	1536263	C	21/12/1989
				JP	58083317	A	19/05/1983
				JP	58084363	U	08/06/1983
				SE	443192	B,C	17/02/1986
				SE	8206916	A	05/06/1983
US	5438965	A	08/08/1995	EP	0686115	A	13/12/1995
				GB	2274408	A,B	27/07/1994
				GB	2285757	A,B	26/07/1995
				GB	9400583	D	00/00/0000
				GB	9502976	D	00/00/0000
				SE	470567	B,C	29/08/1994
				SE	9300178	A	22/07/1994
				US	5722866	A	03/03/1998
				WO	9420362	A	15/09/1994