United States Patent

Krautkremer

[15] **3,683,841**

[45] **Aug. 15, 1972**

[54] **LIFT AND SWINGING DEVICE FOR A STEERABLE PROPELLER**

[72] Inventor: **Franz Krautkremer,** Im Muhren, Germany

[73] Assignee: **Schattel of America Inc.,** Miami, Fla.

[22] Filed: **June 8, 1970**

[21] Appl. No.: **44,368**

[30] **Foreign Application Priority Data**

May 15, 1970 Germany.....P 20 23 949.0

[52] **U.S. Cl.**.....**115/41 R**

[51] **Int. Cl.**.....**B63h 5/12**

[58] **Field of Search**.....115/35, 41, 41 HT, 34

[56] **References Cited**

UNITED STATES PATENTS

2,902,967	9/1959	Wanzer	115/41
3,199,483	8/1965	Ellzey	115/41 X
3,145,003	8/1964	Hart	115/41 X
3,404,656	10/1968	Chamberlain	115/41
3,421,723	1/1969	Holt	115/41 X

FOREIGN PATENTS OR APPLICATIONS

1,260,335	2/1968	Germany	115/41
1,141,557	12/1962	Germany	115/41
309,789	7/1933	Italy	115/41

Primary Examiner—Milton Buchler
Assistant Examiner—Carl A. Rutledge
Attorney—Woodhams, Blanchard & Flynn

[57] **ABSTRACT**

A steerable propeller for a watercraft having a guide secured to the watercraft and a carriage slidably secured to the guide and supported for vertical movement. A housing is pivotally secured to the carriage and is pivotable between first and second positions. The housing includes means having a propeller rotatably secured thereto which extends below the waterline when the housing is in the first position. First drive means are provided for raising and lowering the carriage in the guide to effect a depth adjustment of the propeller. Second drive means are provided for moving the housing at least toward the second position. Cooperating means are adapted to cooperate with the first and second drive means to permit a movement of the housing, including the means having the propeller, to the second position, the second position being spaced at least 180° from the first position.

8 Claims, 8 Drawing Figures

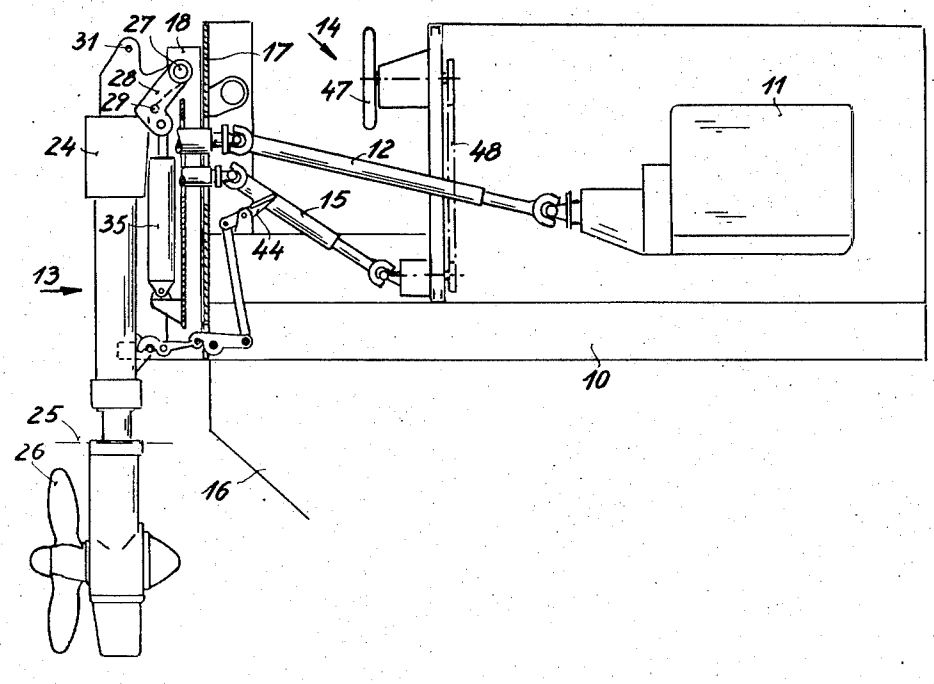

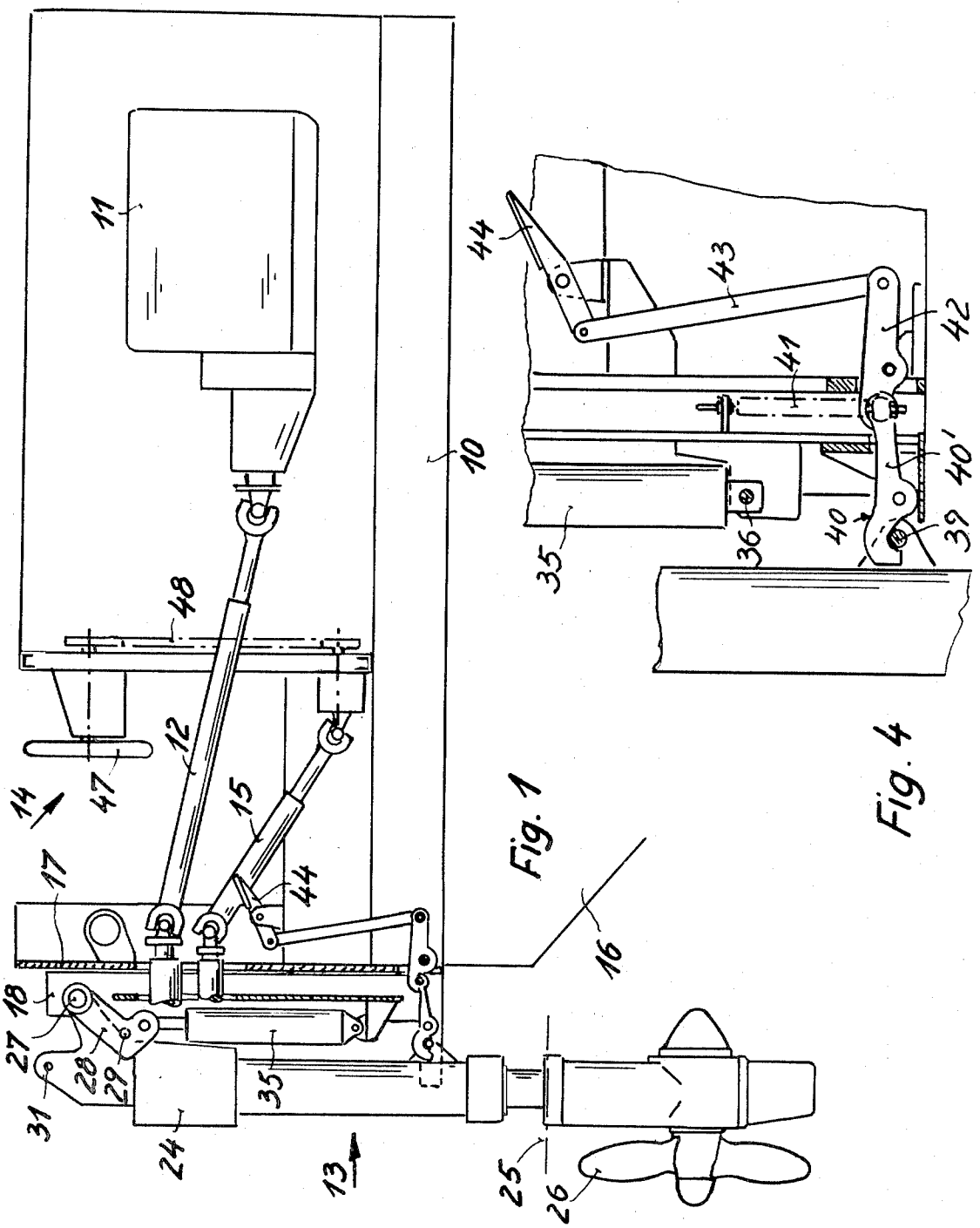

Fig. 1

Fig. 4

INVENTOR
FRANZ KRAUTKREMER

BY
Woodhams, Blanchard & Flynn
ATTORNEYS

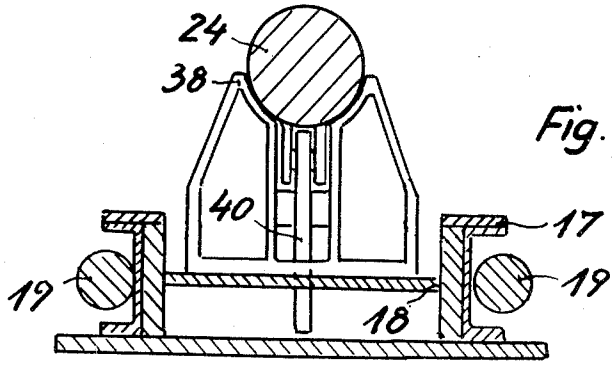

Fig. 3

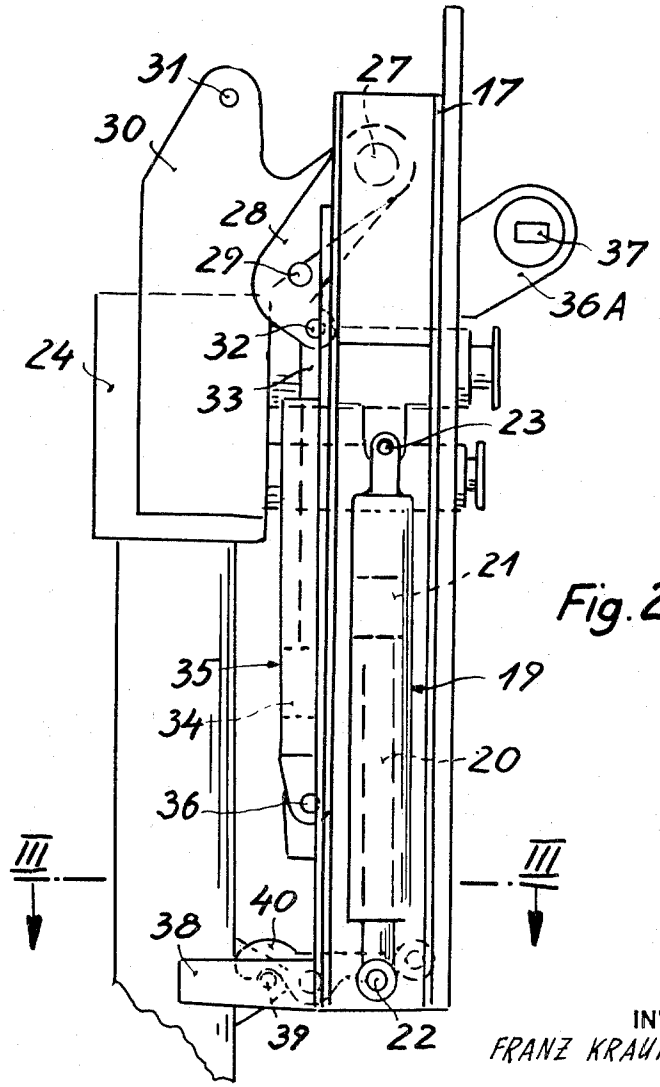

Fig. 2

INVENTOR
FRANZ KRAUTKREMER

BY
Woodhams, Blanchard & Flynn
ATTORNEYS

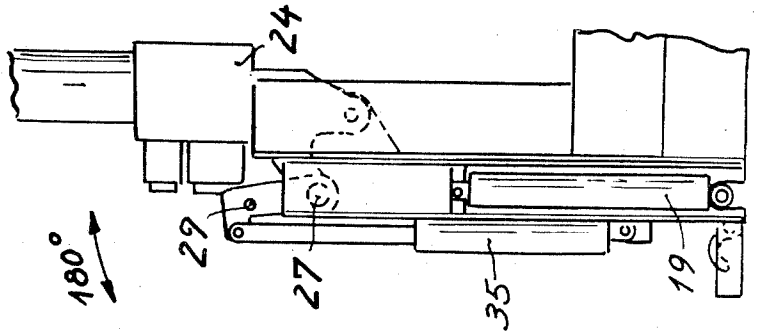

Fig. 8

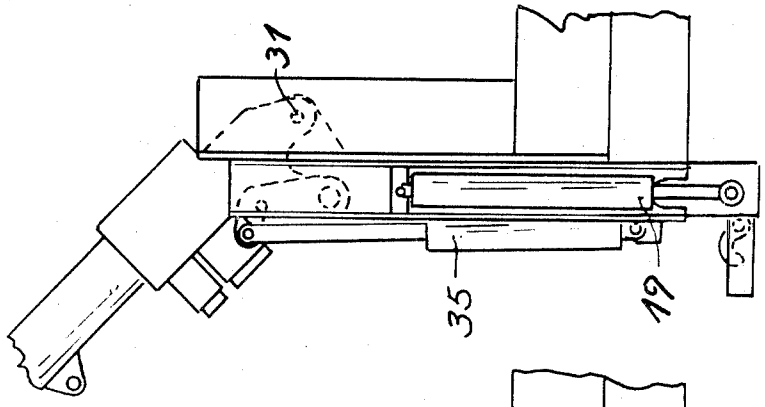

Fig. 7

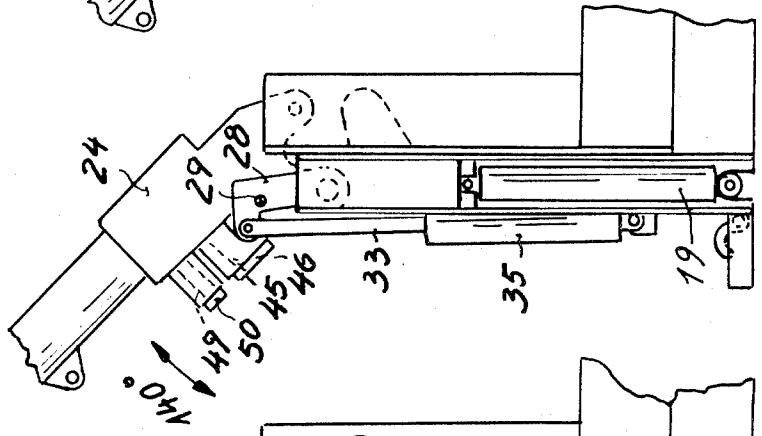

Fig. 6

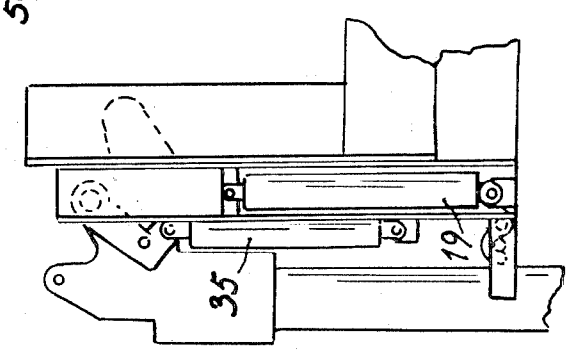

Fig. 5

INVENTOR
FRANZ KRAUTKREMER

BY Woodhams, Blanchard & Flynn
ATTORNEYS

LIFT AND SWINGING DEVICE FOR A STEERABLE PROPELLER

The invention relates to a lift and swinging device for a steerable propeller on a watercraft in which a housing which extends underneath the waterline and contains drive transfer elements carries a propeller which, for the purpose of steering, is rotatable about an axis of rotation which is vertical in manual operating position. Said housing is adjustable for depth along said axis and the housing can be swung about an approximately horizontal axis out of the water.

A lift and swinging device of the above-described type is already known in which the propeller can be swung out of the water at approximately only 60° (German Pat. No. 1 260 335). This device has the disadvantage that the assembly containing the steerable propeller, which assembly consists for example of a frame, the motor, the power transfer mechanism, the control device and the steerable propeller, can be stored and transported only with difficulty because the steerable propeller extends both in the normal condition and in the swung-out condition under the bottom edge of the frame or if this should not be the case in the swung-out condition projects out to the back. Both conditions interfere with the storing and the loading of the assembly.

The basic purpose of the invention is to come up with the possibility to better load and store an assembly of the above-described type.

The invention is based on the concept that from this standpoint it is most advantageous if the propeller can be swung out upwardly at 180° because then the steerable propeller does not extend downwardly over the frame and the assembly requires the smallest storing area. The more narrow purpose relates therefore to a lift and swinging device which permits this swinging angle to be obtained in a highly advantageous manner in which the swinging device can also be used for other purposes. A further purpose is to enable the steerable propeller to be used for vehicles with changing draft, that is, that it must have a draft adjusting device.

To attain the basic purpose, the invention provides that the swinging of the assembly out of the water is divided into two partial movements. The one partial movement is driven by a drive mechanism which on one side engages a depth adjustable carriage and on the other side engages the housing to be swung out. The other partial movement is effected by another drive mechanism for the depth adjustment, which drive mechanism engages on one side the depth adjustable carriage and on the other side engages the frame.

An operationally very advantageous embodiment of the invention is obtained when the housing is swingable around a shaft supported in the depth adjustable frame and is lockable movably in the frame after the first partial movement. It is particularly advantageous when the housing rests so to speak loosely on the drive element of the first partial movement, for example a piston rod or an element connected therewith, so that it can depart from this rest position during the second partial movement without requiring a special handling herefor.

A simple unit is obtained if the drive mechanisms are conventional hydraulic or pneumatic lift cylinders.

In order for the steerable propeller to be securely supported in operating position, but yet be released easily for the swinging-out movement, the invention is advantageously further constructed in such a manner that the housing is held in operating position by an arbitrarily releasable lock lever.

The operational safety of the unit is furthermore promoted in such a manner that the lock lever is resiliently maintained in engagement, but automatically releasable, in order that the steerable propeller can yield when it touches the bottom.

A further advantageous characteristic of the invention is that the drive transfer elements can be separated from the propeller drive and the control drive by couplings.

Further advantages and characteristics of the invention are disclosed in the following description.

The invention is discussed in connection with FIGS. 1 to 8.

FIG. 1 is a schematic side view of one example for the assembly according to the invention.

FIG. 2 illustrates as a detail in an enlarged scale the housing of a steerable propeller with a drive according to the invention.

FIG. 3 is a schematic cross-sectional view along the line III—III of FIG. 2.

FIG. 4 illustrates as a detail one example for a lock lever according to the invention.

FIGS. 5 to 8 illustrate different steps of the swing-out process.

FIG. 1 illustrates as an example for the invention an assembly which contains a frame **10**, a motor **11**, an output shaft **12**, a steerable propeller **13**, a steering unit **14** and a control shaft **15** and which can be mounted onto a boat **16** to drive and control same.

Steerable propellers are known and therefore need not be described. A vertical guide **17** is arranged at one end on the frame **10**, in which guide a carriage **18** is supported for both upward and downward movement. One or two lift cylinders **19** are provided for the drive of the carriage **18**. A piston **21** provided with a piston rod **20** is guided in a conventional manner in said lift cylinders. The piston rod is on one side pivotally connected to the carriage by a pin **22** and the cylinder is pivotally connected to the frame or the guide by a pin **23**. The housing **24** which contains the drive elements (not illustrated) for the propeller **26** which extend below the waterline **25**, is swingably suspended in the carriage **18** by means of a substantially horizontally positioned shaft **27**. Two levers **28** are supported laterally of the housing **24** on the same shaft **27**, which levers are connected by a bolt **29** or the like. Thus, when the housing **24** is in operating position it rests on the bolt **29**. A flange or a pair of flanges **30** is arranged on the upper part of the housing **24**, which flange or pair of flanges is provided with an opening **31** for a bolt. A piston rod **33** each is pivotally connected to the free end of the levers **28** by means of pins **32**, said piston rod carrying in a conventional manner at its lower end a piston **34** which is guided in a lift cylinder **35**. The lift cylinder is pivotally connected to the carriage by a pin **36**. The housing **24** is thus supported on the piston **34** in the lift cylinder **35**. The levers **28** or the bolts **29** can be supported additionally on the carriage **18** during the operating position. An arm **36A** is secured to the

frame, said arm having a link guide **37** or the like. When the housing is swung upwardly at 180°, the opening **31** for the bolt and the link guide fit together. The supply lines for the lift cylinders and the elements for their supply are known and are therefore not illustrated.

When in operating position the housing **24** of the steerable propeller is positioned in a receiving means **38**. The housing is, in the zone of said receiving means, provided with a transversely positioned bolt **39** which can be engaged by a lock lever **40**. The lock lever is supported in the carriage and is loaded by a spring **41** in the direction of engagement with the bolt. The lock lever has two arms. The free arm **40'** is engaged by a two-arm lever **42** which is supported in the frame. A rod **43** which can be moved by means of a pedal **44** is hinged to the free end of the two-arm lever.

The steerable propeller is driven by the motor **11** through the output shaft **12**. A releasable coupling **46** is provided between the shaft and the drive shaft **45** leading into the housing **24**, one half of said coupling being schematically illustrated in form of an example in FIG. **6**. The swinging of the propeller which is required for steering the boat is driven for example by a steering wheel **47**, the movement of which is transferred through a chain drive **48** and the control shaft to the corresponding drive elements in the housing which are known and therefore not illustrated. A releasable coupling **50** is provided between the control shaft and the input shaft **49** in the housing, one half of said coupling being schematically illustrated in FIG. **6**. This coupling can be a conventional single-tooth coupling in order not to interfere with the relative position between steering wheel and steerable propeller during the swinging out of the water.

In order for the propeller always to have an optimum water depth at different drafts of the boat, the steerable propeller can be adjusted downwardly by means of the carriage which can be driven by the lift cylinder **19**.

When the steerable propeller touches the bottom while it is propelling the boat, the lock lever **40** can release against the pressure of the spring **41** and the steerable propeller can swing rearwardly.

The lift and swinging device operates as follows:

FIG. **5** schematically illustrates the steerable propeller in operating position. For swinging same out of the water, the lock lever **40** is first disconnected from the steerable propeller by operating the pedal **44**. The lift cylinders **35** are thereafter fed by pressure means, air or oil or the like, and the piston pushes the pair of levers **28**, the bolt **29** and the housing **24** upwardly through the piston rod **33** until the housing has formed approximately an angle of 140° starting from the operating position (FIG. **6**). The couplings **46**, **50** are thereby released automatically. The lift cylinders **19** are thereafter fed by pressure means which move the carriage **18** downwardly until the opening **31** covers the link guide **37**. Both are locked through a bolt or the like (FIG. **7**). An automatic catch or other device can also be provided for the locking. It is important that the locking permit a traverse movement. The carriage **18** is thereafter lifted again by the lift cylinders **19** (FIG. **8**). The housing performs thereby a further swinging movement around the shaft **27** whereby the housing **24** lifts off from the bolt **29**. The housing carrying the propeller has thus in the final position performed a swinging movement of 180°.

The embodiments of the invention in which an exclusive property or privilege is claimed are defined as follows:

1. A steerable propeller for a watercraft, comprising:

a guide secured to said watercraft;

a carriage slidably secured to said guide and supported for vertical movement;

a housing pivotally secured to said carriage and pivotable about means defining a horizontal axis between first and second positions, said housing including means having a propeller rotatably secured thereto extending below the waterline when said housing is in said first position;

first drive means for raising and lowering said carriage in said guide to effect a depth adjustment of said propeller;

second drive means for moving said housing about said horizontal axis between said first position and an intermediate position spaced from said second position; and

cooperating means adapted to cooperate with said first drive means to permit a movement of said housing, including the means having the propeller, between said intermediate position and said second position, said second position being spaced at least 180° from said first position.

2. A steerable propeller according to claim **1**, including means for rotatably driving said propeller and releasable coupling means for coupling said driving means to said propeller when said housing is in said first position, said coupling means being automatically released upon a movement of said housing toward said second position.

3. In a lift and swinging device for a steerable propeller steerable by a steering control on a watercraft having a housing which extends beneath the waterline and contains drive transfer elements and carries a propeller which, for the purpose of steering, is rotatable about an axis of rotation which is vertical in operating position and depth adjustable carriage means for adjusting the depth of said propeller in direction of said axis and support means for supporting the housing for movement about an approximately horizontal axis out of the water, wherein the improvement comprises drive means for swinging said propeller out of the water, said swinging movement being divided into two partial and separate movements, the one of which being driven by a first drive mechanism which on one side is connected to the depth adjustable carriage means and on the other side is connected to the housing, the other partial movement being driven by a second drive mechanism for adjusting said depth adjustable carriage means, said other drive mechanism being connected on one side to the depth adjustable carriage means and on the other side to the frame.

4. Device according to claim **3**, wherein the housing is swingable around a shaft supported on the depth adjustable carriage and includes means for releasably locking said housing to the frame after the first partial movement.

5. Device according to claim **3**, wherein the drive mechanisms are conventional hydraulic or pneumatic lift cylinders.

6. Device according to claim 3, wherein the housing is held in operating position by selectively releasable catch means.

7. Device according to claim 6, wherein the selectively releasable catch means is maintained in resilient engagement but is automatically releasable.

8. Device according to claim 3, wherein the drive transfer elements include releasable coupling means for releasably coupling the propeller drive and steering control drive to the propeller and the steering control, respectively.

* * * * *