106-74 AU 113 EX
XR 2,240,007
CROSS REFERENCE
EXAMINE
64

April 29, 1941. L. E. POWER 2,240,007

ELECTRICAL ARC BARRIER

Filed July 29, 1939 3 Sheets-Sheet 1

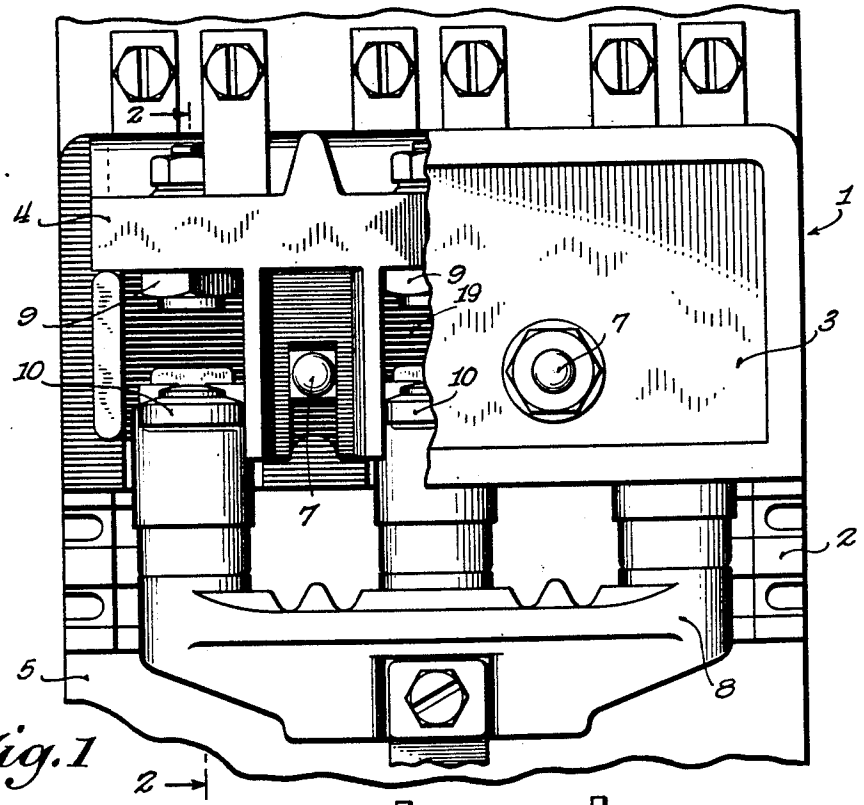

Fig. 1

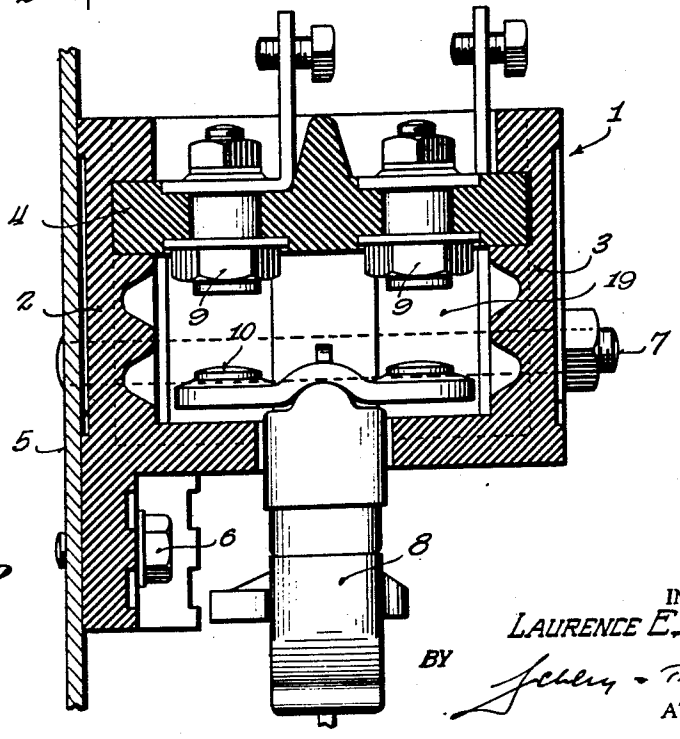

Fig. 2

INVENTOR
LAURENCE E. POWER
BY Jelley & Trask
ATTORNEYS.

April 29, 1941. L. E. POWER 2,240,007

ELECTRICAL ARC BARRIER

Filed July 29, 1939 3 Sheets-Sheet 2

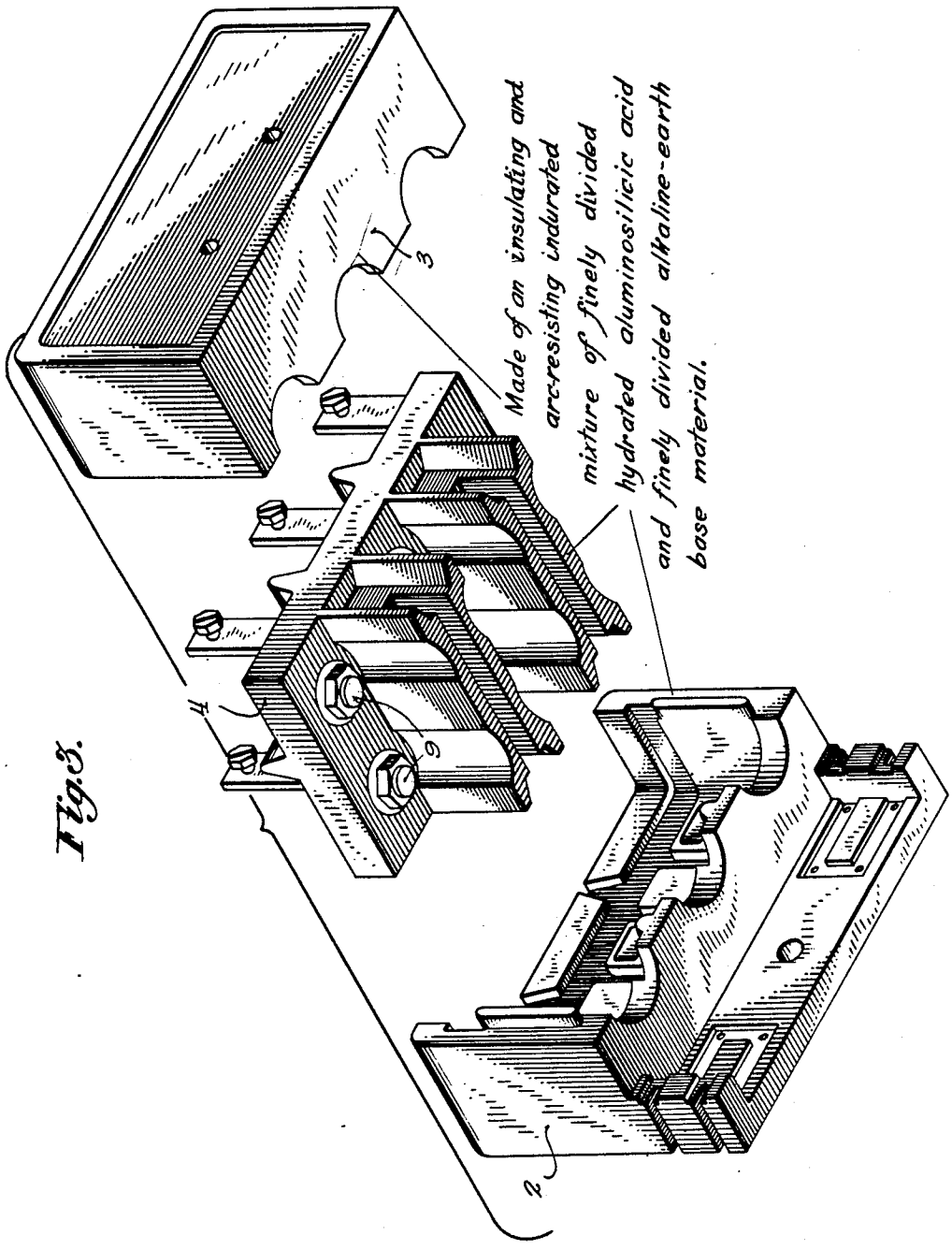

Fig. 3.

INVENTOR.
LAURENCE E. POWER
BY
Jebley & Trask
ATTORNEYS.

April 29, 1941. L. E. POWER 2,240,007

ELECTRICAL ARC BARRIER

Filed July 29, 1939 3 Sheets-Sheet 3

Fig. 4

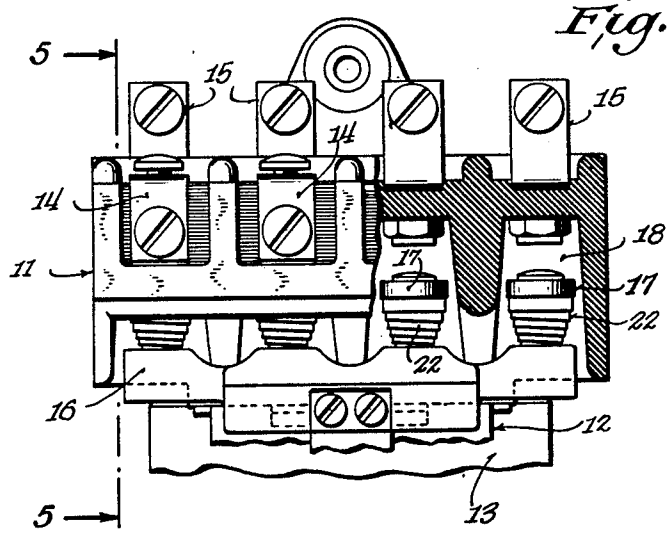

Fig. 5

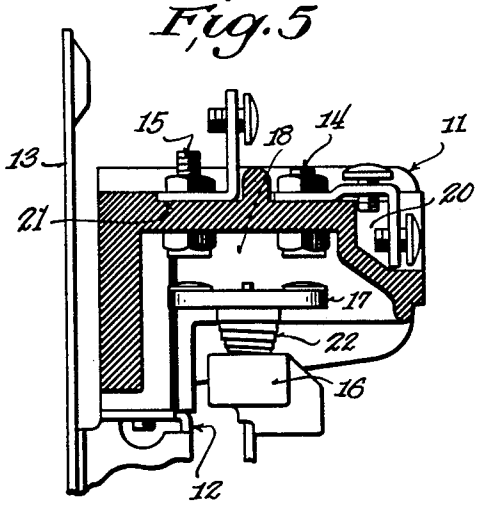

Fig. 6

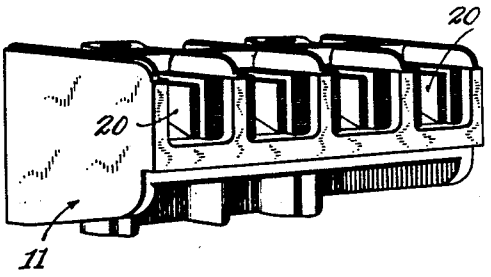

INVENTOR.
LAURENCE E. POWER
BY Fealey & Treash
ATTORNEYS.

line or magnesia
+
clay, shale or slate
+
asbestos

Patented Apr. 29, 1941 2,240,007

UNITED STATES PATENT OFFICE

2,240,007

ELECTRICAL ARC BARRIER

Laurence E. Power, Milwaukee, Wis., assignor to Rostone Corporation, La Fayette, Ind., a corporation of Indiana

Application July 29, 1939, Serial No. 287,351

10 Claims. (Cl. 200—168)

This invention relates in general to a material for an electrical arc barrier and in particular to an electrical arc barrier in the form of a chamber or hood.

It is an object of this invention to provide an electrical arc barrier of such material that it may be molded into an arc hood or an arc chamber.

It is a further object to provide for an arc chamber that has high dielectric strength, high thermal conductivity and that does not feed an electrical arc.

It is a still further and particular object of this invention to provide for an arc chamber that is highly resistant to the destructive action of an electrical arc and which arc chamber may be made to conform to the required shape with accuracy.

This invention is a discovery that the material of the type known as "Rostone," which material is used for the exterior walls of houses or other like structures, has particular properties that make this material especially useful as an arc barrier in the form of an arc chamber or arc hood.

My invention is the discovery that the material "Rostone" has high dielectric strength, does not feed an electrical arc, exhibits a marked resistance to the destructive action of an electrical arc, and may be molded or formed to a required shape with a high degree of accuracy.

This material "Rostone" can further be adapted for use as an electrical arc barrier in that it can be made moisture resistant by proper impregnating treatment.

Heretofore, difficulty had been experienced in the production of a satisfactory electrical arc barrier in the form of an arc chamber, which was accurate in the various required dimensions.

This problem become accentuated in arc chambers where accurate spacing of contacts and terminals was required and in arc chambers where the parts of the chamber had to fit together with only a small tolerance of dimensions allowed.

My invention provides for the accomplishment of the above named objects, and in the accompanying drawings I have shown two forms of arc hood structures in which this material "Rostone" has proven itself particularly useful.

Figures 1, 2 and 3 are drawings of a structure composed of three sections and which structure forms an enclosure for the switch contacts and also provides a mounting for the switch contacts and necessary terminals.

Figures 4, 5 and 6 are drawings of another type of structure which is a single molding and which structure forms a chamber for the switch contacts and also provides a mounting for the switch contacts and necessary terminals.

Figure 1 is a front elevation of the arc hood assembly showing by means of a partial section the stationary and movable contacts in their normally open position.

Figure 2 is a side elevation of the arc hood assembly showing by means of a partial section along the line 2—2 in Figure 1 the interfitting of the hood structure and the stationary and movable contacts in their normally open position.

Figure 3 is an exploded perspective view of the arc hood showing the three component parts of the arc hood and the stationary contact assemblies.

Figure 4 is a front elevation of the other type of arc hood assembly and showing by means of a partial section the stationary and movable contacts in the normally open position.

Figure 5 is a side elevation of the arc hood of Figure 4 showing by means of a partial section along the line 5—5 in Figure 4 the stationary and movable contacts in their normally open position.

Figure 6 is a perspective view of the arc hood without terminals, contacts or any mounting parts showing the character of recesses and projections for the mounting of such parts.

The arc hood assembly 1 shown in Figures 1, 2 and 3 consists of a back section 2 that is mounted to the mounting plate 5 by means of mounting screw 6 and hood locking bolts 7—7, a top section 4 having mounted therein stationary contact assemblies 9, an actuator 8, and movable contact assemblies 10, and a front section 3. The three sections of the arc hood are held together by the interfitting of the three parts as shown in the drawings and by the hood locking bolts 7—7.

The chamber designated as 19 for each set of stationary and movable contacts, 9 and 10 respectively, is formed by the interior walls of sections 2, 3 and 4 and as shown are in accurate relationship to the position of the said movable and stationary contacts.

This type of arc hood assembly may be used on switches for multi-phase motors of the higher horsepowers ranging from the neghborhood of fifteen horsepower on upwards and arcs of high intensity may occur in the individual chambers on the operation of the switch contacts.

This type of arc hood structure requires ac-

curate fit of the back, front and top sections in order that the sections may be quickly and easily assembled. A further and important advantage results from a good fit of the engaging surfaces of the parts in that the confined arc or the gas of the confined arc cannot easily escape between such engaging surfaces.

The material "Rostone" ansers the requirement of good fit and further is highly resistant to the action of the arc which as mentioned before occurs within the chamber.

Referring to Figures 4, 5 and 6 the hood designated by numeral 11 is secured to a support bracket 12 projecting from a mounting plate 13.

The top portion of the hood has mounted therein the stationary contact and terminal assemblies 14 and 15. An actuator designated generally by the numeral 16 carries, through interposed springs 22, the movable contact assemblies 17 which are adapted to engage the stationary contacts of assemblies 14 and 15. The chamber for each set of movable and stationary contacts is designated by the numeral 18.

It is to be noted that recesses designated as 20 and 21 for the front and back contact assemblies 14 and 15 respectively, are of necessity accurately formed in that the engaging portions of the contact assemblies may at all times be in alignment.

It is also to be noted that the walls of the chamber 18 for each set of contacts are closely adjacent to the contacts and herein accuracy is again of great importance.

The arc hood as shown in Figures 4, 5 and 6 is adapted to be used for switches for industrial motors of the lower horsepowers as compared to the motors controlled by the structure shown in Figures 1, 2 and 3.

The material "Rostone" is composed of finely divided alkaline earth materials of the group including lime and magnesia; finely divided hydrated aluminosilicic acid such as clay, shale or slate; a mineral filler such as asbestos is desired; and water sufficient to complete the desired reaction during the indurating process.

The preparation of this material which is known as "Rostone" is given in U. S. Patent No. 1,852,672 issued April 5, 1932, to Harry C. Peffer et al, U. S. Patent No. 1,877,960 issued September 20, 1932, to Harry C. Peffer et al, and U. S. Patent No. 1,942,770 issued January 9, 1934, to Harry C. Peffer et al. These patents clearly disclose the procedure and technique of preparing the material which is the subject of this patent.

As pointed out in the above patents, the raw materials used in formulating this material are all obtainable in large quantities of uniform quality and at comparatively low cost. The preparation of the molding material, its formation by pressing and indurating are all simple and inexpensive operations. It is possible with this molding material to obtain far superior detail and accuracy of molded parts than heretofore obtainable from materials having equivalent arc resisting characteristics and the time of processing, particularly the indurating period, is materially shorter than with other equivalent materials.

Those experienced in the art of designing and manufacturing arc barriers and arc enclosures, as herein disclosed, will readily appreciate the value of a material that can be satisfactorily and economically used to manufacture both simple and complicated arc barrier structures of superior quality.

What I claim as my invention is:

1. An electrical insulating and arc-resisting element that exhibits marked resistance to destructive action of an electric arc including an indurated mixture of finely divided hydrated aluminosilicic acid and finely divided alkaline earth base material.

2. An electrical insulating and arc-resisting element that exhibits marked resistance to destructive action of an electric arc including an indurated mixture of finely divided hydrated aluminosilicic acid, finely divided alkaline earth base material, water and a mineral filler.

3. An electric switching device including an electrical insulating and arc-resisting element subject to contact of an electric arc wherein said insulating material is composed entirely or in part of an indurated mixture of finely divided hydrated aluminosilicic acid and finely divided alkaline earth base material.

4. An electrical arc chamber formed from an insulating and arc-resisting indurated mixture of finely divided hydrated aluminosilicic acid and finely divided alkaline earth base material.

5. An electrical arc chamber formed by the fitting together of at least two separate insulating members wherein one or more of said insulating members include as an essential part an insulating and arc-resisting indurated mixture of finely divided aluminosilicic acid and finely divided alkaline earth base material.

6. An enclosure forming a chamber for a movable and stationary switch contact, said enclosure including complementary sections, the interior faces of said sections being exposed to the arc incidental to the operation of said switch contacts, and said sections including as an essential part thereof an insulating and arc-resisting indurated mixture of finely divided hydrated aluminosilicic acid and finely divided alkaline earth base material.

7. An electric switching device to interrupt electric currents encountered in industrial electric motor control, comprising spaced stationary contacts and a complementary bridging contact member for such currents, in combination with a stationary contact-mounting means and arc enclosure having a surface which may be engaged by the arc formed on the opening of said contacts and which includes a portion lying between said stationary contacts, said contact-mounting means and arc enclosure comprising an insulating and arc-resisting indurated mixture of finely divided hydrated aluminosilicic acid and finely divided alkaline earth base material.

8. An electric switching device, comprising in combination two spaced stationary contacts, a bridging contact therefor, and an arc-enclosure and stationary-contact-mounting means for said contact structure composed essentially of an insulating and arc-resisting indurated mixture of finely divided hydrated aluminosilicic acid and finely divided alkaline earth base material.

9. An electric switching device to interrupt electric currents encountered in industrial electric control, comprising a stationary contact and a co-operating movable contact, in combination with a common means for mounting said stationary contact and for confining arcs incidental to the opening of said contacts, which means is composed essentially of an insulating and arc-resisting indurated mixture of finely divided hy-

drated aluminosilicic acid and finely divided alkaline earth base material.

10. An electric switching device adapted to safely interrupt electric currents of high intensity encountered in industrial electric control, comprising, in combination with switching contacts for establishing and interrupting such currents, a contact enclosure comprising an insulating and arc-resisting indurated mixture of finely divided hydrated aluminosilicic acid and finely divided earth base material.

LAURENCE E. POWER.

CERTIFICATE OF CORRECTION.

Patent No. 2,240,007. April 29, 1941.

LAURENCE E. POWER.

It is hereby certified that error appears in the printed specification of the above numbered patent requiring correction as follows: Page 1, first column, line 40, for the word "become" read --became--; page 2, first column, line 8, for "ansers" read --answers--; page 3, second column, line 5, claim 10, after "divided" insert --alkaline--; and that the said Letters Patent should be read with this correction therein that the same may conform to the record of the case in the Patent Office.

Signed and sealed this 27th day of May, A. D. 1941.

Henry Van Arsdale,
Acting Commissioner of Patents.

(Seal)

CERTIFICATE OF CORRECTION.

Patent No. 2,240,007. April 29, 1941.

LAURENCE E. POWER.

It is hereby certified that error appears in the printed specification of the above numbered patent requiring correction as follows: Page 1, first column, line 40, for the word "become" read --became--; page 2, first column, line 8, for "ansers" read --answers--; page 3, second column, line 5, claim 10, after "divided" insert --alkaline--; and that the said Letters Patent should be read with this correction therein that the same may conform to the record of the case in the Patent Office.

Signed and sealed this 27th day of May, A. D. 1941.

(Seal)

Henry Van Arsdale,
Acting Commissioner of Patents.