A. PARSONS.

AERIAL BOMB.

APPLICATION FILED APR. 8, 1915.

1,159,704.

Patented Nov. 9, 1915.

2 SHEETS—SHEET 1.

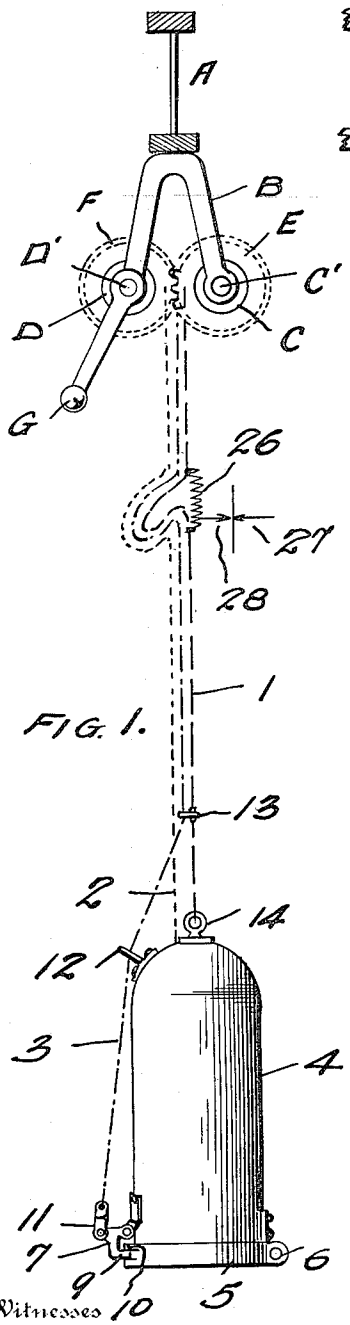

FIG. 1.

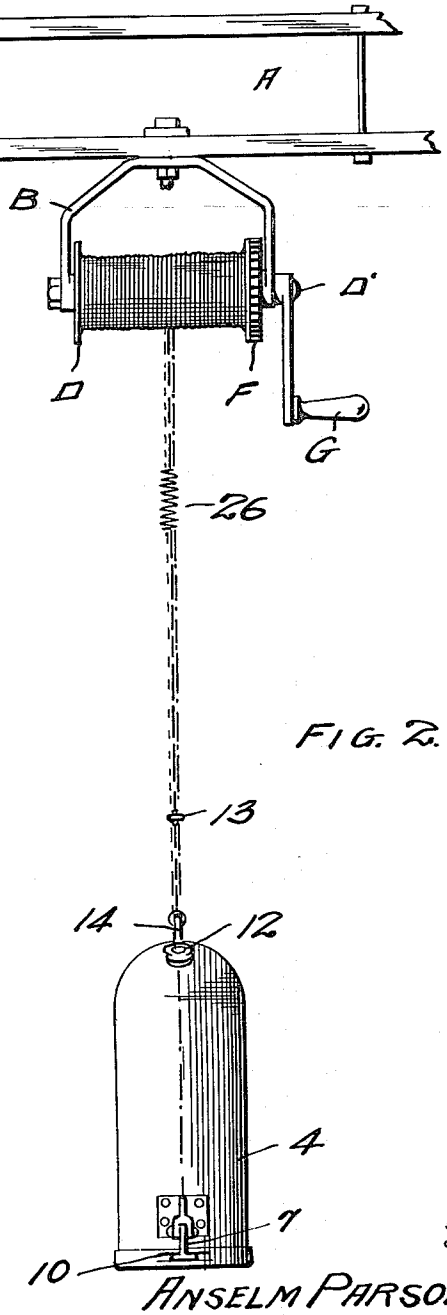

FIG. 2.

Witnesses

C. A. Davis

M. L. Newcomb

Inventor

ANSELM PARSONS

By Thomas A. Phillips

Attorney

A. PARSONS.

AERIAL BOMB.

APPLICATION FILED APR. 8, 1915.

1,159,704.

Patented Nov. 9, 1915.

2 SHEETS—SHEET 2.

FIG. 3

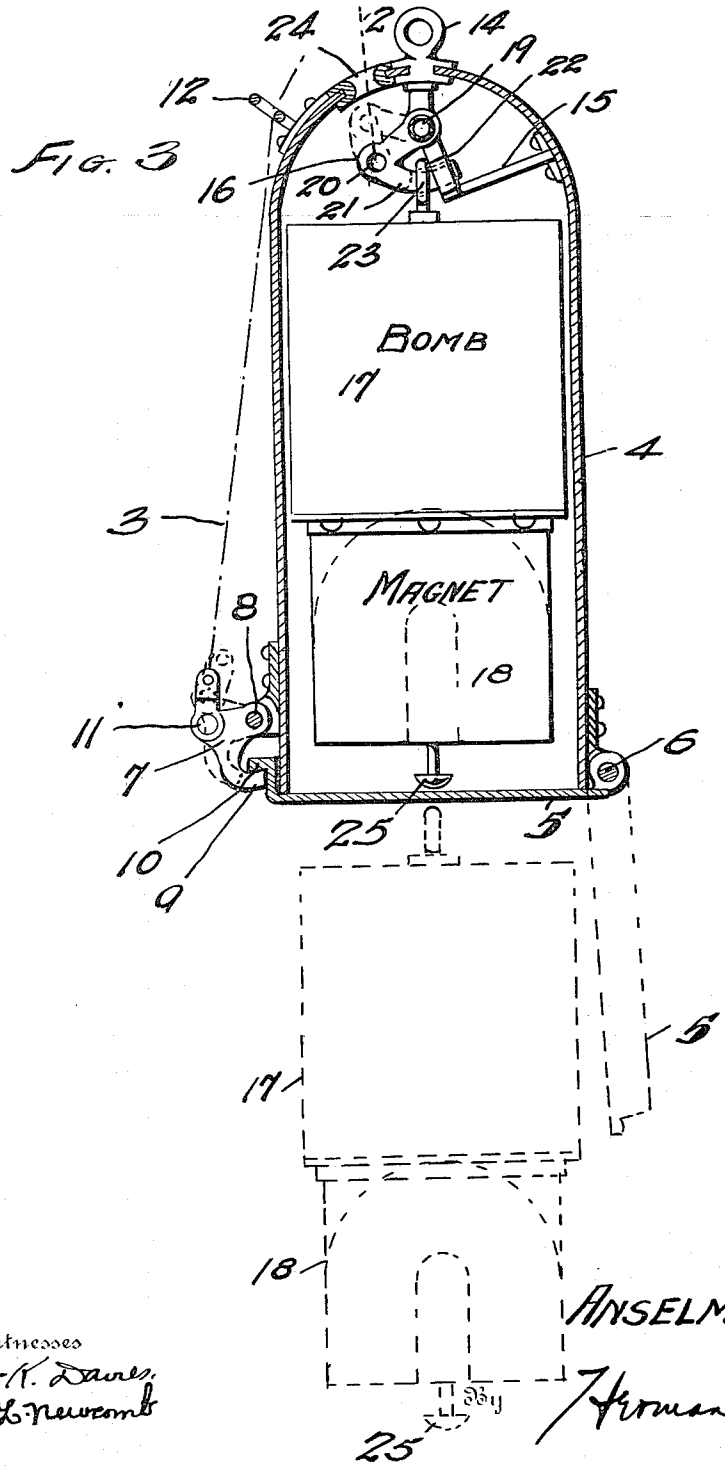

Witnesses

C. N. Davies.

M. L. Newcomb

Inventor

ANSELM PARSONS

By Herman A. Phillips

Attorney

UNITED STATES PATENT OFFICE.

ANSELM PARSONS, OF SARANAC LAKE, NEW YORK.

AERIAL BOMB.

1,159,704. Specification of Letters Patent. Patented Nov. 9, 1915.

Application filed April 8, 1915. Serial No. 19,950.

To all whom it may concern:

Be it known that I, ANSELM PARSONS, a citizen of the United States of America, residing at Saranac Lake, in the county of Franklin and State of New York, have invented certain new and useful Improvements in Aerial Bombs, of which the following is a specification.

The present invention relates to improvements in aerial bombs, and is designed especially for use in warfare to be carried by an aerial craft and to be dispensed from said craft for the particular purpose of destroying war vessels.

The primary object of the invention is the provision of such a device to be suspended from an aerial craft and which embodies as a portion thereof, a magnet which is especially adapted to be influenced by magnetic metals such as the steel of which the modern naval war vessels are constructed. Under the magnetic influence of the material of the naval war vessel, the magnet in the bomb and its attachment is caused to signal the operator on the aerial craft, so that the operator may release the bomb at the proper time.

A further accomplishment of the device of the present invention is its capability of definitely locating the object sought so that the bomb may be released at the precise moment to become effective.

The invention consists in certain novel combinations and arrangements of parts for carrying the bomb in position suspended from an aerial craft, and in dispensing said bomb or releasing it so that it may do its effective work, as will be more fully hereinafter explained.

In the accompanying drawings I have illustrated one complete example of the physical embodiment of my invention constructed according to the best mode I have so far devised for the practical application of the principles of the invention.

Figure 1 is a view, showing in side elevation, the complete apparatus as suspended from a supporting frame. Fig. 2 is a similar view taken at right angles to Fig. 1. Fig. 3 is an enlarged sectional view of the housing or casing which incloses the bomb, showing the operating parts in elevation, and showing in dotted lines the projectile as having been released from the apparatus.

In the preferred embodiment of my invention, as illustrated in the drawings, the device is depicted as suspended from a frame work A, which is supposed to be a portion of the rigging or supporting frame of a flying machine, air ship, or other aerial craft. The apparatus is supported from this frame A, by means of a forked U-shaped yoke B, preferably of metal, and designed to accommodate the two drums C and D. These drums are journaled in the yoke on shafts C′ and D′, and they are adapted to move in unison through the engagement of the two pinions E and F on the respective shafts. A crank handle G is employed to revolve these drums, and it will be apparent that the drums may be moved in unison in either direction by operating the crank handle G. I have illustrated three ropes or cables, two of them as the suspending rope 1, and the latch rope 2, passing over the drum C, and the pull rope 3 passing over the drum D. This arrangement is provided in order to prevent the three lines or ropes becoming tangled, and by using two drums, the lines are kept separated, but at the same time are kept in close proximity at all times.

The suspending rope 1 supports the entire projectile and its casing 4. This casing is an open bottom shell of non-magnetic material, and having a rounded closed upper end and its open lower end being provided with a closure or hinged bottom 5, also of non-magnetic material. The bottom 5 is hinged to the casing at 6, and as clearly seen in Fig. 3, it is adapted to swing downwardly when opening the casing. The hinged bottom is supported in closed position by a catch 7 pivoted at 8 on the casing diametrically opposite the hinge 6, and the hooked end 9 of the catch fits under a boss 10 projecting from the bottom 5, and by means of this boss the hooked end of the catch holds the bottom in closed position. The catch is controlled by the pull rope 3 which is attached to the catch by the use of a pivoted link 11. The pull rope 3 is passed through an eye 12 attached at the upper end of the casing 4, and by means of a second eye 13, carried by the suspending rope 1, the pull rope is guided up to a position in proximity with the other ropes or lines 1 and 2, and then said rope is conveyed to the revoluble drum D. It will be apparent that an upward pull on the rope 3 will move the catch 7 and withdraw the hooked end 9 of the catch from under the boss 10, and as shown in Fig. 3, when this action takes

place it will be apparent that the unsupported hinged bottom 5 will swing by gravity on its hinge 6 to the vertical position shown in dotted lines, Fig. 3.

The suspending rope 1 is connected to the casing 4 by means of an eye bolt 14 which is fixed in the upper end of the casing 4, and this bolt in conjunction with the bracket 15 within the casing 4, forms a support for the latch 16 by means of which the bomb 17 and its magnet 18 are suspended in the casing 4. The latch is pivoted at 19 within the casing 4, and at 20 the rope 2 is attached. The latch is formed with a curved bolt 21 on an arc struck from the pivot center 19, and the bolt engages a keeper 22 which is a perforated portion of the bracket 15. The bomb is suspended from this bolt by means of an eye bolt 23 fixed at the upper end of the bomb and passed over the bolt 21. In Fig. 3, the arrangement of these parts is clearly shown, where the bolt is passed through the eyebolt and is seated in the keeper 22. It will be apparent that to release the bomb, the latch bolt must be withdrawn from its keeper and the eyebolt 23, and for this purpose the latch rope 2 is utilized. In Fig. 3, it will be seen that the latch rope is passed through an opening 24 in the upper end of the casing, and is attached at 20 to the latch. A pull on the latch rope swings the latch and its bolt to the dotted position in Fig. 3, and the bomb is released as the latch bolt is withdrawn from the eyebolt.

The bomb may be of any suitable explosive, and of any accepted type, but in the drawings I have illustrated a conventional form of firing pin or detonator 24 which projects from the bottom of the magnet and is passed interiorly therethrough to the bomb. The bomb is exploded when this firing pin or detonator is driven home, and this is accomplished when the firing pin contacts with a body, and the weight or impact of the falling bomb drives the detonator into the bomb to fire the explosive charge contained therein.

In Figs. 1 and 2, I have illustrated an indicating or signaling device, which is of the simplest form and construction, and embodies a coil spring 26 which is attached at two points on the suspending rope 1, so that a portion of the rope will be slacked, as shown in Fig. 1. The other ropes 2 and 3, are shown also as slacked. This arrangement of the spring is provided so that the diagrammatic signaling device indicated by the stationary arrow 27 and the movable arrow 28, carried by the spring 26, may indicate to the attendant or operator the exact time at which to discharge or release the bomb. This signal is operated through the magnetic influence of a steel battleship exerted on the magnet 18 carried within the casing 4. Thus, with the casing 4 dangling or suspended at a suitable distance from an aerial craft, and the craft in motion, when the apparatus inclosed within the casing passes over the steel battleship, the magnetic influence "pulls" on the casing, and the spring 26 as a result is extended, and this extension of the spring actuates the diagrammatic signaling device so that the two arrows 27 and 28 are separated and this separation gives a visual signal to the attendant, and he is informed that the bomb is in position to be discharged or released. In discharging the bomb from the casing, the pull rope 3 is first operated to release the hinged bottom 5, and then the latch 2 is pulled in order to free the latch bolt 21 from the eye bolt 23. These two releasing operations may be accomplished by hand, or they may be accomplished automatically, if desired. It will be understood, however, that the casing 4 is not released, but remains suspended by its rope 1. The moment the bomb and its magnet are released, they drop as a projectile from the casing 4, and fall upon the battleship, and the bomb is exploded by the impact upon its firing pin or detonator. The descent of the bomb is controlled to an extent by the magnetic influence between the steel of the battleship and the magnet 18 carried by the bomb, so that in this manner the bomb is guided to its destination.

It will be understood, of course, that the spring 26 is of sufficient strength to support the casing 4 and its contents, but it is also of sufficient delicacy and sensitiveness to respond to a "pull" upon the magnet in the casing, and in this manner the spring and its signaling device act, and indicate the presence of a battleship. This magnetic influence could also be felt by an attendant who is holding the crank handle G. In this manner the presence of the battleship and its location within the inflence of the magnet would be indicated by a pull upon the suspending rope 1, and this pull would be transmitted through the drums C and D, so that its effect would be felt in the crank handle G, and transmitted to the hand of the attendant holding this crank handle.

After the bomb has been discharged or released from the casing 4, the casing may be hauled up to the aerial craft, and reloaded for another operation.

In this manner it will readily be seen that the projectile may be discharged with unerring and precise action so that it will strike its target, with the required result.

What I claim is:

1. The combination with a supporting means, of a casing having a hinged bottom and a retaining catch therefor with means for releasing the catch, a latch bolt pivoted within the casing, an explosive pro-

jectile and a magnet suspended upon said bolt, a rope for withdrawing said bolt to release the projectile, a suspending rope for the casing, and signaling means connected to said suspending rope whereby the said signaling means are actuated when the magnet is attracted by an iron vessel.

2. The combination with an aerial supporting craft, of a bomb suspended therefrom, a magnet attached to the bomb, and signal means connected with the suspending means for the bomb, whereby said signaling means are actuated when the magnet is attracted by an iron vessel.

3. The combination with an aerial craft, a casing and a suspending rope, of a magnet in the casing, a spring attached to said rope leaving a slack portion therein, and said spring adapted to be extended when the magnet is attracted by the presence of a magnetic object.

In testimony whereof I affix my signature in presence of two witnesses.

ANSELM PARSONS.

Witnesses:
CHARLES S. THURSTON,
MAUDE J. COREY.