May 11, 1965 R. E. SWANK 3,183,513

MACHINE FOR RECORDING SELECTIONS

Filed Sept. 18, 1961 3 Sheets-Sheet 1

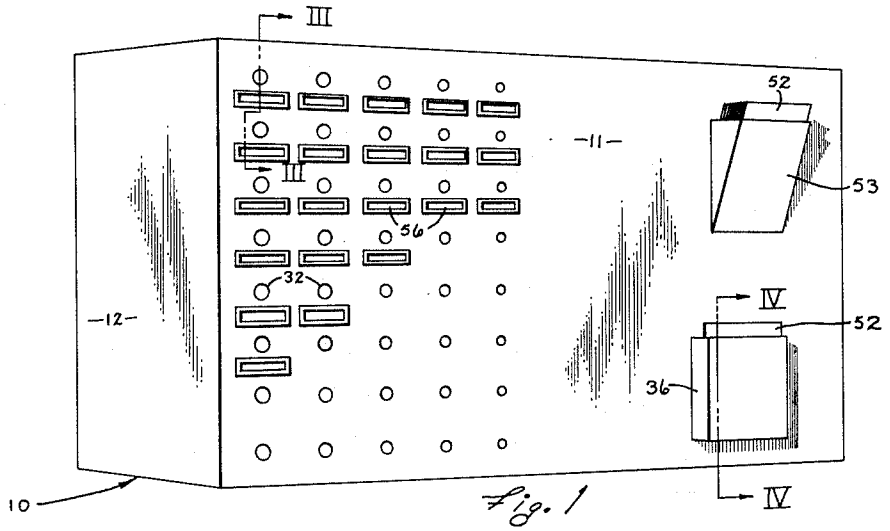

Fig. 1

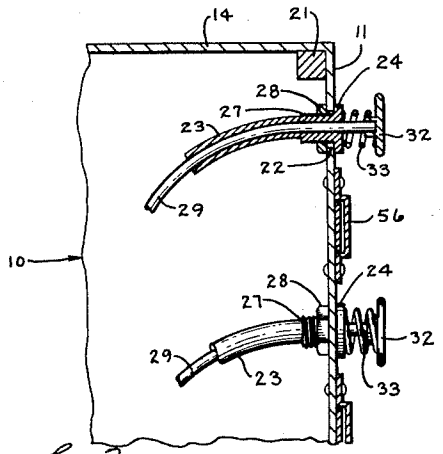

Fig. 3

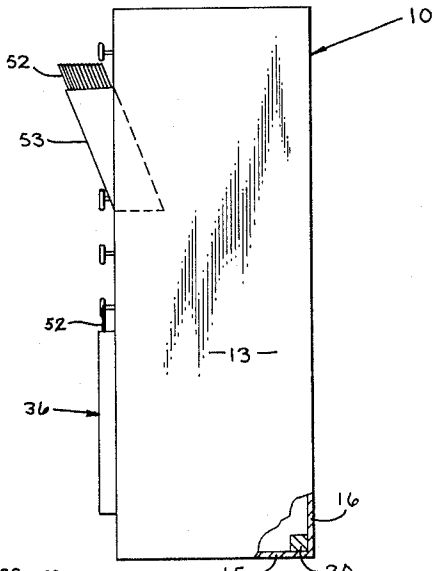

Fig. 2

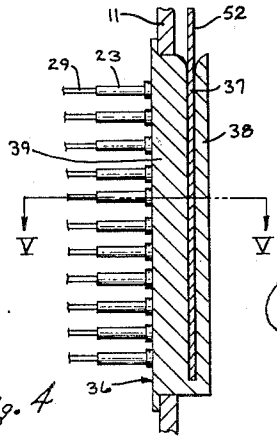

Fig. 4

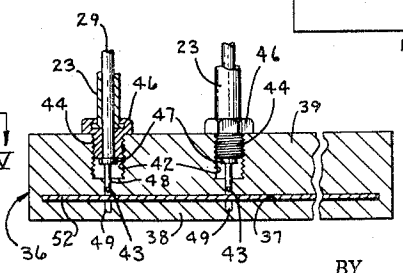

Fig. 5

INVENTOR.
RICHARD E. SWANK
BY Woodhams, Blanchard & Flynn
ATTORNEYS

May 11, 1965 R. E. SWANK 3,183,513

MACHINE FOR RECORDING SELECTIONS

Filed Sept. 18, 1961

3 Sheets-Sheet 2

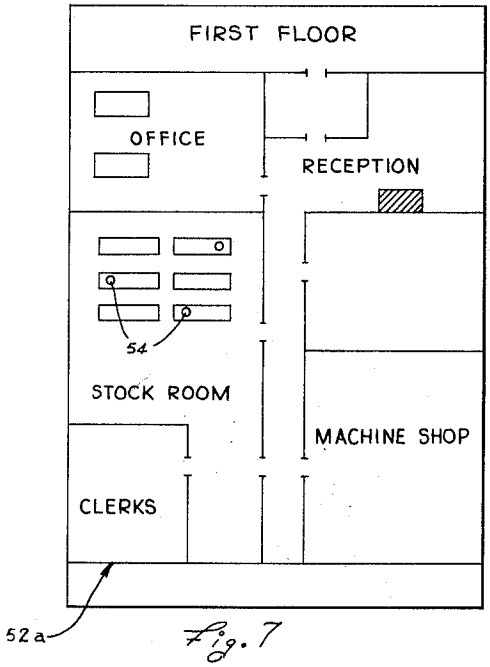

Fig. 7

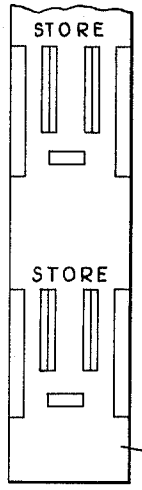

Fig. 13

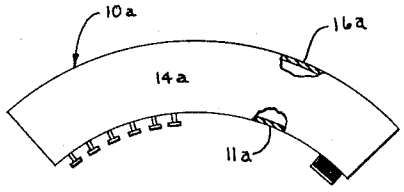

Fig. 12

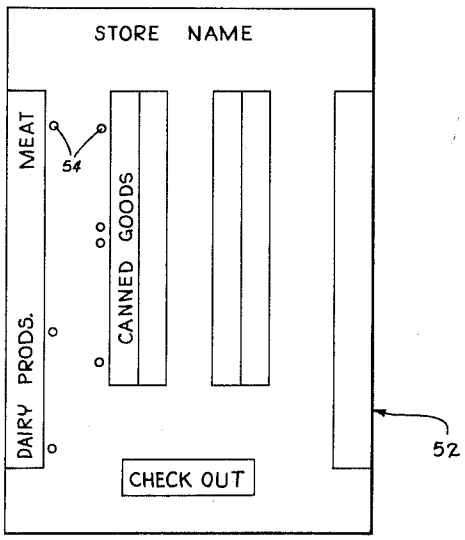

Fig. 6

INVENTOR.
RICHARD E. SWANK

BY Woodhams, Blanchard & Flynn

ATTORNEYS

May 11, 1965 R. E. SWANK 3,183,513

MACHINE FOR RECORDING SELECTIONS

Filed Sept. 18, 1961 3 Sheets-Sheet 3

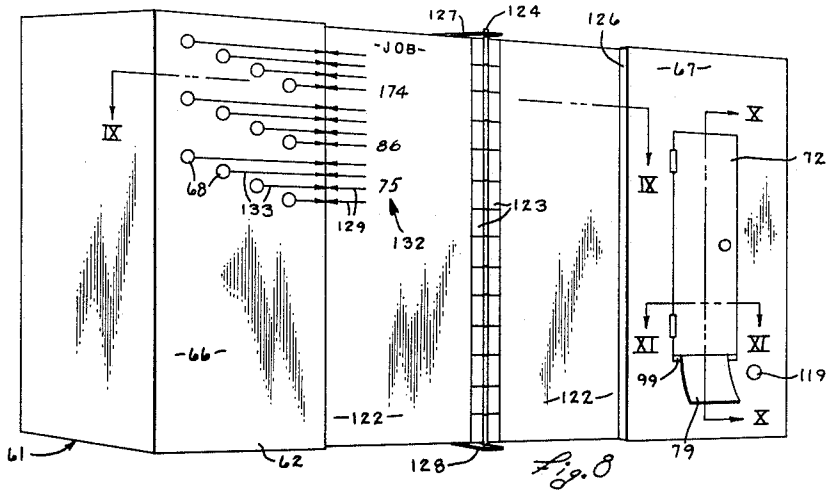

Fig. 8

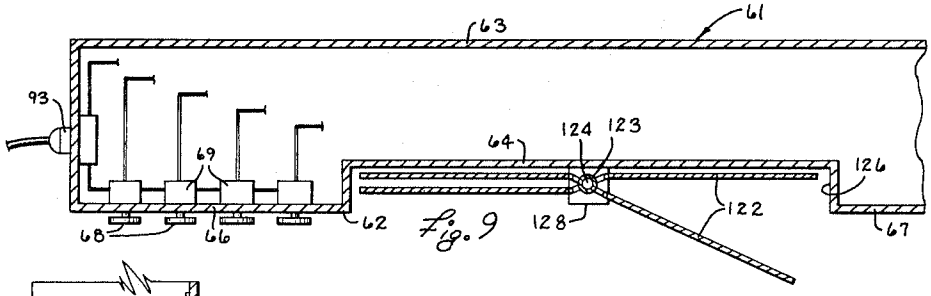

Fig. 9

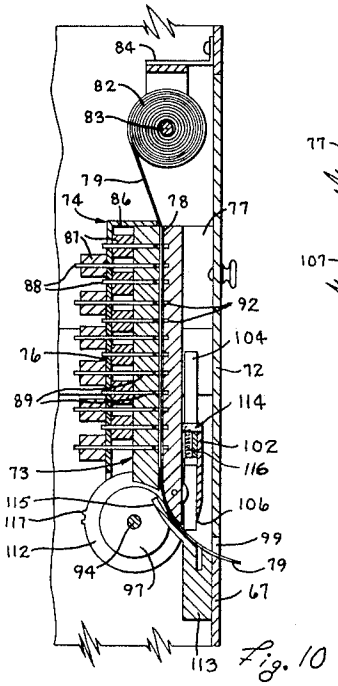

Fig. 10

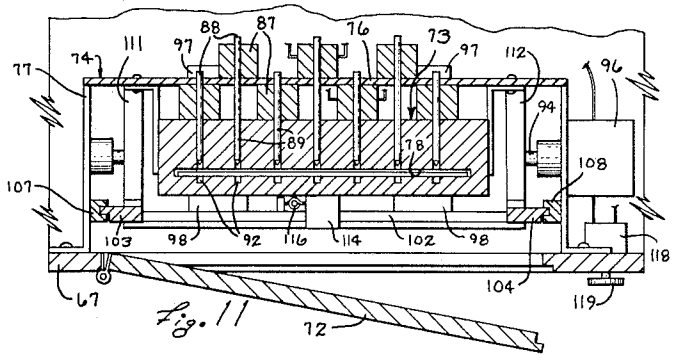

Fig. 11

INVENTOR.
RICHARD E. SWANK

BY
Woodhams, Blanchard and Flynn

ATTORNEYS

United States Patent Office 3,183,513 Patented May 11, 1965

3,183,513

MACHINE FOR RECORDING SELECTIONS

Richard E. Swank, Battle Creek, Mich.
(12520 Pacific Ave., Los Angeles, Calif.)

Filed Sept. 18, 1961, Ser. No. 138,780
11 Claims. (Cl. 346—17)

This invention relates in general to an apparatus for recording selections and, more particularly, to a type thereof having mechanism for making an impression upon an impression receiving member so that it indicates certain selections made by operating manually actuable means operably associated with the impression mechanism. For example, the invention may be embodied in a machine whereby selected marks are made upon a sheet in response to manual operation of identifiable buttons to locate the previously unknown positions of certain items with respect to a selected pattern appearing on the sheet, which may be paper or the like.

There has long been a very apparent need in both commerce and industry for some means of orienting a variety of items or facts with respect to their current location or status, particularly where many such items exist and/or where their position or status is often changed. For the purpose of illustration only, specific reference is made to a large supermarket, a large department store or a large warehouse containing a great many different types of merchandise, the location of individual items of which cannot be easily remembered.

Using the supermarket as a specific example, it is frequently necessary for the customer to walk through many rows of merchandise and/or to visually inspect numerous, non-pertinent items of merchandise, sometimes in a vain effort, to locate a particular item which is desired. As an alternative to this procedure, the customer must try to locate a clerk and obtain verbal directions to the particular item. Frequently, such directions are only general in nature and, therefore, necessitate further searching by the customer. As any busy person will attest, either of these present procedures can be very frustrating, particularly for the customer who wants only a few items and is either an infrequent shopper or is unfamiliar with the particular store involved.

In order to overcome the obvious adverse reaction by the customer resulting from this frustration, supermarkets are obliged to hire additional clerks who, for the most part, simply circulate through the store for the primary purpose of assisting customers in locating merchandise.

The busy shopper is not particularly impressed with the proprietor's argument that the present procedures often induce the customer to purchase larger amounts of merchandise or, from a purely unselfish viewpoint, that this system helps the customer to purchase merchandise which he needs and would otherwise forget. However, the importance of reminding the customer to purchase the items of merchandise which the customer needs, and would certainly purchase if reminded, cannot be overlooked. This is a genuine, unselfish service which is generally appreciated by the customer. Nevertheless, it does not follow that substantially aimless and aisle-by-aisle wandering through a large supermarket actually reminds the customer of needed, but forgotten, merchandise. Moreover, it definitely slows down the movement of customer traffic through the store, which merely compounds the problem for the busy shopper.

Accordingly, a primary object of this invention has been the provision of an apparatus whereby shoppers, for example, in large markets or stores can be directed promptly and accurately to those locations in the building or on the premises where the items desired by the customer can be found, and whereby such locations will be recorded on a permanent and portable record which the customer

can carry, thereby materially reducing the time presently required to locate such items under existing procedures.

A further object of this invention has been the provision of an apparatus, as aforesaid, wherein the operator of the apparatus will be reminded of needed merchandise during the process of using the apparatus for the purpose of selecting and recording the items which he intends to purchase, and wherein the customer will be provided with a sheet of paper, or the like, bearing markings or impressions thereon which preferably indicate not only the location in the store of the desired merchandise, but also the nature of such merchandise.

A further object of this invention has been the provision of an apparatus, as aforesaid, which can be easily understood and operated by any person capable of purchasing merchandise in a self-service market or store, which can be manufactured inexpensively, which has a pleasing appearance, which is entirely foolproof in operation, which requires little or no maintenance, and which can be conveniently installed in a relatively small space so that it does not materially reduce or interfere with the space required for the display of the merchandise.

Other objects and purposes of the invention will become apparent to persons familiar with the problems which it can solve upon reading the following descriptive material and examining the accompanying drawings, in which:

FIGURE 1 is a perspective view of an apparatus embodying the invention.

FIGURE 2 is an end elevational view of said apparatus.

FIGURE 3 is a sectional view taken along the line III—III in FIGURE 1.

FIGURE 4 is a sectional view taken along the line IV—IV in FIGURE 1.

FIGURE 5 is a sectional view taken along the line V—V in FIGURE 4.

FIGURE 6 is a plan view of an impression receiving sheet.

FIGURE 7 is a plan view of another impression receiving sheet.

FIGURE 8 is a perspective view of an alternate apparatus embodying the invention.

FIGURE 9 is a sectional view substantially as taken along the line IX—IX in FIGURE 8.

FIGURE 10 is a sectional view taken along the line X—X in FIGURE 8.

FIGURE 11 is a sectional view taken along the line XI—XI in FIGURE 8.

FIGURE 12 is a broken, top view of a modified construction for the machine shown in FIGURE 1.

FIGURE 13 is a fragment of a strip of sheet material used in the apparatus of FIGURE 8.

For convenience in description, the terms "upper," "lower," "front," "rear" and words of similar import will have reference to an apparatus embodying the invention substantially as appearing in FIGURES 1 and 8. The terms "inner," "outer" and derivatives thereof will have reference to the geometric center of said apparatus and parts thereof.

General description

The objects and purposes of the invention, including those set forth above, have been met by providing an apparatus comprised of a casing having a plurality of manually operable members preferably supported on the front side of the casing so that they can be conveniently reached by the user of the apparatus. Suitable indicia, such as a label, is placed adjacent each manually operable member for indicating the subject matter to which the member applies. A sheet holding device is also mounted upon, preferably on the front side of, the casing for supporting a manually engageable sheet where it can be easily reached

by said user. Impression forming mechanism is provided in the casing adjacent the sheet holding device for applying a plurality of impressions upon a sheet within the sheet holding device. Connecting means is provided between the manually operable members and the impression forming mechanism to convert the manual actuation of the members into an impression upon a sheet in the sheet holding device. At least in effect, the assembly including the manually operable members serves as a master unit and the impression forming mechanism serves as the slave unit which is spaced from and operated by the master unit.

The sheet material may be in the form of a roll of such material from which a predetermined length is severed after the impression action, or it may be in the form of a plurality of cards which are inserted, one at a time, into the sheet holding device and removed therefrom after the impressions are made upon the sheet.

Detailed construction

In a preferred embodiment of the invention (FIGURE 1), the apparatus or machine for recording selections includes a frame structure or casing **10** having a front wall **11** a pair of end walls **12** and **13** (FIGURES 1 and 2), a top wall **14** (FIGURE 3), a bottom wall **15** (FIG. 2) and a rear wall **16**. These various walls may be fabricated from any convenient sheet material, such as sheet metal, fiber board, wood, plastic or the like, which is braced, if not held, by corner strips such as those shown at **20** and **21** in FIGURES 2 and 3, respectively, in a substantially conventional manner.

The casing **10** is disclosed in FIGURES 1 and 2 as being substantially rectangular in shape. However, it will be recognized, as disclosed in FIGURE **12**, that the casing may have a variety of different shapes within the purview of the invention. The casing **10***a* has an arcuate top wall **14***a*, hence a convex rear wall **16***a* and a concave front wall **11***a*.

The front wall **11** of the casing **10** has a plurality of uniformly spaced openings **22** (FIGURE 3) which, in this particular embodiment, are arranged in vertical and horizontal rows. An elongated and flexible sleeve **23**, which has an annular external flange **24** at one end thereof, is snugly received through each opening **22** so that the flange **24** bears snugly against the front surface of the front wall **11**. The sleeve **23** preferably has an enlarged portion **27** adjacent the flange **24**, which enlarged portion is externally threaded for threaded engagement by a nut **28** and which cooperates with the flange **24** to grip the adjacent portion of the front wall **11**, thereby holding the flanged end of the sleeve **23** in position.

An elongated, flexible cable **29** is snugly, but rotatably and slidably, disposed within the sleeve **23** for movement lengthwise thereof. One end portion of the cable **29**, which extends through and beyond the flange **24**, is preferably stiffened and is secured to a manually engageable button **32**. A spiral spring **33** encircles the cable **29** between the flange **24** and the button **32** for continuously urging the button **32** away from the flange **24**.

A card holding device **36** (FIGURES 4 and 5) is comprised of a block of material, such as plastic, wood or metal, having an upwardly opening slot **37** between and substantially parallel with the front wall **38** and rear wall **39** of said block. The rear wall **39** has a plurality of uniformly spaced, threaded openings **42** (FIGURE 5) which may be arranged as desired or required. In this particular embodiment, said openings **42** are preferably arranged in substantially vertical and horizontal rows. The threaded openings **42** are connected to the slot **37** by relatively small, coaxial guide openings **43** which are preferably smooth bore.

An externally threaded collar **44** (FIGURE 5) is rotatably supported coaxially upon the other end of each sleeve **23** remote from the flange **24** and said collar **44** is threadedly receivable into a threaded opening **42**. The collar **44** has an integral nut **46** spaced from its free

end to effect and limit accurately the insertion of the collar **44** into the threaded opening **42**.

The flexible cable **29** (FIGURE 5) has at its end adjacent the card holding device **36** an integral, annular and external flange **47**, which is engageable with the free end of the threaded collar **44** for limiting the movement of the cable **29** back through the sleeve **23** under the urging of the spiral spring **33** (FIGURE 3). A pin **48** (FIGURE 5) is coaxially secured to the flange **47** and is slidably disposed within the guide opening **43**. When the flange **47** is bearing against the threaded collar **44**, the pin **48** is preferably spaced slightly from the slot **37**. However, upon actuation of the button **32**, which requires compression of the spring **33**, the pin **48** is urged into and through the slot **37** and into a recess **49** in the holding device **36** on the opposite side of the slot **37**.

Each flexible cable **29** (FIGURE 5) is preferably arranged so that its corresponding pin **48** will form an impression on or in a card or sheet **52**, which is properly disposed within the slot **37**, upon actuation of the appropriate button **32** associated with said cable. A container **53** is mounted within and upon the front wall **11**, preferably directly above the holding device **36**, for supporting a supply of cards **52**.

Indicia holding means (FIGURE 3), such as the label holder **56**, is mounted upon the front wall **11** adjacent each button **32** so that the indicia held in said holders is clearly and easily visible by the operator of the apparatus. Each card **52** is preferably provided with selected markings, such as the location of counters, shelves and goods in a supermarket, as shown on the card **52** in FIGURE 6. By appropriate mounting of the threaded collars **44** of the sleeves **23** upon the card holding device **36**, each cable **29** will be able, upon operation of its associated button **32** to mark the card **52** with and in the proper location of the item listed on the label held in the label holder **56** associated with said button.

For example and starting from the upper lefthand corner of FIGURE 1, the various categories on types of merchandise, such as food, can be listed on labels and placed in the holders **56** in alphabetical order from left to right and from top to bottom. Then, by appropriate mounting of the other ends of the cables on the card holding device, each cable will punch the card **52** with an opening **54** in the appropriate position corresponding to the location in the store of the merchandise listed on the associated label.

In the embodiment relating to the supermarket, the card **52** will carry on one side thereof the floor plan of the supermarket including the location of shelves, cabinets and the like. Where desired, the locations of at least the broad categories of mechandise, such as dairy products, meat, canned goods, cereals and the like may be indicated upon the card. The reverse side of the card may be used for advertising, information or the like.

It will be apparent that, by using a card **52***a* (FIGURE 7), the apparatus of FIGURE 1 can be utilized to locate employees, stock, machines, jobs and the like in a factory.

Operation

The apparatus of the invention may, for example, be located near the entrance of a supermarket and installed for convenient operation by the customers. A tag or label identifying a particular type or group of products or merchandise is placed in each label holder **56**, and the products are preferably, but not necessarily, arranged in alphabetical order starting at the upper, lefthand corner of the front wall. By prearrangement, the collar **44** at the opposite end of the sleeve **23** is threadedly inserted into the threaded opening **42** in the card holding block **36** so that its associated pin **48** will be located in the desired position with respect to the pattern on a card **52** (FIGURE 6), which is properly disposed within the card slot **37** (FIGURE 5) in the holding device **36**. Inasmuch as both the sleeve **23** and the cable **29** are flexible, the col-

lar 44 on the sleeve 23 can be mounted in any one of the openings 42 in the holding device 36, as desired or required.

It may become desirable to change the location of one or more sleeves 23 with respect to the holding device 36 in order to adapt the apparatus to changes in the location of merchandise. This can be accomplished merely by engaging the nut 46 and causing the threaded portion 44 on the sleeve 23 to be screwed into or out of the threaded openings 42. After the proper changes or exchanges have been made in the location of the threaded collars 44, the apparatus is immediately ready for operation. It will be recognized that, under some circumstances, there may be more threaded openings 42 in the holding device 36 than there are sleeves 23 and, alternatively, there may be more sleeves than threaded openings.

In using the apparatus of the invention in a supermarket, the customer takes a card 52 (FIGURE 1) from the container 53 and inserts it into the slot 37 with the floor plan side of the card facing inwardly. The customer then manually depresses those buttons which are directly above a label holder identifying merchandise which the customer wishes to purchase or examine. Depression of a button 32, which is part of a master unit, causes the cable 29 to move through the sleeve 23 whereby the pin 48, which is part of a slave unit and is secured to the opposite end of the cable 29, is urged to perforate the card 52 (FIGURE 6) at 54 adjacent the counter or cabinet shown thereon, which holds the desired merchandise in the market. When the button 32 is released, the spiral spring 33 returns it to its initial position. It will be seen that the labels in the label holders 56 serve not only to identify the buttons which should be operated, but also serve as a reminder or check-list for the customer who is about to shop in the supermarket. Moreover, the card 52, after it has been perforated by the pins 48, serves both as a shopping list and as a map and guide to the locations of the merchandise to be purchased or examined.

The apparatus of the invention is capable of converting existing so-called self-service markets into truly self-service markets, wherein it becomes unnecessary to have clerks available for directing customers to the location of merchandise.

It will be apparent that, by using appropriate labels in the label holders 56 and by properly locating the sleeves 23 with respect to the threaded openings 42 in the card holding device 36, the apparatus of the invention can be easily and quickly adapted for locating merchandise in a warehouse, employees in a manufacturing facility, displays in an exhibition hall, or the like. In such case, it might be advantageous to provide a casing 10*a* (FIGURE 12), which is curved around a substantially central location in which a receptionist or guide may be seated.

Alternate structures

The alternate apparatus shown in FIGURES 8 and 9 includes a casing 61 which, generally speaking, may be substantially similar to the casing 10 shown in FIGURE 1. That is, it has a front wall 62 and rear wall 63 which are connected by end walls, a top wall and a bottom wall in substantially the same manner as described above with respect to the casing 10. However, the front wall 62 of the casing 61 has a central recessed panel 64, which is flanked by the side panels 66 and 67. In this particular embodiment, a plurality of manually operable buttons 68 are connected respectively to a plurality of normally open switches 69, which are mounted upon the innerside of the panel 66. By depressing one of the buttons 68, its associated switch 69 is closed.

The right side panel 67 (FIGURES 8, 10 and 11) contains an access door 72. A strip guiding device 73 is supported by the bracket 74 (FIGURES 10 and 11) within the casing 61 adjacent the access door 72. More specifically, the bracket 74, which may be fabricated from sheet metal, has a back plate 76 which is parallel with and spaced from the panel 67 and is supported thereon by a plurality of frontwardly extending legs 77, which are secured to the panel 67. The strip guiding device 73 comprises, in this particular embodiment, an elongated flat and substantially rectangular block which is supported upon the bracket 74 by means of flanges 86 (FIGURES 10 and 11) secured to and extending from the back plate 76. Said block, which is made of plastic, metal or the like, has a thin, broad slot 78 extending vertically therethrough substantially parallel with the wall portion 67. The slot 78 is arranged to slidably and snugly receive the strip 79 of paper from a roll 82 thereof, which is rotatably supported upon the shaft 83 above the device 73. The shaft 83 is mounted at its ends upon the bracket 84 (FIGURE 10), which is secured to adjacent side of the panel 67. The shaft 83 is preferably arranged so that it can be disconnected from the bracket 84 for the purpose of placing a new roll of paper upon said shaft.

A plurality of solenoids 87 are mounted upon and/or between the back plate 76 and the strip guiding device or block 73 so that the core bars 88 thereof are parallel with each other and are slidably receivable into the guide openings 89, which extend from the rear surface of the strip guiding block 73 to the slot 78 therein. Recesses 92 are provided in the block 73 adjacent the slot 78 and in alignment with the guide openings 89. The core bars 88 are arranged and constructed so that energization of their solenoids will cause said bars to move along the guide openings 89 through the block 78 and into recesses 92. Thus, a strip 79 of paper disposed in the slot 78 will be perforated by the ends of the core bars 88, when the solenoids are energized.

As shown in FIGURE 13, the strip 79 of paper may have imprinted on its inner side uniformly spaced floor plans of the supermarket or the like in which the apparatus of FIGURE 8 is utilized. Thus, with the strip 79 in the proper position, the core bars 88 will perforate the portion of the strip disposed in the guiding device 73 in substantially the same manner as set forth above with respect to the apparatus disclosed in FIGURE 1. Each of the solenoids 87 is connected in series with a selected switch 69 (FIGURE 9) and a source 93 of electrical potential. Accordingly, closure of a switch 69, by depressing its associated button 68, closes an electrical circuit to a solenoid 87 thereby causing its core bar 88 to move through the slot 78.

A shaft 94 (FIGURE 11) is horizontally and rotatably supported upon the lower end of the bracket 74 and is connected at one end to a motor 96 which is also mounted upon the bracket 74. A pair of rollers 97 are mounted upon and rotatable with the shaft 94 below and adjacent the lower end of the strip guiding device 73. A second pair of relatively smaller rollers 98 are rotatably supported upon the lower, front edge portion of the guiding device 73 so that they are peripherally and rotatably engaged by the rollers 97. The strip 79 of paper is fed between and snugly engaged by said rollers 97 and 98 for advancement thereby downwardly through the slot 78 and outwardly through a slot 99 in the wall portion 67 directly below the door 72 therein.

A knife 102 (FIGURE 11) is supported within the casing 61 adjacent the door 72 upon a pair of vertical racks 103 and 104 so that the cutting edge 106 (FIGURE 10) of said blade extends horizontally and faces downwardly. The racks 103 and 104 are, in turn, guidingly supported upon and between a pair of rack guides 107 and 108 which are mounted upon the opposing faces of the legs 77 of the bracket 74. The teeth on the racks 103 and 104 are engaged by the segments of teeth 117 on the pinions 111 and 112 which are mounted upon the shaft 94 in radial alignment with said racks. The pinions 111 and 112 have, in this particular embodiment, small segments of teeth 117, which are arranged

so that they engage the racks 103 and 104 near the end of each 360 degrees of rotation by the pinions, whereby the knife 102 is moved downwardly at the very end of the rotational movement of the shaft 94 and the rollers 97, which advance the strip 79 through the slot 99. A die 113 is mounted upon the wall portion 67 adjacent and directly below the slot 99 for engagement by the edge 106 of the knife 102 in the shearing of the strip 79 of paper. A curved plate 115 is mounted upon the upper, inner edge of the die 113 and curves upwardly adjacent to the lower edge of the device 73 to guide the strip 79 downwardly across the die and through the slot 99.

A stop 114 is secured to the front side of the guiding device 73 (FIGURES 11 and 10) to engage, and limit the upper movement of the knife 102. A spiral spring 116 is connected between the stop 114 and the knife 102 for the purpose of continuously urging the knife 102 upwardly into a position adjacent the stop 114. Thus, as soon as the pinions 111 and 112 have rotated in a clockwise direction (FIGURE 10) to a point where their teeth 117 no longer engage the teeth on their respective racks, the spiral spring 116 returns the knife 102 upwardly into its FIGURE 10 position.

The motor 96 (FIGURE 11) is connected in series with a normally open switch 118 and a source of electrical energy, such as that indicated at 93 in FIGURE 9. The switch 118, which is manually operated by a push button 119 (FIGURE 11), and the motor 96 are arranged so that the motor will rotate approximately one revolution and then stop after the button 119 is operated. Accordingly, the advancement of the strip 79 and the shearing of the advanced portion of said strip will be automatically carried out each time the button 119 is operated to close the switch 118.

The form of the invention disclosed in FIGURE 8 includes a plurality, here four, of indicia bearing panels 122 which are supported by hinges 123 mounted upon the panels and the vertical hinge rod 124, which is supported centrally within the recess 126, defined by the recessed portion 64 of the front wall 11. The hinge rod 124 is held in a vertical position spaced slightly from the recessed wall 64 by upper and lower brackets 127 and 128, respectively. The movable panels 122 are, preferably, relatively thin and the recess 126 is of sufficient depth that all four panels can be disposed on the same side of the rod 124 in substantially parallel positions without projecting materially beyond the front surfaces of the flanking panels 66 and 67.

Each panel 122 (FIGURE 8) has on one side thereof, which is facing outwardly when the panel is adjacent the flanking panel 66, a plurality of horizontal lead lines 129 which are vertically spaced along the leftward edge of each panel. The spacing between said lead lines is preferably arranged so that indicia 132, such as numerals, words or the like, which are placed at the rightward ends of said lines 129, can be easily read by an operator of the machine having normal vision. Under some circumstances, it may be possible to stagger the indicia at the ends of adjacent lead lines and thereby decrease the spacing between said lead lines.

The buttons 68 on the flanking panel 66 are preferably in sloping rows so that each button can be connected by an indicator line 133 leading horizontally to the rightward edge of the flanking panel 66. The lead lines 129 are preferably aligned with the indicator lines 133 so that each button on the flanking panel 66 can be traced along its indicator line an aligned lead line on the panel 122 to a particular indicia appearing on each of the panels 122. The indicia 132 may be mounted upon each panel 122 by means of label holders, such as the label holders 56 discussed above with respect to the form of the machine shown in FIGURE 1.

The indicia 132 may, for example, be in the form of names of employees, items of merchandise, locations of displays or the like. The strip material 79 will normally carry uniformly spaced, identical replicas of the floor plan of the building or the like in which the people, items or displays can be found. Thus, by operating the appropriate button on the flanking panel 66, the strip 79 will be marked to indicate on the floor plan the location of the indicia associated with the button. By providing a plurality of movable panels 122, each button 68 can be used to locate a plurality of different items, for example, in substantially the same location.

The operation of the apparatus disclosed in FIGURE 8 is, generally speaking, substantially the same as the operation of the apparatus disclosed in FIGURE 1. That is, by manually operating a button 68 (FIGURE 9) the solenoid core bar 88 corresponding thereto is caused to perforate the strip 79 of paper to indicate on the strip of paper the location of the item identified with the button operated. In the apparatus of FIGURE 9, the connections between the buttons 68 and the core bars 88 are electrical instead of mechanical, which permits the use of a casing 61 substantially smaller than the casing 10 for the same job.

A major difference between the apparatus of FIGURE 1 and that of FIGURE 8 resides in the use of a strip 79 of paper in place of the cards 52. After the roll 82 of paper is mounted upon the shaft 83, the strip 79 is threaded down through the slot 78 and thence between the large rollers 98 along the upper surface of the guide plate 115 toward the slot 99 in the wall portion 67. This threading can be accomplished manually when the access door 72 is open.

In operating the apparatus of FIGURE 8, the operator first consults the panels 122 to determine which one thereof contains the subject matter which he wishes to locate, regardless of what this subject matter may be. When this determination has been made, the appropriate panel is moved into a position adjacent, and substantially parallel with, the side panel 66. The operator then visually follows the lead line 129 and aligned indicator line 133 from the desired subject matter or indicia on the panel 122 to the corresponding button 68 on the left panel 66. By depressing this button, the associated switch 69 is closed whereby the corresponding solenoid 87 (FIGURE 11) is energized and its core bar 88 perforates the strip 79 of paper disposed within the strip holding device 73. The operator can continue this procedure of depressing buttons 68 as long as required to obtain the desired record on the strip 79.

The operator now depresses the button 119 on the right panel 67 whereby the switch 118 is closed and the motor 96 is energized. Due to the particular arrangement of the switch 118 and motor 96, the shaft 94 is rotated one complete revolution in a clockwise direction, as appearing in FIGURE 10. At the start of this rotational movement, the teeth 117 on the pinions 111 and 112 are disposed just below a position of engagement with the racks 103 and 104. Accordingly, during at least the first three quarters of the rotation of the shaft 94, the racks 103 and 104 are not engaged by the teeth 117 and, therefore, remain in the raised position. However, the strip of paper 79 is advanced by the rollers 97 and 98 during this first portion of rotation of the shaft 94, whereby the strip is moved downwardly through the strip guiding device 73 and out through the slot 99 in the wall portion 67.

The teeth 117 engage the racks 103 and 104 during the last portion of the shaft rotation and thereby move the knife 102 downwardly so that the cutting edge 106 thereof engages and penetrates the strip 79 in a shearing action with the die 113. The knife 102 is mounted so that the teeth 117 become disengaged from the racks 103 and 104 just after the knife 102 engages and shears the strip of paper 79. Thus, the spiral spring 116 can immediately return the knife 102 upwardly against the stop 114. The rotational movement of the shaft 94 preferably stops ap-

proximately as the teeth **117** are disengaged from the racks **103** and **104**. Accordingly, the mechanism responsive to rotation of the shaft **94** for advancing the strip of paper and shearing it is automatically set for the next advancing and shearing operation.

The portion of paper cut from the strip **79** will include one complete floor plan or diagram of the building with appropriate perforations thereon identifying the locations of the desired subject matter in the building. The operation of perforating a portion of the strip of paper, advancing the strip and shearing off the perforated portion thereof can be repeated indefinitely as long as a supply of paper strip is provided.

It will be recognized that, although the above description relating to both forms of the apparatus was restricted to structures whereby the card or strip of paper is perforated, other impression or marking means may be employed. For example, the core bars **88** may be provided with ink depositing tips which simply mark the paper. Obviously it would be a very simple matter to feed a supply of ink or the like through the core bars, if desired. Moreover, this invention contemplates the use of a slave unit having a single impression forming device, such as a solenoid, which is movable into a variety of different positions adjacent said sheet in response to operation of the manually operable buttons in the master unit.

It will be seen that the impression forming device can be a controllable beam of radiation, such as heat or light, which can be moved over the adjacent surface of the sheet in response to operation of the appropriate buttons in the master unit. The sheet or strip of material for receiving the impression may have a heat or light sensitive emulsion, respectively, on said surface thereof, which produces a visible mark where it is exposed to the beam. Thus, by operating the proper button in the master unit, the beam is focused upon, and thereby marks, a selected portion or point on the sensitized surface.

It will also be apparent that other types of mechanisms may be utilized for connecting the manually operable buttons **32** and **68** to the pins **48** or bars **68**, respectively, whereby the pins or bars are caused to penetrate or mark the card or paper in response to operation of said buttons. Accordingly, although particular preferred embodiments of the invention have been disclosed herein for illustrative purposes, it will be understood that variations or modifications of such disclosure, which do depart from the scope of the appended claims, are fully contemplated.

What is claimed is:

1. An apparatus for recording on an impression receiving member the positions of a plurality of objects comprising:

a unit support structure;

a plurality of spaced indicia means, identifying a plurality of objects separate from the apparatus, mounted upon said support structure and arranged in a group of substantially adjacent locations;

a plurality of manually operable, actuating elements mounted upon said support structure in predetermined and respective association with said indicia means;

an impression receiving member having markings on a side thereof arranged in a pattern corresponding to the relative positions of said objects;

holding means for positioning the impression receiving member upon said support structure;

impression effecting means mounted adjacent said holding means for applying impressions in selected positions to said impression receiving member while said member is positioned within said holding means; and

connecting means between said actuating elements and said impression effecting means whereby operation of an actuating element causes said impression effecting means to make an impression upon an impression receiving member in said holding means at the markings on said impression receiving member corresponding to the objects identified on the operated actuating elements.

2. An apparatus for recording the positions of a plurality of objects, comprising:

a unit support structure having a plurality of indicia identifying a plurality of objects separate from the apparatus mounted upon said support structure and arranged in a group of spaced locations;

a plurality of manually operable, actuating elements mounted upon said support structure and respectively positioned adjacent said plurality of locations;

an impression receiving sheet having markings on a surface thereof, said markings being arranged in a pattern corresponding to the relative positions of said objects;

sheet positioning means mounted upon said support structure for holding a said sheet;

a plurality of laterally and longitudinally spaced impression effecting means mounted adjacent said sheet positioning means for applying impressions in selected positions to a sheet in said positioning means; and

connecting means between said actuating elements and said impression effecting means whereby manual operation of a said actuating element causes said impression effecting means to apply an impression in a predetermined position with respect to said markings, corresponding to the objects identified on the operated actuating elements, on a said impression receiving sheet held in said sheet positioning means.

3. An apparatus for recording upon a sheet the positions of a plurality of objects, comprising:

a unit support structure having a plurality of indicia identifying a plurality of objects separate from the apparatus mounted upon one side of said support structure and arranged in a group of spaced locations;

a plurality of manually operable, actuating elements mounted upon said support structure and respectively positioned adjacent said plurality of locations;

an impression receiving sheet having markings on one side thereof arranged in a pattern corresponding to the relative positions of said objects;

a sheet holding device mounted upon said support structure near said group of spaced locations for removably receiving said sheet and holding same in a selected fixed position;

a plurality of laterally and longitudinally spaced impression forming means mounted upon said support structure adjacent said sheet holding device for producing similar impressions upon said impression receiving sheet while said sheet is disposed in said fixed position within said sheet holding device; and

connecting means between said actuating elements and said impression forming means, whereby manual operation of said actuating elements causes said impression forming means to produce impressions on said impression receiving sheet at the said markings on said sheet, when said sheet is in said fixed position corresponding to the objects identified on the operated actuating elements.

4. The structure of claim 3 wherein said impression forming means includes a plurality of impression forming members supported in a battery adjacent said sheet holding device, said forming members being individually and respectively connected by said connecting means to said actuating elements; and

wherein said actuating elements are independently and simultaneously operable for producing said impressions on said impression receiving sheet.

5. A machine for recording the positions of plurality of objects upon an impression receiving sheet, comprising:

a unit support structure including a panel having a plurality of spaced, indicia bearing locations arranged in a group upon said panel in a predetermined pattern, and a plurality of indicia in said indicia

bearing locations identifying a plurality of objects separate from the apparatus;

a plurality of manually operable actuating members mounted upon said support structure near said locations in predetermined and respective association with said locations;

an impression receiving sheet having markings on one side thereof arranged in a pattern corresponding to the relative positions of said objects;

a sheet holding device mounted upon said support structure near said panel for removably receiving and supporting a said sheet;

a plurality of impression forming members mounted upon said support structure adjacent said sheet supporting device for applying impressions in a plurality of locations upon a sheet disposed within said sheet supporting device; and

means connecting said actuating members to said impression forming members, whereby manual operation of an actuating member causes a selected impression forming member to apply an impression in a predetermined location upon a said sheet held in said device, said predetermined location corresponding to the location of said object on said sheet corresponding to the object identified on the operated actuating member.

6. The structure of claim 5 wherein said connecting means includes a plurality of elongated flexible elements movably and respectively disposed within a plurality of elongated flexible sleeves extending between said panel and said sheet holding device, each element being connected at one end to one of said actuating members and at its other end to one of said impression forming members.

7. The structure of claim 5 wherein said connecting means includes:

a plurality of normally open, electrical switches, one switch being associated with and operable by each of said actuating members;

a source of electrical potential;

a plurality of solenoids mounted adjacent said sheet supporting device, each of said solenoids being electrically connected in series with one of said switches and said source of electrical energy for energizing said solenoid, each solenoid having core means movable in response to closure of a said switch for effecting an impression upon a said sheet held in said device.

8. The structure of claim 5 wherein said sheet holding device has a sheet receiving slot and a plurality of spaced openings communicating with said slot in a predetermined pattern;

wherein each impression forming member has an element slidably disposed within one of said openings in said sheet holding device for engaging said sheet and forming an impression thereon; and

wherein said impression forming members are mechanically and respectively connected to said actuating members on said panel.

9. The structure of claim 5 including means for supporting a roll of sheet material adjacent said sheet holding device, said device having a slot therethrough for slidably receiving and guiding said sheet material;

wherein said sheet holding device has a plurality of uniformly arranged openings communicating with said slot, and each impression forming member has an element slidably disposed within one of said openings and engageable with the portion of said sheet material in said holding device; and

including sheet engaging mechanism for advancing said sheet through said sheet holding device in a predetermined amount, and shear means for severing said predetermined amount of sheet material from the roll thereof in response to a portion of the movement of said sheet advancing means.

10. An apparatus for making a record upon a small sheet which can be carried away from said apparatus the positions of a plurality of objects, comprising:

a frame structure having wall means;

plural and visible indicia means, identifying a plurality of objects separate from the apparatus, mounted upon said wall means in a predetermined arrangement;

a plurality of manually operable members movably mounted upon said wall means in association with said plural indicia means;

an impression receiving sheet having plural markings on one side thereof arranged in substantially the same pattern as the relative positions of said plurality of objects;

a sheet holding device mounted upon said support structure near said operable members for removably receiving said impression receiving sheet and holding same in a selected position;

a plurality of impression forming elements, one forming element being associated with each of said operable members, said forming elements being laterally and longitudinally spaced from each other and being arranged for cooperation with said sheet holding device for producing similar impressions upon said impression receiving sheet in response to actuation of said operable members while said sheet is disposed in said position within said sheet holding device, the location of each impression being adjacent the indicia identified by the impression;

manually operable members operated when the sheet is within said sheet holding device; and

means on said frame structure for retaining a supply of impression receiving sheets.

11. An apparatus for marking on a card the positions of a plurality of items which may be located at different places in a building, such as food products in a supermarket, comprising:

a casing having a front wall;

a plurality of openings through said front wall and arranged in a preselected pattern thereon;

indicia holding means adjacent each of said openings adapted for holding indicia identifying the items whose position can be marked;

a sleeve member extending through each of said openings and secured to said front wall;

an elongated flexible cable snugly, but slidably, disposed within each of said sleeves and extending through the associated opening in said front wall;

a manually engageable button secured to the end of each cable in front of said front wall;

resilient means disposed between each of said buttons and said front wall for urging said button away from said front wall but permitting manual movement of said button toward said front wall to thereby effect lengthwise movement of its associated cable;

a card holding device mounted on said front wall and having a card-receiving slot extending substantially parallel with said front wall, said card holding device having a plurality of spaced openings extending rearwardly from said slot, said openings in said card holding device being equal in number to the number of cables extending through openings in the front wall of said casing and being arranged in a preselected pattern related to a pattern appearing on the cards adapted to be placed in said slot, said slot having guide and stop surfaces for precisely locating a card in a predetermined position with respect to the openings in said card holding device;

guide means mounted in each of said openings in said card holding device;

card marking means on the other end of each cable, each cable being snugly but slidably received into and extending through one of said guide means and

its associated opening in said card holding device, whereby movement of said button on each of said cables toward said front wall causes the card marking means of said cable to move frontwardly into said slot to mark a card received in said slot at a selected location on said card to indicate the position of an item; and

means for limiting movement of said buttons away from said front wall so that the card marking ends of said cables are continuously received within said guide means.

References Cited in the file of this patent

UNITED STATES PATENTS

185,537	Howie	Dec. 19, 1876
261,195	Alderman	July 18, 1882
610,972	Powell	Sept. 20, 1898
927,805	Lake	July 13, 1909
2,247,905	Bryce	July 1, 1941
2,322,602	Terry	June 22, 1943
2,898,175	Rice et al.	Aug. 4, 1959

FOREIGN PATENTS

112,567	Great Britain	Jan. 17, 1918