(19) Europäisches Patentamt
European Patent Office
Office européen des brevets

(11) Publication number: **0 160 204 B1**

(12) # EUROPEAN PATENT SPECIFICATION

(45) Date of publication of patent specification: **04.09.91**

(51) Int. Cl.5: **G02B 5/04**, G02B 27/16

(21) Application number: **85103345.6**

(22) Date of filing: **22.03.85**

(54) **Adjustable optical wedge.**

(30) Priority: **02.05.84 US 606008**

(43) Date of publication of application:
06.11.85 Bulletin 85/45

(45) Publication of the grant of the patent:
04.09.91 Bulletin 91/36

(84) Designated Contracting States:
DE FR GB

(56) References cited:
FR-A- 2 412 133
US-A- 3 253 525
US-A- 3 663 087
US-A- 3 884 548
US-A- 3 985 425

PATENT ABSTRACTS OF JAPAN, vol. 8, no. 92 (P-271)[1529], 27th April 1984; & JP-A-59 07 903 (FUJITSU K.K.) 17-01-1984

(73) Proprietor: **International Business Machines Corporation**
Old Orchard Road
Armonk, N.Y. 10504(US)

(72) Inventor: **Cohen, Donald Kenneth**
3255 N. Country Club No. 5
Tucson Arizona 85716(US)
Inventor: **Yardy, Raymond**
4100 N. Fernhill Circle
Tucson Arizona 85715(US)

(74) Representative: **Burt, Roger James, Dr.**
IBM United Kingdom Limited Intellectual Property Department Hursley Park
Winchester Hampshire SO21 2JN(GB)

EP 0 160 204 B1

Note: Within nine months from the publication of the mention of the grant of the European patent, any person may give notice to the European Patent Office of opposition to the European patent granted. Notice of opposition shall be filed in a written reasoned statement. It shall not be deemed to have been filed until the opposition fee has been paid (Art. 99(1) European patent convention).

Description

The present invention relates to optical systems particularly those optical systems usable with optical data recorders.

A lot of research and development activity has occurred for optical disk data recording wherein a laser system supplying a collimated light beam is employed for recording data and for reading data recorded from a rotating optical record disk. An expensive portion of such data recorders is in the optical light path which includes optical wedges, beam splitters, a focus detector and a data modulator and detector. It is therefore advantageous to have a simplified and facile manufacturing method of assembling such wedges and beam splitters into such optical systems. In particular, it is desirable to make as many adjustments as possible independent of any other adjustments during fabrication or maintenance.

Another aspect, particularly for optical data recorders, concerns the shape of the recording and read back light beam. Generally a collimated diode or semiconductive laser beam from a semiconductive or diode laser has an elliptical shape. Such a shape is not conducive to maximizing data storage densities on an optical disk; a circular beam is desired. Accordingly, it is another object of the invention to provide a simplified beam-shape converter which is provided in conjunction with the aforementioned object.

Optical wedges have been employed in various types of optical devices for many years. For example, Linder U. S. Patent 3,884,548, shows an optical wedge which transmits light to a mirror which in turn reflects the light at a given angle for stabilizing the optical system. According to the Linder patent, the optical wedge consists of a convex lens movably disposed in a concave cavity such that the two parts can be adjusted for changing the angle of the surfaces of the wedge. The light is transmitted first through the member having the concave cavity and then through the convex lens to the mirror. The wedge appears not to provide beam shaping nor is there any teachings to facilitate manufacturing such wedges.

Merkel, U. S. Patent 3,253,525, shows another optical wedge which does not change the shape of the beam. The wedge itself is constructed similarly to the Linder illustrated wedge, but provides for relative movement between an image source and a convex lens while maintaining the spatial relationship between the concave member and the source, i.e. the concave member moves with respect to a fixed planar-convex lens; in other words, the planar surface of the planar convex lens is always maintained parallel to a given surface such that for any movement of the concave member there is a continuous correction of the image viewed at the focal point of the planar-concave lens. In other words, the shape of what is being viewed is maintained.

French patent 897,795 (published March 30, 1945) shows a coin operated telescope with a variable optical wedge. The semicircular lens is rotated about a point which is the point of image input; this avoids any reflections from interfering with the viewing.

In accordance with the invention an adjustable or variable optical prism or wedge includes an optical input member having a semicircular shape. The semicircular shape can be either a hemicylinder or a hemisphere. The input member consists of transparent material exhibiting given optical properties typical of present-day quality optical glasses and including a given index of refraction. A semicircular convex-output surface of the input member has a given radius about a given point. The point lies on the input surface and the arrangement is such that the incident input light beam is centered on the given point; the input member is rotatable about that given point.

In movable contact with the input member is an optical transmitting member which has a concave semicircular cavity for slideably receiving the convex output surface; the cavity surface has the same radius circumscribing a circular area about the given point of said input member. The transmitting member has the same type of transparent material and optical properties as the input member. The transmitting member also has an output surface upon which a polarization sensitive coating resides for reflecting or deflecting light impinging on the coating while permitting transmission of light received by the input member and transmitted through the optical transmitting member.

A triangular wedge can be affixed to the polarization coating. It is preferred that the triangular wedge has the same optical properties as the other members in the variable wedge system. The variable wedge system is preferably employed in an optical disk data recording device. The assembly of the device includes incorporating the variable wedge system, which has a laser source mounted therewith, by first adjusting the input member within the semicircular cavity with respect to the laser source such that the output shape of the transmitted light is circular rather than elliptical. Then the triangular prism or the transmitting member is adjusted such that the light transmitted from the variable wedge system and the reflected wave impinging upon the polarization coating have a predetermined relationship to the recording member and an optical detector.

The foregoing and other objects, features, and advantages of the invention will be apparent from the following more particular description of a pre-

ferred embodiment of the invention, as illustrated in the accompanying drawings, where

Figure 1 illustrates an optical data recorder employing the present invention with an enlarged view of the variable wedge constructed in accordance with the present invention.

Figure 1A illustrates an adjustable mount for the laser-detector optics for the Figure 1 illustrated recorder.

Figures 2 and 3 diagrammatically illustrate two variations on the optical wedge assembly as shown in Figure 1.

Referring now more particularly to the drawing, like numbers indicate like parts and structural features in the various diagrams. An optical disk data recorder employing the present invention includes an optical record member 10, hereafter referred to as disk 10, mounted for rotation on a motor 11. Motor 11 in turn is fixed to a frame 19 of the peripheral data recorder. Disk 10 rotates in the direction of arrow 12 about an axis of rotation 13. The disk 10 may contain a single spiral track far receiving and storing data signals or may have a series of concentric tracks. In either arrangement event, double-headed arrow 15 represents the data recording area of disk 10.

Frame 19 also supports an actuator 20 which is coupled to head arm 21 by connecting rod 22. The arrangement is such that head arm 21 reciprocates radially with respect to disk 10, in a usual manner. Typically, head arm 21 may contain most of the optics and some of the electronics associated with the optical disk data recorder. For purposes of illustration, the size of the head arm 21 in Figure 1 is greatly enlarged with respect to the other elements of the optical disk data recorder. Collimated laser source 23, which includes a separate collimator and laser, can be mounted in the head arm as diagrammatically illustrated in the drawing. The collimated beam 30 impinges on variable wedge and beam splitter 24 (details later), passes through one-quarter wavelength plate 37 (Fig. 1A) travels along path 33 through focusser 25 and then to optical disk 10. As shown in Fig. 1A, source 23, wedge and splitter 24 and detector 36 are preferably mounted on intermediate frame 24A adjustably supported on arm 21 by machine screws 38.

For recording data on optical disk 10, the laser beam has a certain high energy well known in the optical disk recorder art. For sensing data stored on optical disk 10, the laser beam has a lower energy level, as is known. In either instance, some of the energy in the laser beam impinging on disk 10 is reflected to focusser 25, then along path 34 through one-quarter wavelength plate 37 and back to wedge 24. As is known, wedge 24 deflects the reflected beam to detector 36. Detector 36 can be used for focus control, track following and data detection for either read-after-write or read-only operations. The construction of detector 36 can follow the usual practices and hence is not described in detail for that reason.

Optical disk data recorder 10 includes electrical circuits 26 which not only control actuator 20 as indicated by line 26A, but also the laser in source 23 as indicated by line 26L and receives signals from the detector 36 as indicated by line 26D and controls motor 11 as indicated by line 26M. Electrical circuits 26 are also connected to external means (not shown), such as a host processor. These circuits also process data signals to be recorded on disk 10 or read from disk 10 in a usual manner.

Figure 1A includes an expanded showing of wedge-detector system 24. In system 24, variable optical wedge 32 receives the collimated elliptical (a two-to-one ratio ellipse, for example) beam 30 at an angle alpha with respect to reference line in head-arm assembly 21 and transmits the beam as a nominally circular (out-of-round ratio of about 1.1 to 1.0 may be expected) beam over path 33. The light beam reflected from disk 10 is received over path 34 and is deflected by wedge 32 over light path 35 to detector 36.

Wedge 32 includes a semicircular laser 23 beam receptor member 40 which receives the elliptical beam centered at its pivot point 39. Beam 30 has an elliptical shape 31 with a minor axis 31B aligned as shown and a major axis 31A. The minor axis 31B is parallel to the angle alpha on the receptor surface 40R of receptor member 40. Receptor member 40 is movably supported in outwardly opening semicircular concave cavity in light or optical transmitting member 41 such that it can be pivoted about pivot point 39. This pivoting changes the angle of incidence I of beam 30 with respect to the input surface of receptor member 40. An increase in the angle of incidence elongates the projection of minor axis 31B on the receptor surface. Since the major axis 31A extends parallel to the pivoting of receptor member 40, about pivot point 39, as will become apparent, its projected length on receptor surface 40R remains constant. Receptor member 40 refracts the input beam such that it is transmitted to path 33 through the transmitting member 41, polarization reflective coating 43 and one-quarter wavelength plate 37. Coating 43 is arranged such that the polarization of the input beam is passed with insubstantial reflection while the reflected beam on path 34 sees coating 43 as a mirror and therefore is deflected along path 35 to detector 36.

The variable wedge 32, detector 36 and laser source 23 are suitably mounted on adjustable plate 24A. Plate 24A is adjustably supported on head arm 21 by two or more machine screws 38. First

the collimated light source 23 input angle to the input surface of receptor member 40 is adjusted by pivoting the receptor member 40 about pivot point 39 within the cavity of member 41 for creating a circular beam to be transmitted toward path 33. After the described pivoting adjustment, the receptor surface has a fixed angle with respect to the reference line. This angle beta is selected so that the angle alpha causes input beam 30 to project a circular image on receptor surface 40R. Once this adjustment is made, receptor member 40 is suitably adhesively secured in the cavity to transmitting member 41. The adhesive can be inserted at 42 between the convex surface of receptor member 40 and the concave outwardly facing surface of the member 41 cavity and then cured once the adjustment is made. For example, using Norland 61 adhesive available from Morland Products, Inc. of New Brunswick, N. J., allows the adhesive to be used initially as a lubricant for facilitating the rotational adjustments. Then applying ultraviolet light to the adhesive cures it such that members 40 and 41 are fixably secured to each other. An advantage of the Norland 61 adhesive is that it is optically compatible with the transparent material used in members 40 and 41.

Once the laser source 23 and receptor member 40 are adjusted on plate 24A, the plate is mounted on arm 21 as diagrammatically shown in Fig. 1A. Plate 24A is then adjusted such that light paths 33, 34 are appropriately aligned such that light path 35 leads to detector 36 on plate 24A. Machine screws 38 are then tightened completing the assembly with two independent adjustments.

Accordingly, there is shown a simple constructional practice for assemblying a variable wedge into an optical disk data recorder and providing two independent adjustments during the fabrication process, the first being adjusting the angle of incidence between the center of beam 30 and the receptor member 40 input surface and the second adjusting relationships between beam 34 and detector 36.

Figures 2 and 3 show two implementations of the Figure 1 illustrated adjustable wedge 32. Figure 2 illustrates a hemicylinder 40C, which receives the elliptical input beam 30 on its receptor surface 40R such that the major axis 31A is parallel to the axis 40A of the hemicylinder. The projection of the elliptical beam 30 onto the receptor member 40C centered at pivot point 39 (location can be any place on axis 40A) is circular because of the angle of incidence alpha between the beam 30 and the planar input surface of receptor member 40.

Similarly in Figure 3, rather than hemicylinder 40C, a hemisphere 40S is the receptor member. Pivot point 39 is the center of hemisphere 40S. Hemisphere 40S is initially movably secured in the member 41A partial hemispherical 14 cavity about center input beam receiving point 39. After the described adjustment it is secured to member 41A as described in Fig. 1A. When using the hemisphere 40S rather than the hemicylinder 40C, an additional adjustment freedom is provided.

While the invention has been particularly shown and described with reference to a preferred embodiment thereof, it will be understood by those skilled in the art that various changes in form and details may be made therein without departing from the scope of the invention.

Claims

1. An adjustable optical prism, including in combination:

an optical input member (40) having a semicircular shape and consisting of transparent material exhibiting given optical properties including a given index of refraction and having a convex output surface with a center of radius about a given point (39) on an input surface, said input surface having a planar optical input portion at said center of radius;

an optical transmitting member (41) having a concave semicircular shaped cavity with a center of radius about the given point disposed out of said optical transmitting member for movably receiving said optical input member (40) such that said convex output surface engages said concave cavity for enabling said optical input member to pivot about said given point (39), optical output surface on said optical transmitting member facing away from said concave cavity, and said optical transmitting member consisting of said transparent material exhibiting said given optical properties;

a light polarization sensitive means (43) on said output surface of said optical transmitting member (41) for transmitting light having a given polarization and reflecting light having other than said given polarization such that light received through said optical input member may be transmitted along a first light path (33) extending from said output surface of said optical input member (40) through said optical transmitting member (41) and said light polarization sensitive means (43), and such that light transmitted along a second light path (34) oriented in the opposite direction with respect to said first light path is reflected by said light polarization sensitive means (43) along a third light path (35) angled with respect to said first and second light paths, and

a polarization adjusting member (37) disposed in optical coupling relationship to said output surface and in said first and second light paths for adjusting the polarization of impinging light and transmitting light transmitted from said optical input member and said optical transmitting member whereby adjustment of said optical input member with respect to said cavity adjusts the shape of any beam of light received thereon in accordance with the angle (I) of the perpendicular to said planar optical input portion with respect to the received beam of light (30).

2. An optical device including the adjustable optical prism set forth in claim 1, including in combination:

a first frame (24A) supporting said optical transmitting member (41) and said polarization adjusting member (37);

a light beam source (23) disposed on said first frame (24A) and having an output means for shining a light beam having a predetermined shape onto said planar optical input portion; and

means (42) interposed between said optical input member and said optical transmitting member to retain Said optical input member in said hemispheric shaped cavity such that said planar optical input portion is maintained at a predetermined angle (I) with respect to said output means light beam whereby the predetermined shape of said light beam is changed to a second shape as a function of said predetermined angle.

3. An optical device as set forth in claim 2 wherein said optical input member is a hemicylinder or a hemisphere.

4. An optical device as set forth in claim 2 further including an optical detector (36) mounted on said first frame (24A) in a position to intercept said reflected light from said light polarization sensitive means (43).

5. An optical device as set forth in claim 2 further including a second frame means (21) having adjustable mounting means (38) far mounting said first frame (24A) such that said optical input member (40) can be adjusted to said predetermined angle (I) for controllably adjusting beam shape before said first frame (24A) is adjustably mounted on said second frame means (21).

6. Optical data recorder having a record medium for storing optically sensible data in a predetermined format and shape including the features characterized in claims 1-5.

Revendications

1. Prisme optique réglable, comprenant en combinaison:

un élément d'entrée optique (40) de forme semi-circulaire et composé d'un matériau transparent présentant des propriétés optiques données comprenant un indice de réfraction donné et ayant une surface de sortie convexe avec un centre de convergence de rayon autour d'un point donné (39) sur une surface d'entrée, ladite surface d'entrée ayant une portion d'entrée optique plane audit centre de convergence de rayon;

un élément de transmission optique (41) ayant une cavité de forme semi-circulaire concave ayant un centre de convergence de rayon autour du point donné disposé hors dudit élément de transmission optique pour recevoir de façon mobile ledit élément d'entrée optique (40) de sorte que ladite surface de sortie convexe s'engage dans ladite cavité concave pour permettre audit élément d'entrée optique de pivoter autour dudit point donné (39), la surface de sortie optique dudit élément de transmission optique étant à l'opposé de ladite cavité concave, et ledit élément de transmission optique étant composé dudit matériau transparent présentant lesdites propriétés optiques données;

un moyen sensible à la polarisation de la lumière (43) sur ladite surface de sortie dudit élément de transmission optique (41) pour transmettre la lumière ayant une polarisation donnée et réfléchir la lumière dont la polarisation n'est pas ladite polarisation donnée de sorte que la lumière reçue dans ledit élément d'entrée optique puisse être transmise le long d'un premier trajet de lumière (33) allant de ladite surface de sortie dudit élément d'entrée optique (40), et traversant ledit élément de transmission optique (41) et ledit moyen sensible à la polarisation de la lumière (43), et de sorte que la lumière transmise le long d'un deuxième trajet optique (34) orienté dans la direction opposée à celle dudit premier trajet de lumière soit réfléchie par ledit moyen sensible à la polarisation de la lumière (43) le long d'un troisième trajet de lumière (35) faisant un angle avec lesdits premier et deuxième trajets de lumière; et

un élément de réglage de polarisation (37) disposé en relation de couplage optique avec ladite surface de sortie et dans lesdits premier et deuxième trajets de lumière pour régler la polarisation de la lumière incidente et de la lumière de transmission transmises à partir dudit élément d'entrée optique et dudit élément de transmission optique, ce qui fait que le réglage dudit élément d'entrée optique par rapport à ladite cavité règle la forme de tout faisceau de lumière reçue sur celle-ci suivant l'angle I de la perpendiculaire à ladite portion d'entrée optique plane avec le faisceau de lumière reçu (30).

2. Dispositif optique comprenant le prisme optique réglable selon la revendication 1, comprenant en combinaison:

un premier support (24A) portant ledit élément de transmission optique (41) et ledit élément de réglage de polarisation (37);

une source de faisceau de lumière (23) disposée sur ledit premier support (24A) et ayant un moyen de sortie pour éclairer ladite portion d'entrée optique plane d'un faisceau de lumière de forme prédéterminée ;et

un moyen (42) placé entre ledit élément d'entrée optique et ledit élément de transmission optique pour retenir ledit élément d'entrée optique dans ladite cavité hémisphérique de sorte que ladite portion d'entrée optique plane soit maintenue à un angle prédéterminé (I) avec le faisceau de lumière dudit moyen de sortie, permettant de ce fait de changer la forme prédéterminée dudit faisceau de lumière en une deuxième forme en fonction dudit angle prédéterminé.

3. Dispositif optique selon la revendication 2, dans lequel ledit élément d'entrée optique est un hémicylindre ou un hémisphère.

4. Dispositif optique selon la revendication 2, comprenant en outre un détecteur optique (36) monté sur ledit premier support (24A) dans une position pouvant intercepter ladite lumière réfléchie à partir dudit moyen sensible à la polarisation de la lumière (43).

5. Dispositif optique selon la revendication 2, comprenant en outre un deuxième moyen support (21) ayant un moyen de montage réglable (38) pour monter ledit premier support (24A) de sorte que ledit élément d'entrée optique (40) puisse être réglé suivant ledit angle prédéterminé (I) pour régler de façon contrôlable la forme du faisceau avant que ledit premier support (24A) ne soit monté de façon réglable sur ledit deuxième moyen support (21).

6. Enregistreur de données optiques ayant un moyen d'enregistrement pour emmagasiner des données optiquement sensibles suivant un format et une forme prédéterminés, ayant les caractéristiques énoncées dans les revendications 1-5.

Patentansprüche

1. Einstellbares optisches Prisma, das in Kombination aufweist:

ein optisches Eingangselement (40), das eine halbkreisförmige Gestalt besitzt und aus transparentem, vorgegebene optische Eigenschaften aufweisenden Material besteht, einen vorgegebenen Brechungsindex eingeschlossen, und welches eine konvexe Ausgangsfläche besitzt, deren Radius seinen Mittelpunkt bei einem vorgegebenen Punkt (39) an einer Eingangsfläche hat, wobei die Eingangsfläche bei dem Mittelpunkt des Radius einen ebenen optischen Eingangsabschnitt besitzt;

ein optisches Übertragungselement (41), das eine kokave, halbkreisförmig geformte Vertiefung besitzt, deren Radius seinen Mittelpunkt bei dem vorgegebenen, außerhalb des optischen Übertragungselementes gelegenen Punkt hat, um das optische Eingangselement (40) beweglich so aufzunehmen, daß die konvexe Ausgangsfläche an der konkaven Vertiefung anliegt und das optische Eingangselement um den gegebenen Punkt (39) verschwenken kann, wobei die optische Ausgangsfläche auf dem optischen Übertragungselement von der konkaven Vertiefung wegzeigt und das optische Übertragungselement aus dem genannten, transparenten, die vorgegebenen optischen Eigenschaften aufweisenden Material besteht;

ein auf Lichtpolarisierung ansprechendes Element (43) auf der Ausgangsfläche des optischen Übertragungselementes (41), um Licht mit einer vorgegebenen Polarisierung zu übertragen und Licht mit einer anderen als der vorgegebenen Polarisierung zu reflektieren, sodaß durch das optische Eingangselement empfangenes Licht längs eines ersten Lichtpfades (33) übertragen werden kann, der sich von der Ausgangsfläche des optischen Eingangselementes (40) durch das optische Übertragungselement (41) und das auf Lichtpolarisierung ansprechende Element (43) hindurcherstreckt, und daß längs eines zweiten, bezüglich des

ersten Lichtpfades entgegengesetzt gerichteten Lichtpfades (34) übertragenes Licht durch das auf Lichtpolarisierung ansprechende Element (43) längs eines dritten Lichtpfades (35) reflektiert wird, der bezüglich des ersten und zweiten Lichtpfades unter einem Winkel verläuft; und

ein Polarisierungseinstellelement (37), das in optisch kuppelnder Beziehung zu der Ausgangsfläche und in dem ersten und zweiten Lichtpfad angeordnet ist, um die Polarisierung von auftreffenden und von dem optischen Eingangselement und dem optischen Übertragungselement übertragenen Licht einzustellen, wobei ein Verstellen des optischen Eingangselementes bezüglich der Vertiefung die Form jedes von ihm empfangenen Lichtstrahles entsprechend dem Winkel (I) zwischen der Senkrechten auf dem ebenen, optischen Eingangsabschnitt und dem empfangenen Lichtstrahl (30) einstellt.

2. Optische Einrichtung mit dem einstellbaren optischen Prisma nach Anspruch 1, die in Kombination aufweist:

einen ersten Rahmen (24A), der das optische Übertragungselement (41) und das Polarisierungseinstellelement (37) trägt;

eine Lichtstrahlquelle (23), die auf dem ersten Rahmen (24A) angeordnet ist und ein Ausgangsmittel zum Abstrahlen eines Lichtstrahles vorgegebener Form auf den ebenen, optischen Eingangsabschnitt aufweist; und

ein zwischen dem optischen Eingangselement und dem optischen Übertragungselement vorgesehenes Mittel (42), um das optische Eingangselement in der hemisphärisch geformten Vertiefung so zurückzuhalten, daß der ebene, optische Eingangsabschnitt unter einem vorgegebenen Winkel (I) bezüglich des Ausgangsmittel-Lichtstrahles gehalten wird, wodurch die vorgegebene Form des Lichtstrahles als Funktion des vorgegebenen Winkels in eine zweite Form geändert wird.

3. Optische Einrichtung nach Anspruch 2, bei welcher das optische Eingangselement ein Halbzylinder oder eine Halbkugel ist.

4. Optische Einrichtung nach Anspruch 2, die weiters einen optischen Detektor (36) besitzt, der auf dem ersten Rahmen (24A) in einer Lage befestigt ist, um das reflektierte Licht von dem auf Lichtpolarisierung ansprechenden Element (43) aufzufangen.

5. Optische Einrichtung nach Anspruch 2, die weiters ein zweites Rahmenmittel (21) besitzt, die justierbare Montagemittel (38) zur Montage des ersten Rahmens (24A) aufweist, sodaß das optische Eingangselement (40) auf den vorgegebenen Winkel (I) eingestellt werden kann, um die Strahlform steuerbar einzustellen, bevor der erste Rahmen (24A) einstellbar auf dem zweiten Rahmenmittel (21) montiert wird.

6. Optischer Datenaufzeichner mit einem Aufzeichnungsmedium zum Aufzeichnen optisch erfaßbarer Daten in vorgegebenem Format und Gestalt, der die in den Ansprüchen 1 bis 5 gekennzeichneten Merkmale enthält.

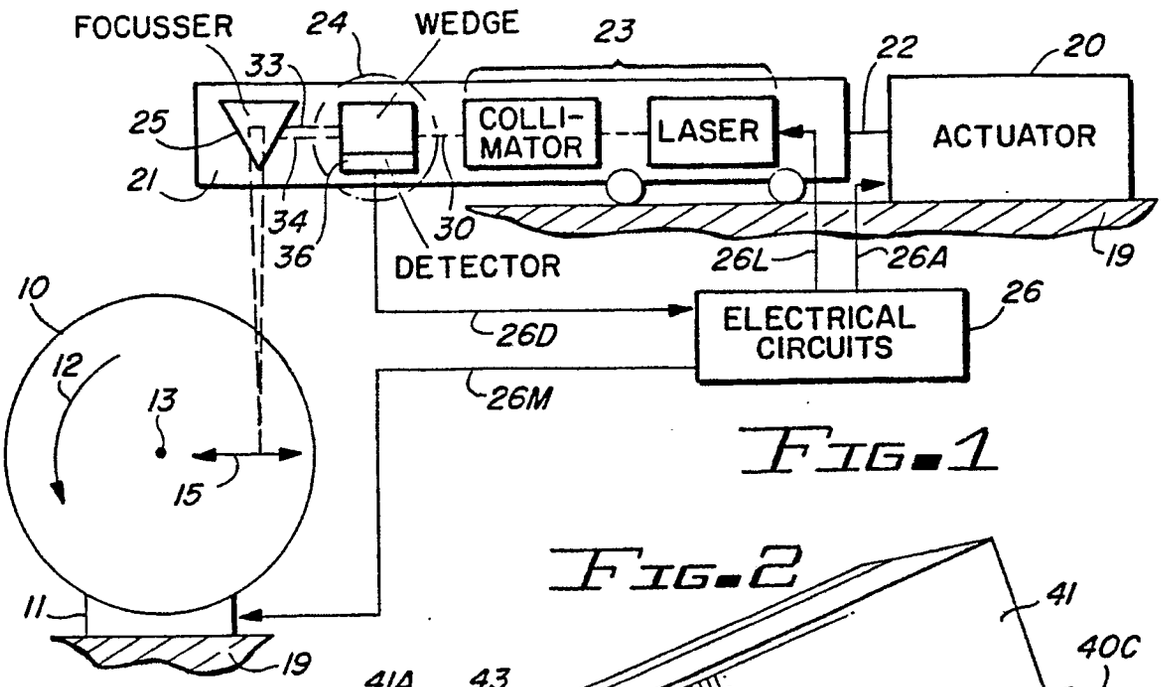

FIG-1

FIG-2

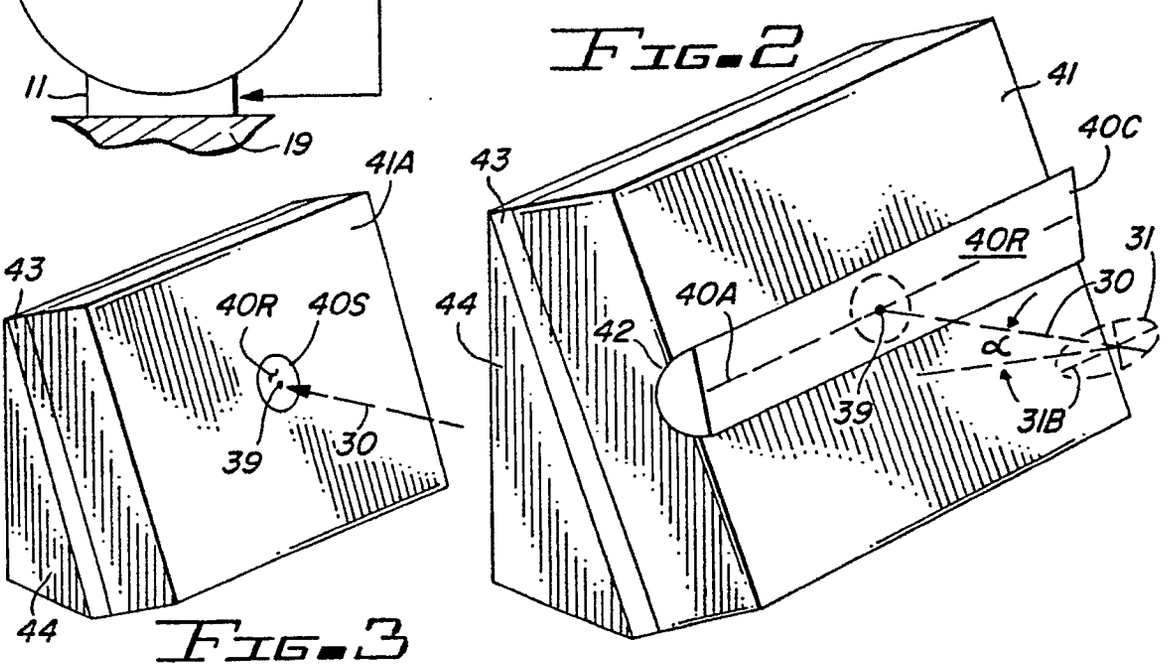

FIG-3

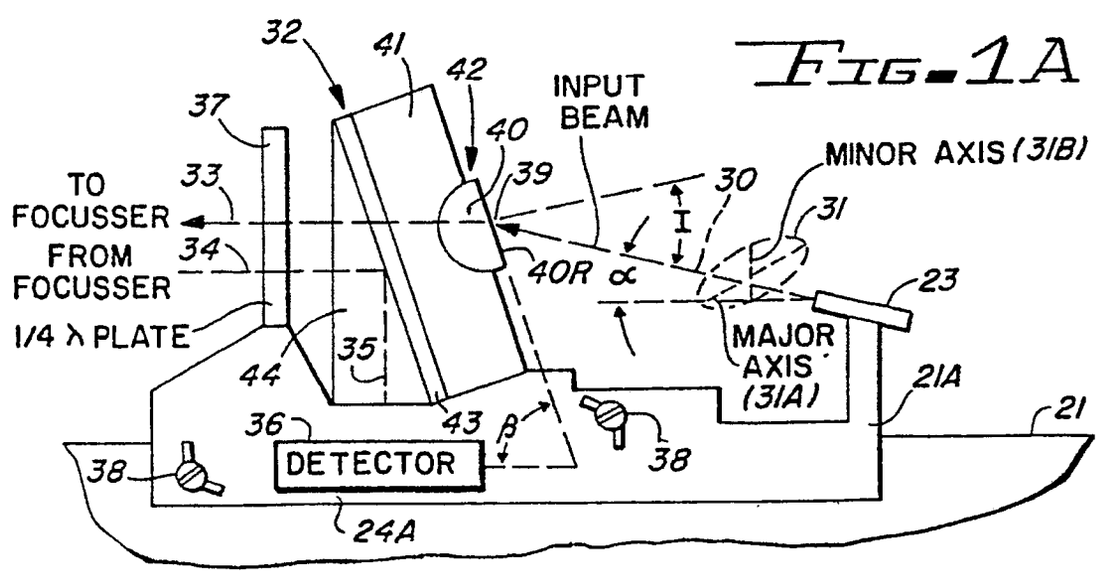

FIG-1A