June 10, 1952 H. K. DUNNING 2,599,980

HYDRAULIC DREDGING MACHINE

Filed Jan. 25, 1947 2 SHEETS—SHEET 1

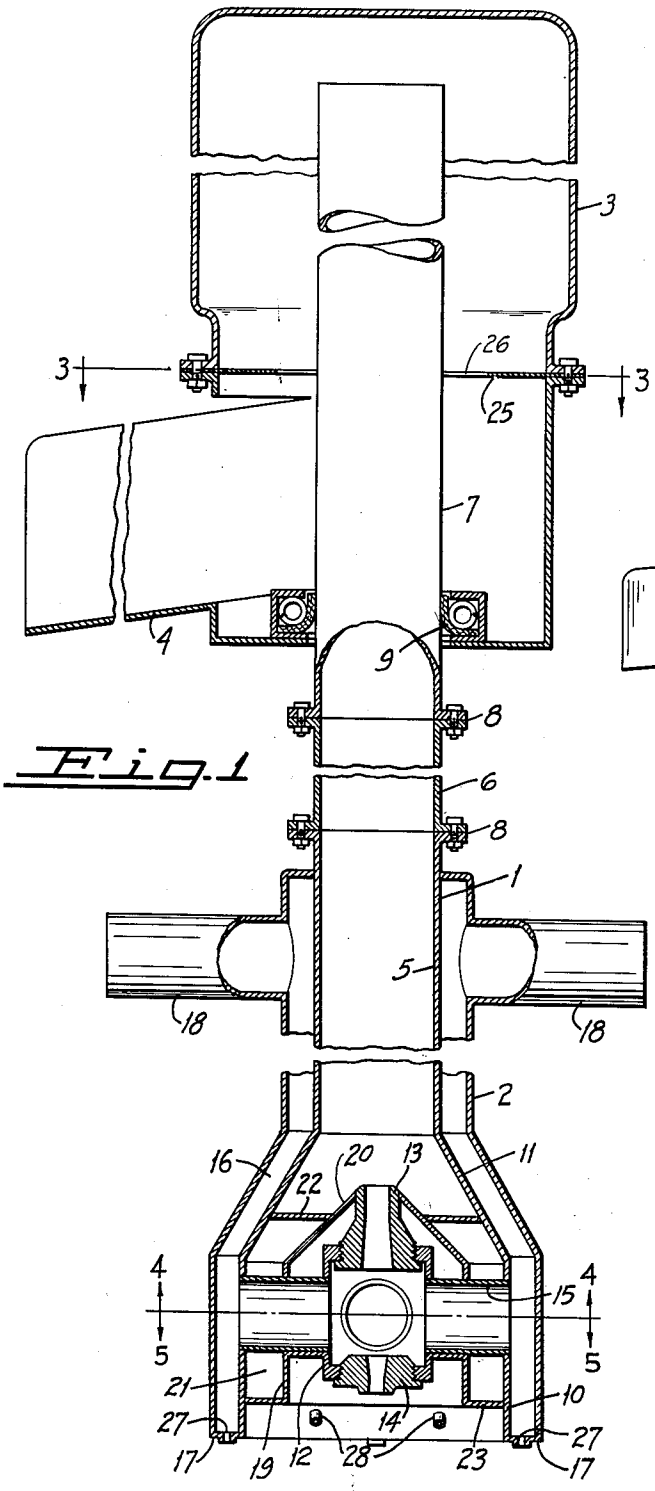

Fig. 1

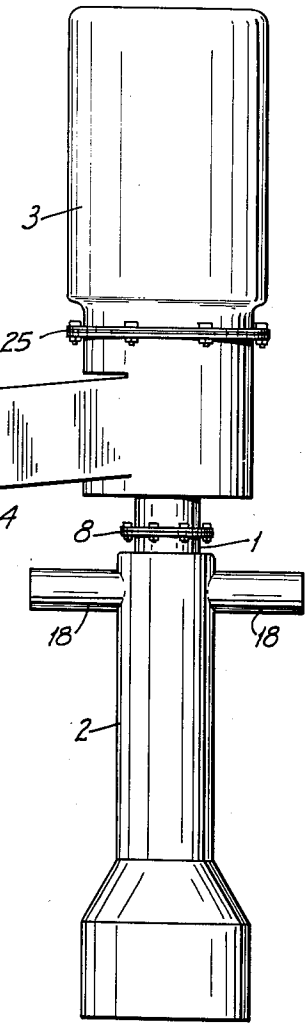

Fig. 2

INVENTOR.
HOMER K. DUNNING
BY
A. Schapp
ATTORNEY

June 10, 1952 H. K. DUNNING 2,599,980

HYDRAULIC DREDGING MACHINE

Filed Jan. 25, 1947 2 SHEETS—SHEET 2

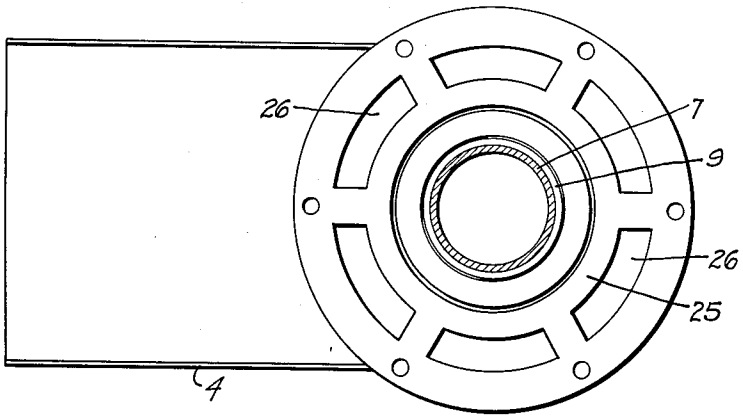

Fig. 3

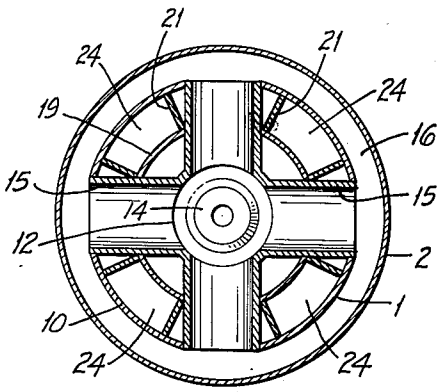

Fig. 5

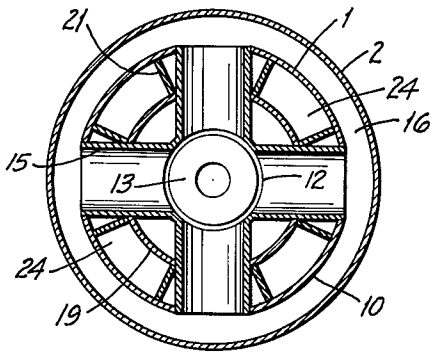

Fig. 4

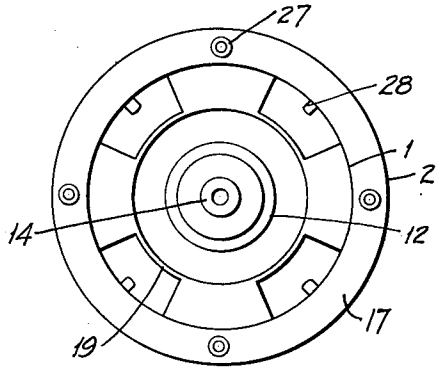

Fig. 6

INVENTOR.
HOMER K. DUNNING
BY A. Shapp
ATTORNEY

Patented June 10, 1952

2,599,980

UNITED STATES PATENT OFFICE

2,599,980

HYDRAULIC DREDGING MACHINE

Homer K. Dunning, San Francisco, Calif., assignor of one-half to Oscar Thomas McShane, San Francisco, Calif.

Application January 25, 1947, Serial No. 724,279

6 Claims. (Cl. 37—62)

1

The present invention relates to improvements in hydraulic dredging machines and its principal object is to provide a convenient machine for dredging alluvial deposits from submerged surfaces, as from the bottom of a pond, lake, river or the like.

It is particularly proposd for this purpose to utilize suction means for elevating and discharging deposits from the bottom of a submerged area in a continuous stream.

It is further proposed to utilize a jet of water discharged into the submerged lower portion of a tube in an upward direction for entraining water and solids from the submerged area for discharge through the upper end of the tube.

It is a further object of the invention to provide means for simultaneously disintegrating the alluvial deposits of the submerged area underneath the tube and to create a turbulent condition in the affected area whereby the solids are held in suspension and are more readily entrained in the water sucked through the tube.

It is particularly proposd to utilize for this purpose a jet of water directed downwardly for impinging upon the submerged earth deposits whereby the latter are disintegrated and mixed with the water in the area subject to the draft of the tube.

And finally, it is proposed to provide means in connection with the discharge end of the tube for arranging a discharge chute and for compensating for the rising and lowering of the tube to provide a substantially constant pressure head for different positions of the tube.

Further objects and advantages of my invention will appear as the specification proceeds, and the novel features of my invention will be fully defined in the claims attached hereto.

The preferred form of my invention is illustrated in the accompanying drawing, in which:

Figure 1 shows a vertical section through my hydraulic dredging machine, certain portions being broken away;

Figure 2, a side elevation of the same on a reduced scale;

Figure 3, a horizontal section taken along line 3—3 of Figure 1;

Figure 4, a horizontal section taken along line 4—4 of Figure 1;

Figure 5, a horizontal section taken along line 5—5 of Figure 1; and

Figure 6, a bottom plan view of the machine.

While I have shown only the preferred form of my invention, I wish to have it understood that various changes and modifications may be made

2

within the scope of the claims attached hereto without departing from the spirit of the invention.

Referring to the drawings in detail, my invention comprises in its principal features an inner tube 1, an outer tube 2 and a discharge head 3 having a discharge chute 4.

The inner tube 1 is here shown as being made of several sections 5, 6 and 7, the intermediate section 6 being interposed between the two other sections and secured thereto by bolted flanges 8. Any number of intermediate sections may be used to extend the overall length of the inner tube. It is desirable to use intermediate sections for extending the length of the tube because the lower section 5 is of specific construction and the upper section 7 should be well finished in its outer face to allow a flexible washer 9 to establish a watertight connection between the head 3 and the upper tube section.

In the usual arrangement of the machine, the head 3 may be considered as being mounted at a fixed elevation but with freedom of movement in a horizontal plane as, for instance, at the upper end of the boom of a dredger, while the inner tube is mounted with freedom of vertical sliding movement with respect to the head so that the tube may be raised and lowered for bringing the bottom end thereof into a desired position with respect to the bottom of the pond or lake in which the dredger operates.

The lower end of the inner tube section 5 terminates in an enlarged bell-shaped mouth 10 joined to the tube through a conical section 11 as shown.

A cylindrical chamber 12 is mounted concentrically inside of the mouth 10 of the inner tube and is provided with removable and replaceable nozzles 13 and 14, both being axially located, and the nozzle 13 pointing upward while the nozzle 14 points downward. The chamber is supported in part by 4 evenly spaced radial flues 15 which establish connection between the chamber and an outer passage 16 formed by the inner tube 1 and the outer tube 2. The lower end of this passage is closed, as shown at 17, so that when water under pressure is pumped through branch pipes 18 the water is forced down the annular passage 16 and through the flues 15 into the chamber 12 for discharge through the nozzles 13 and 14.

The flues 15 constitute natural barriers for water rising through the space between the chamber 12 and the mouth of the inner tube, but it is desirable to exactly control the area available for

the rising water with respect to the tube area, and in order to properly proportion the space allowed for the rising water I provide a cylindrical housing 19 around the chamber, the housing terminating in a tapered portion 20 at the upper end, substantially at the elevation of the tapered section 11 of the inner tube.

The annular space thus formed between the housing 19 and the inner tube is further reduced by providing partitions 21 on opposite sides of each flue 15, the partitions at each flue being joined by top members 22 and bottom members 23. Due to this construction only 4 passages 24 are left for the rising water, and the total cross-sectional area of these 4 passages should bear a definite relation to the cross-sectional area of the inner tube 1.

In establishing this relationship the object to be aimed at is to provide uniform speed for the rising water, and I find that this condition is substantially met by making the total area of the 4 passages 24 approximately three-fourths of that of the tube 1, allowing one-fourth of the area of the tube to be taken up by the jet emanating from the nozzle 13.

The upper section 7 of the tube 1 is slidable in the bottom of the head 3 and the tube may be operated for raising and lowering the same in any suitable manner (not shown). For operating, the mouth of the tube is immersed into the body of water so as to bring the open end within operative proximity of the underlying bottom. Through suitable hose connections, not shown, water is pumped under pressure, into the branches 18, which serve to balance one another, and passes through the annular passage 16, the flues 15 and the chamber 12 into the nozzles 13 and 14 to be discharged from the latter at high velocity. The jet emanating from the lower nozzle 14 impinges upon the bottom of the pond, disintegrates the bottom material and sets up a general turbulence, causing the solids to rise and disperse through the water in the area underneath the mouth of the tube.

At the same time, water discharging through the upper nozzle 13 creates suction in the tube and entrains water and water-carried solids from underneath the mouth of the tube, the water and solids being discharged over the upper edge of the tube and upon the chute 4, which latter again discharges upon a suitable launder, not shown.

Since the tube 1 can be adjusted to various different heights, it is apparent that the working head, that is the distance between the water level and the upper end of the tube, varies with different positions of the tube. It is lowest when the tube is in its lowermost position, that is, with its upper end approximately opposite the bottom of the chute, and highest when the tube is in its uppermost working position, approximately as shown in the drawing.

It is proposed, however, to compensate for these changes in the working head by making the head 3 in the form of an inverted vessel, closed at its upper end, as shown, and by providing a separating disc 25 in the head above the chute, the disc being formed with openings 26 having an aggregate discharge area approximately equal to the cross-sectional area of the tube 1. Due to this construction the water and solids discharged over the upper end of the tube crowd out the air and completely fill the head 3, and descending on the outside of the tube produce a siphoning action sufficiently strong to compensate for the extra lift required by the raising of the tube within the head.

Thus the static pressure, that is, the pressure required for lifting the water and the solids from the level of the pond to the upper end of the tube, remains substantially constant for different positions of the tube.

The bottom 17 of the passage 16 is preferably provided with a plurality of downwardly projecting nozzles 27 which are used for auxiliary disintegrating jets, and additional inclined nozzles 28 are arranged in the lower end of the tube mouth, opposite the passages 24 to discharge jets of water across the entrances to the passages for intercepting and driving back solids too large to be accommodated in the passages.

In order to test the efficiency of my machine, and particularly that of the disintegrating jet, I have carried out a number of experiments, using a model made to the dimensions of the drawing, the inner tube 14'' long, working pressure 22 lbs. operating on submerged sea sands, for one hour periods, and arrived at the following figures:

1. Using the elevating jet (nozzle 13) only:

The consumption of the elevating jet, running free, was 1,620.95 lbs. Working on water only, the entrained water amounted to 5,009.5 lbs. Thus the proportion of the water emitted from the jet to the entrained water was 1:3.127, which accounts for the suggestion that the combined area of the passages 24 should be approximately three-fourths of that of the tube, allowing one-fourth for the jet.

Working on water and sand, the weight of the entrained sands was 756 lbs. and that of the entrained water 4,253.5, the percentage of solids carried in suspension being 17.75%.

2. Using both jets (nozzles 13 and 14):

The consumption of the lower jet was 635.84 lbs. Working on water only, the weight of the entrained water was 4,383.27 lbs., that is, 626.23 less than in the case where the elevating jet only was used. Working on sand and water, the weight of the entrained sand was 1,080 lbs. and that of the entrained water 3,303.27 lbs. making the percentage of solids carried in suspension 32.3%.

Thus the use of the disintegrating jet added 324 lbs. of sand to the discharge and raised the percentage of solids carried in suspension from 17.75% to 32.3%.

I claim:

1. In a hydraulic dredging machine of the character described, a tube having a mouth at one end adapted for immersion into a pond or the like, a chamber inside the mouth and having axially disposed nozzles pointing in opposite directions, a second tube surrounding the first tube and the mouth so as to form an annular passage therewith, and conduit connections in the mouth between the passage and the chamber for guiding water under pressure into the latter for discharge through the nozzles, the mouth having an annular series of passages leading from the bottom of the mouth to the tube.

2. In a hydraulic dredging machine of the character described, a tube having a mouth at one end adapted for immersion into a pond or the like, a chamber inside the mouth and having axially disposed nozzles pointing in opposite directions, a second tube surrounding the first tube and the mouth so as to form an annular passage therewith, and conduit connections in the mouth between the passage and the chamber for guiding water under pressure into the latter for dis-

charge through the nozzles, the mouth having an annular series of passages leading from the bottom of the mouth to the tube, the annular passage between the two tubes being closed and having discharge nozzles intersecting the annular series of passages.

3. In a hydraulic dredging machine of the character described, a tube having a mouth at one end adapted for immersion into a pond or the like, a chamber inside the mouth and having axially disposed nozzles pointing in opposite directions, conduit connections in the mouth between the wall of the latter and the chamber, and means for guiding water under pressure through the conduit connections into the chamber for discharge through the nozzles, the mouth having an annular series of restricted passages leading from the bottom of the mouth to the tube, and the water guiding means having discharge nozzles intersecting the annular series of passages.

4. In a hydraulic dredging machine of the character described, a tube having a mouth at one end adapted for immersion into a pond or the like, a chamber inside the mouth and having axially disposed nozzles pointing in opposite directions, conduit connections in the mouth between the wall of the latter and the chamber, and means for guiding water under pressure through the conduit connections into the chamber for discharge through the nozzles, the conduit connections being arranged radially with respect to the mouth of the tube so as to leave passages between the same, and the water guiding means having discharge nozzles below said passages so as to intersect the latter.

5. In a hydraulic dredging machine, a vessel having a reduced opening in the bottom thereof and having a lateral discharge near the bottom, and a tube having an upper end vertically slidable in the opening and having suction means at its lower end adapted to draw material from

below a water level for discharge through the tube into the vessel, the upper end of the vessel being closed to produce a siphon effect adapted to compensate for a lifting of the tube in the vessel in maintaining a substantially constant pressure head for different positions of the tube.

6. In a hydraulic dredging machine, a vessel having a reduced opening in the bottom thereof and having a lateral discharge near the bottom, and a tube having an upper end vertically slidable in the opening and having suction means at its lower end adapted to draw material from below a water level for discharge through the tube into the vessel, the upper end of the vessel being closed to produce a siphon effect adapted to compensate for a lifting of the tube in the vessel in maintaining a substantially constant pressure head for different positions of the tube, and the vessel having a diaphragm stretched across the same immediately above the lateral discharge with a central opening therein through which the tube may pass, the effective area of the diaphragm opening outside the tube being approximately the same as that of the inside of the tube.

HOMER K. DUNNING.

REFERENCES CITED

The following references are of record in the file of this patent:

UNITED STATES PATENTS

Number	Name	Date
105,056	Eads	July 5, 1870
811,275	Cole	Jan. 30, 1906
821,670	Parker	May 29, 1906
2,125,740	Schacht	Aug. 2, 1938
2,413,561	Hehr	Dec. 31, 1946

FOREIGN PATENTS

Number	Country	Date
1,264	Germany	Oct. 20, 1877