(Model.)

J. H. SNYDER.

Horseshoe Machine.

No. 231,113. Patented Aug. 10, 1880.

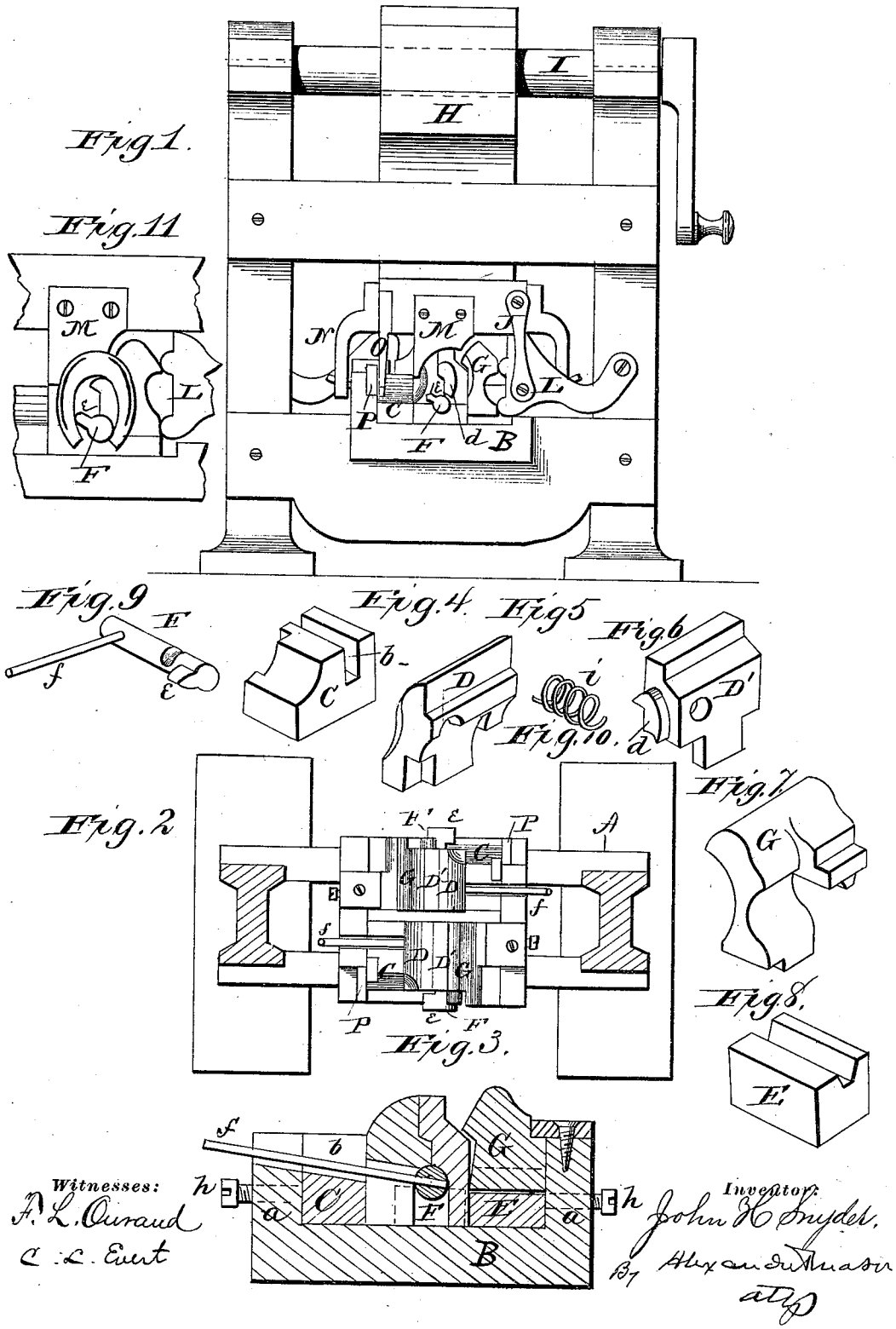

Witnesses:
A. L. Ouraud
C. L. Ewert

Inventor:
John H. Snyder,
By Alexander Mason
Atty

N. PETERS, PHOTO-LITHOGRAPHER, WASHINGTON, D. C.

UNITED STATES PATENT OFFICE.

JOHN H. SNYDER, OF RICHMOND, VIRGINIA.

HORSESHOE-MACHINE.

SPECIFICATION forming part of Letters Patent No. 231,113, dated August 10, 1880.

Application filed January 13, 1880.

To all whom it may concern:

Be it known that I, JOHN H. SNYDER, of Richmond, in the county of Henrico, and in the State of Virginia, have invented certain new and useful Improvements in Horseshoe-Machines; and I do hereby declare that the following is a full, clear, and exact description thereof, reference being had to the accompanying drawings, and to the letters of reference marked thereon, making a part of this specification.

The nature of my invention consists in the construction and arrangement of a machine for straightening defective machine-made horseshoes, as will be hereinafter more fully set forth.

In order to enable others skilled in the art to which my invention appertains to make and use the same, I will now proceed to describe its construction and operation, referring to the annexed drawings, in which—

Figure 1 is a front elevation of my machine. Fig. 2 is a horizontal section, showing a plan view of the bed with devices thereon. Fig. 3 is a longitudinal section of the bed and its devices. Figs. 4 to 11 are detailed views of parts thereof.

A represents the frame of the machine, constructed in any suitable manner to receive the working parts. In the frame A is the bed B, provided with side flanges, *a a*, between which the operating devices are placed.

In the drawings I have shown the machine made with two sets of operating devices, one on each side; but as these are exactly alike, a description of one will answer for both.

On the bed B, against one of the flanges *a*, is placed a block, C, formed with an inclined groove, *b*, from the top, of suitable depth, as shown. Next to this block is placed an anvil made in two parts, D D′, the part D′ being on its front face provided with a former, *d*, of such shape that one side of the horseshoe will fit over the same.

The anvil is made in two parts simply for convenience, so that a shaft, F, may be passed through the same, or rather that the two parts may be fitted over the shaft. This shaft F is at its forward end provided with a side cam or projection, *e*, and it has also a rod, *f*, which passes through a slot in the part D of the anvil and lies in the groove *b* of the block C. The end of this rod passes through and projects beyond a continuation of the groove *b*, made in the flange *a*, as shown in Fig. 3. A block, E, is then placed on the bed, between the anvil and the other side flange *a*, and over this block is fitted a jaw, G, the forward end of which is to correspond in shape with the former *d*, to clamp the shoe. Between this jaw and the anvil, in a suitable recess, is inserted a spring, *i*, to throw the jaw open.

By means of set-screws *h h*, passing through the side flanges, *a a*, and bearing against the blocks C and E, the various devices may be properly adjusted and held in place.

In the top of the frame A is a shaft, I, with an eccentric on which works a head or plunger, H, so that by the revolution of the shaft it will receive a vertically-reciprocating motion. To the head or plunger H is pivoted a link, J, which connects with an eccentric lever, L, having one end pivoted to the frame and the other end bearing against the jaw G.

M is a die secured to the head H and constructed as shown in Fig. 1. N is an arm also attached to the head, and through a hole in which the rod *f* is passed. On the head is, further, a knife, O, to act in conjunction with a similar knife, P, on the bed B. It will, of course, be understood that there are two sets of these devices on the head, to correspond with the two sets of devices on the bed.

In bending horseshoe-blanks by machinery it very often happens that the shoes are not bent exactly in the center. The object of my machine is to make such defective shoes as good as those which are not defective. The longer end of the defective shoe is first cut off by the knives O P when the head H makes a downward stroke. When the head is raised the shoe is placed over the former *d*, and as the head descends again the lever L is thrown against the jaw G, and holds the same sufficiently tight to clamp one side of the shoe to the former. The arm N at the same time depresses the rod *f*, which turns the shaft F, so that the cam *e* will press on the inside of the free end of the shoe, thus preventing any contraction of the heel of the shoe. The die M then strikes the shoe a little to one side of the center, and as it completes its downward stroke

it draws the shoe over toward the free end, completing the shoe just the same as if it had originally been bent exactly in the center. As the head ascends again the spring *i* opens the jaw G, and the cam *e* is also relieved, so that the shoe can be taken off from the former.

Having thus fully described my invention, what I claim as new, and desire to secure by Letters Patent, is—

1. In a machine for equalizing the sides of defective horseshoes, the clamping-jaw G, eccentric lever L, connecting-link J, and reciprocating head H, in combination with the anvil D D′, provided with the stationary former *d*, substantially as and for the purposes herein set forth.

2. The shaft F, provided with the cam *e* and rod *f*, in combination with the head H and arm N, substantially as and for the purposes herein set forth.

3. The die M, attached to the reciprocating head H, in combination with the former *d*, clamping-jaw G, and holding-cam *e*, substantially as and for the purposes herein set forth.

4. An improved machine for equalizing the sides of defective horseshoes, consisting essentially of the following elements, viz: a former and clamping-jaw for holding one side of the shoe, a device for preventing contraction at the heel, and a die for drawing over the metal from one side to the other, substantially as herein set forth.

In testimony that I claim the foregoing I have hereunto set my hand this 9th day of January, 1880.

JOHN H. SNYDER.

Witnesses:
H. AUBREY TOULMIN,
H. J. ENNIS.