PCT WORLD INTELLECTUAL PROPERTY ORGANIZATION
International Bureau

INTERNATIONAL APPLICATION PUBLISHED UNDER THE PATENT COOPERATION TREATY (PCT)

(51) International Patent Classification 5 : A41J 31/00

A1

(11) International Publication Number: WO 94/21147

(43) International Publication Date: 29 September 1994 (29.09.94)

(21) International Application Number: PCT/GB93/01187

(22) International Filing Date: 4 June 1993 (04.06.93)

(30) Priority Data:
9306254.5 25 March 1993 (25.03.93) GB

(71) Applicant *(for all designated States except US)*: DOLPHIN WATER SHOPS LIMITED [GB/GB]; The Manor House, Middle Street, Beeston, Nottingham NG9 1FX (GB).

(72) Inventor; and

(75) Inventor/Applicant *(for US only)*: WALKER, David, Macallister [GB/GB]; 3 Hewston Close, Barrow-upon-Soar, Leicestershire LE12 8NB (GB).

(74) Agent: DEALTRY, Brian; Eric Potter Clarkson, St Mary's Court, St Mary's Gate, Nottingham NG1 1LE (GB).

(81) Designated States: AT, AU, BB, BG, BR, BY, CA, CH, CZ, DE, DK, ES, FI, GB, HU, JP, KP, KR, KZ, LK, LU, MG, MN, MW, NL, NO, NZ, PL, RO, RU, SD, SE, SK, UA, US, VN, European patent (AT, BE, CH, DE, DK, ES, FR, GB, GR, IE, IT, LU, MC, NL, PT, SE), OAPI patent (BF, BJ, CF, CG, CI, CM, GA, GN, ML, MR, NE, SN, TD, TG).

Published
With international search report.

(54) Title: INSTANT HOT WATER DISPENSER

(57) Abstract

An instant hot water dispenser comprises a storage tank (39) for containing a reservoir of hot water, heating means (42) for maintaining the hot water at a predetermined temperature, a selectively operable discharge means (44) associated with the tank (39) having an outlet (22d) for connection with a remote discharge nozzle (11). The discharge means (44) when operated is arranged to feed water from the reservoir through said outlet (22d) to the discharge nozzle (11), the dispenser being arranged to permit water to drain from the discharge nozzle (11) into the reservoir when the discharge means (44) is not operated. The discharge means (44) is located relative to the tank (39) such that water contained within the discharge means (44) when not operated is maintained at said predetermined temperature.

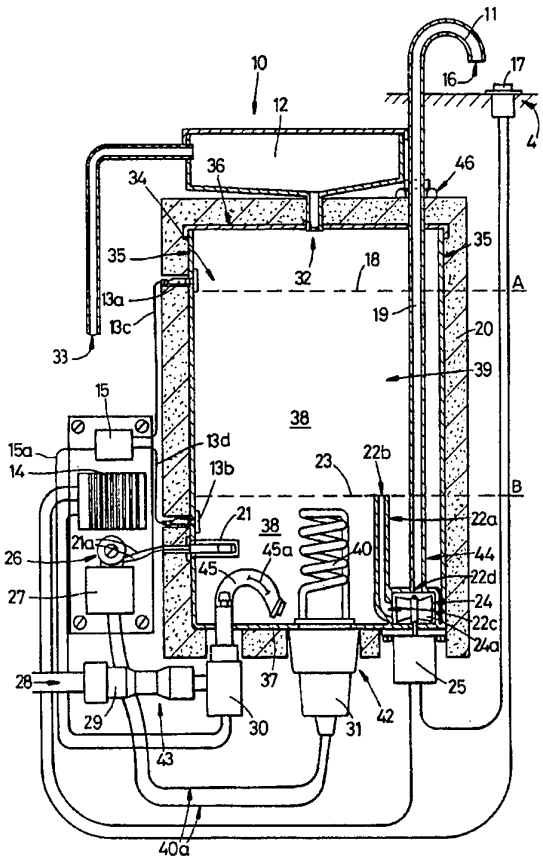

FOR THE PURPOSES OF INFORMATION ONLY

Codes used to identify States party to the PCT on the front pages of pamphlets publishing international applications under the PCT.

AT	Austria	**GB**	United Kingdom	**MR**	Mauritania
AU	Australia	**GE**	Georgia	**MW**	Malawi
BB	Barbados	**GN**	Guinea	**NE**	Niger
BE	Belgium	**GR**	Greece	**NL**	Netherlands
BF	Burkina Faso	**HU**	Hungary	**NO**	Norway
BG	Bulgaria	**IE**	Ireland	**NZ**	New Zealand
BJ	Benin	**IT**	Italy	**PL**	Poland
BR	Brazil	**JP**	Japan	**PT**	Portugal
BY	Belarus	**KE**	Kenya	**RO**	Romania
CA	Canada	**KG**	Kyrgystan	**RU**	Russian Federation
CF	Central African Republic	**KP**	Democratic People's Republic of Korea	**SD**	Sudan
CG	Congo			**SE**	Sweden
CH	Switzerland	**KR**	Republic of Korea	**SI**	Slovenia
CI	Côte d'Ivoire	**KZ**	Kazakhstan	**SK**	Slovakia
CM	Cameroon	**LI**	Liechtenstein	**SN**	Senegal
CN	China	**LK**	Sri Lanka	**TD**	Chad
CS	Czechoslovakia	**LU**	Luxembourg	**TG**	Togo
CZ	Czech Republic	**LV**	Latvia	**TJ**	Tajikistan
DE	Germany	**MC**	Monaco	**TT**	Trinidad and Tobago
DK	Denmark	**MD**	Republic of Moldova	**UA**	Ukraine
ES	Spain	**MG**	Madagascar	**US**	United States of America
FI	Finland	**ML**	Mali	**UZ**	Uzbekistan
FR	France	**MN**	Mongolia	**VN**	Viet Nam
GA	Gabon				

INSTANT HOT WATER DISPENSER

The invention relates to an instant hot water dispenser particularly, although not exclusively, an instant hot water dispenser for dispensing instant hot water for preparing hot drinks, for example tea or coffee.

Water generally suitable for preparing hot drinks is normally heated to boiling point by means of a kettle and often the person preparing a hot drink will have to wait until water in the kettle has boiled before the drink can be prepared. Therefore hot water is not instantly available with this type of system.

According to one aspect of the present invention there is provided an instant hot water dispenser comprising a storage tank for containing a reservoir of hot water, heating means for maintaining the hot water at a predetermined temperature, a selectively operable discharge means associated with the tank having an outlet for connection with a remote discharge nozzle, the discharge means when operated being arranged to feed water from the reservoir through said outlet to the discharge nozzle, the dispenser being arranged to permit water to drain from the discharge nozzle into the reservoir when the discharge means is not operated, the discharge means being located relative to the tank such that water contained within the discharge means when not operated is maintained at said predetermined temperature.

Preferably the discharge means includes a submersible pump which communicates with said outlet.

Preferably said outlet is located above the level of the reservoir and is preferably connected to the submersible pump via a conduit which

passes through the reservoir.

Preferably an inlet to the discharge means is located at a predetermined level above the bottom of the tank in order to define a lower level of the reservoir created by extraction of water by the discharge means.

Preferably the discharge means allow free-running of water through the discharge means thus enabling unused water to drain back into the tank from the discharge nozzle when the discharge means is not in operation.

Preferably the tank is vented to allow water to drain back from the discharge nozzle when the discharge means is not operated.

Preferably venting of the tank is achieved through an outlet port in an upper part of the tank which preferably communicates with a condenser. The condenser may sit on top of the tank or be incorporated within it. Conveniently, at least the top of the condenser is corrugated or otherwise formed to maximise the surface area thereof.

Preferably the heating means comprises an electric heating element located below the lower level of the reservoir.

Various aspects of the present invention will hereinafter be described with reference to the accompanying drawings, in which:-

Figure 1 is a schematic diagram of an instant hot water dispenser; and

Figure 2 is a schematic diagram of an instant hot water dispenser according to a preferred embodiment of the present invention.

Referring to the drawings, there is shown an instant hot water dispenser 10 for heating water to a temperature suitable for the preparation of hot drinks which in the embodiment shown is located below a work surface/sink level.

The instant hot water dispenser 10 comprises a storage tank 39 moulded from a synthetic plastics material and defining a chamber 34 for containing a reservoir of hot water 38, heating means 42 for maintaining the hot water at a predetermined temperature, water supply means 43 for maintaining a readily available source of water to the storage tank 39, and selectively operable water discharge means 44 for removing hot water from the storage tank 39. The instant hot water dispenser 10 further comprises condensing chamber 12 for condensing steam from the storage tank 39 to be fed back as water, level sensors 13a,13b for detecting the level of water in the tank 39, and temperature sensor 21 with temperature controller 26 for measuring and controlling the temperature of water in the tank 39. The condensing chamber 12 also acts to vent the top of the storage tank 39 in a manner providing free passage of water into and out of the tank without interference by pressure or vacuum.

The instant hot water dispenser 10 has outer peripheral walls defined by a vertical cylindrical wall 35, base 37 and top 36. Preferably the outer walls of the storage tank 39 are surrounded by an insulating cladding 20 for example foamed plastics, providing economical running of the system by retaining heat within the chamber 34. The cylinder 35 may be of any convenient cross-sectional shape or size. For normal domestic use, it is envisaged that a storage tank 39 having a capacity of about 2 litres would be sufficient. The tank 39 may however have a capacity greater or less than 2 litres. The cylinder walls 35 are made from any suitable material such as plastics or a metal such as copper alloy.

Water is delivered to the storage tank 39 by the water supply means 43 having a water supply 28 terminating at an inlet of the storage tank 39. The water supply means 43 comprises a one-way valve 29 whose inlet is connected to the water supply 28 and an outlet connected to a solenoid operated valve 30. The solenoid valve 30 is preferably a coil type operating from a 12 volts source. The outlet of the solenoid valve 30 is connected to the inlet of the storage tank 39 preferably at the lowest position within the storage tank 39. The outlet of the solenoid valve 30 has a water distributor 45 in the form of a pipe internally located within the storage tank 39. This directs water into the tank through a slit 45a and preferably towards the heater element 40. The slit outlet 45a helps prevent build-up of scale which can get back to the valve 30 and block the same.

Hot water is discharged from the storage tank 39, on demand, by selectively operable discharge means 44 comprising a vertical discharge pipe 19 disposed within the chamber 34 of the storage tank 39 and being connected at a lower end to a submersible pump 24 and at the upper end to discharge nozzle 11.

The pump 24 is located at the base of the storage tank 39 having an inlet 22c and an outlet 22d. Pump inlet 22c is connected to a vertical pipe 22a whose inlet 22b draws water from a lower level B of water in the storage tank 39. The inlet 22b of pipe 22a is above the bottom of the storage tank 39 and defines the lower level B. The inlet 22b of pipe 22a and lower level B of the storage tank 39 are positioned above the heater element 40 such that the water is never allowed to fall below heater element 40 thus ensuring that the element is always fully immersed in water.

The outlet 22d of the submersible pump 24 is connected to the lower end of vertical discharge pipe 19 also located internally to the storage tank 39. The opposite end of the vertical discharge pipe 19 exits the top wall 36 of storage tank 39 through an outlet defined by a coupling 46 which forms an in-line communication passage through to the discharge nozzle 11. At the terminal end of the discharge nozzle 11 is the discharge pipe outlet 16.

A zone of water 38a surrounding the heater element 40 is defined by the volume of water contained under the lower level B in the storage tank 39.

The pump 24 preferably operates by means of a 12 volt motor 25 externally located at the base of the storage tank 39. The discharge of water is selectively operable by initiating a switch 17 that, in one state, causes the motor 25 to operate and hence turn the pump 24 to draw hot water from the volume of water 38a in the storage tank 39 through the intake 22b of inlet pipe 22a. Preferably the switch 17 is operated from a 12 volt supply. A discharge of hot water is forced up the discharge pipe 19 by initiating pump 24 and issues from the outlet 16 of the discharge nozzle 11 of discharge pipe 19. When the pump 24 is deactivated by operating switch 17 changing over to a second state the residue water remaining in the vertical discharge pipe 19 is allowed to drain back into the storage tank 39 by the venting at the top of the tank. Upon draining back into the storage tank 39 the water in the discharge means will assume the same level as the level of the water in the storage tank 39. The water remaining in the vertical discharge pipe 19 located inside storage tank 39 will thus be maintained at the same temperature as the water in the reservoir by conduction. This ensures that water in the discharge means

is maintained at the storage tank water temperature such that when the discharge means 44 is operated, instant hot water at the desired temperature is immediately discharged through the nozzle. Preferably the 12 volts distributed to the solenoid valve 30, pump motor 25 and switch 17 are supplied from a 12 volt isolating transformer 14.

With the instant hot water dispenser 10 situated at a concealed location below the surface of a worktop/sink 41 the switch 17 and the outlet of the discharge pipe 19 may reside at an accessible location above the worktop 41.

The heater element 40 is preferably a 240 volt a.c. coil type electric element of 2.8kw having a thermal overload cut-out switch 31 located in the head of the heater element 40. The heater element 40 is mounted on the central base 37 of the tank so as to be located below the inlet of the discharge means. Accordingly, if the tank is emptied to lower level B by the discharge means 44 the heater element 40 will always remain under water. In the event of the level dropping lower than lower level B the thermal overload cut-out switch 31 will prevent the heater element 40 from burning out. The heater element 40 is connected to a relay 29 by means of a pair of electrically conducting wires 40a.

A temperature controller 26 receives a temperature change signal by means of a pair of electrically conducting wires 21a the signal corresponding to the water temperature being sensed by temperature sensor 21. The temperature controller 26 is preferably an adjustable thermostat, but any other means may be used such as a resistance thermometer (thermistor) or a thermocouple. The water temperature set is dependent upon the desired requirement of the dispenser. For hot drinks, the temperature is preferably set in excess of 80°C, more

preferably in excess of 90°C.

The temperature sensor 21 in the embodiment shown extends outward from the vertical side wall 35 of the storage tank 39 adjacent to, and occupying substantially the same zone of water 38a as, the heater element 40. Also adjacent to and occupying substantially the same zone of water 38a as the heater element 40 and the temperature sensor 21 is the pump 24 inlet pipe 22a.

Substantially towards the top of the storage tank 39 is a upper storage tank water level A and disposed between levels A and B are the level sensors 13a,13b respectively. The storage tank level sensors 13a,13b are situated in the vertical side wall 35 of the storage tank 39. The lower level sensor 13b is positioned above the temperature sensor 21 within the same zone 38a and at a lower distal region of lower level B. The upper level sensor is positioned within an upper distal region of upper level A.

The level sensors 13a,13b are electrically connected by wires 13c,13d to a level controller 15. The level controller 15 is electrically connected by wires 15a to the solenoid valve 30 in-line with the mains water inlet pipe 28.

When the water 38 demanded by pump 24 is caused to drop below level A the upper sensor 13a sends a signal to open the solenoid valve 30 via level controller 15. This open signal causes mains water to flow into inlet pipe 28 and replenish the storage tank 39 to maintain the correct upper level A. When the correct upper level A is reached the upper level sensor 13a causes the solenoid valve 30 to shut thus cutting the water supply off to the storage tank 39 at this desired level.

Located on the storage tank top 36 is the condensing chamber 12 moulded from a synthetic plastics material and having a water vapour/steam inlet pipe 32 and a vent pipe 33 which allows the tank to vent thereby providing an open system.

The condensing chamber 12 receives steam from inside the chamber 34 through an inlet pipe 32. The steam therein condenses and runs back down into the chamber 34. The vent pipe 33 not only allows the tank to breath as an open tank system but also serves as an overflow in the event of the solenoid 30 failing to shut off flow.

The condensing chamber 12 is preferably absent of any lagging or cladding as cooling the steam and condensing it to water to be received back into the tank would be greatly assisted by this feature.

Turning now to Figure 2 which shows a preferred embodiment of the invention. This is generally similar to that of Figure 1, whereby similar reference numerals have been used for like parts. The main difference between the embodiment of Figure 1 and the preferred embodiment of Figure 2 concerns the condensing chamber 12 which in the latter is incorporated within the top of the tank 39.

The tank 39 is moulded from a synthetic plastics material as before but has two portions of increased cross-section at its open end. A first portion 51 of increased cross section provides a lip 52 which forms a seat for the tank top 36 on which is disposed a layer insulating cladding 53 similar to the external cladding 20. A second portion 54 of increased cross section provides a further lip 55 which forms a seat for the condensing chamber 12, which again is moulded from a synthetic plastics

material and has the vapour/steam inlet pipe 32 and a vent pipe 33 as before. The inlet pipe 32 is curved at the end located within the tank 39, the curved end acting as a baffle 60 to prevent undue egress of vapour/steam from the tank and hence prevent undue cooling of the water within the tank.

The condensing chamber 12 is moulded with a boss 56 offset to one side of the chamber, which boss receives a metallic pipe 57 in the lower of which is disposed the temperature sensor 21. A further boss 58 is provided to receive the discharge pipe 19 to which is releasably fitted the discharge nozzle 11.

The condensing chamber 12 is provided with a lid 58, also of a synthetic plastics material, which is of corrugated form so as to maximise the surface area thereof and hence maximise the cooling rate of the vapour/steam within the body of the condensing chamber. The lid 58 is screwed onto the tank 39 at a number of points around the periphery thereof at which points bosses are provided to receive self-tapping screws, or which may be threaded to receive conventional screws. The lid is apertured to allow the through passage of the discharge pipe 19 and the pipe 57.

The vent pipe 33 fits into a socket 59 moulded into the one side chamber 12.

The heater 40 is a conventional 2.5kw heater, but may be a 2.8kw heater as before. The heater 40 is mounted in the side of the tank 39 as is the pump 25 which in this embodiment is mains operated. The 12 volt switch 17 operates a relay 61 on the circuit board 62 which relay connects mains power (not shown) to the pump 25.

The water distributor in the form of the pipe 45 has one end connected to the solenoid valve 30 as before, and the other end attached to the floor of the tank 39, the outlet for the water again being in the form of the slit 45a.

In this embodiment the two level sensors 13a and 13b operate in conjunction with an earthed electrode 13e. In both embodiments, the sensors 13a and 13b, and the electrode 13e in the preferred embodiment, may be in the form of metallic strips of different lengths and located in generally vertical channels of dovetail cross section moulded into the sides of the tank 39. This dispenses with the need to provide apertures in the side of the tank 39.

The preferred embodiment of Figure 2 operates in generally the same manner as that described in connection with the embodiment of Figure 1.

In both embodiments, the discharge nozzle 11 may be in the form of a tap having an operating mechanism, such as a lever, which as well as opening the tap, actuates a microswitch to energise the relay 61, thus dispensing with the switch 17.

CLAIMS

1. An instant hot water dispenser comprising a storage tank for containing a reservoir of hot water, heating means for maintaining the hot water at a predetermined temperature, a selectively operable discharge means associated with the tank having an outlet for connection with a remote discharge nozzle, the discharge means when operated being arranged to feed water from the reservoir through said outlet to the discharge nozzle, the dispenser being arranged to permit water to drain from the discharge nozzle into the reservoir when the discharge means is not operated, the discharge means being located relative to the tank such that water contained within the discharge means when not operated is maintained at said predetermined temperature.

2. An instant hot water dispenser according to claim 1, wherein the discharge means includes a submersible pump which communicates with said outlet.

3. An instant hot water dispenser according to claims 1 and 2, wherein said outlet is located above the level of the reservoir and is connected to the submersible pump via a conduit which passes through the reservoir.

4. An instant hot water dispenser according to claim 1, 2 or 3, wherein an inlet to the discharge means is located at a predetermined height above the bottom of the tank in order to define a lower level of the reservoir created by extraction of water by the discharge means.

5. An instant hot water dispenser according to any preceding claim, wherein an the discharge means allow free-running of water through the discharge means thus enabling water to drain back into the tank from the

discharge nozzle when the discharge means is not in operation.

6. An instant hot water dispenser according to any preceding claim, wherein the discharge nozzle is fitted with a tap having an operating mechanism and an electrical switch, the switch being operated to actuate the discharge when the tap is opened and to de-actuate the discharge means when the tap is closed.

7. An instant hot water dispenser according to any preceding claim, wherein the tank is vented to allow water to drain back from the discharge nozzle when the discharge means is not operated.

8. An instant hot water dispenser according to any preceding claim, wherein venting of the tank is achieved through an outlet port in an upper part of the tank.

9. An instant hot water dispenser according to claim 7, wherein the outlet port communicates with a condenser.

10. An instant hot water dispenser according to claim 9, wherein the condenser is incorporated in the tank.

11. An instant hot water dispenser according to claim 9 or 10, wherein the condenser is separated from the top of the tank by a layer of thermal insulation.

12. An instant hot water dispenser according to any of claims 9 to 11, wherein the condenser comprises a chamber fitted with a lid of corrguated formation.

13. An instant hot water dispenser according to claim 12, wherein the lid of the condenser also forms an overall lid for the tank.

14. An instant hot water dispenser according to claim 1, wherein the heating means comprises an electric heating element located below the lower level of the reservoir.

15. An instant hot water dispenser substantially as hereinbefore described with reference to the accompanying drawing.

1/2

Fig. 1

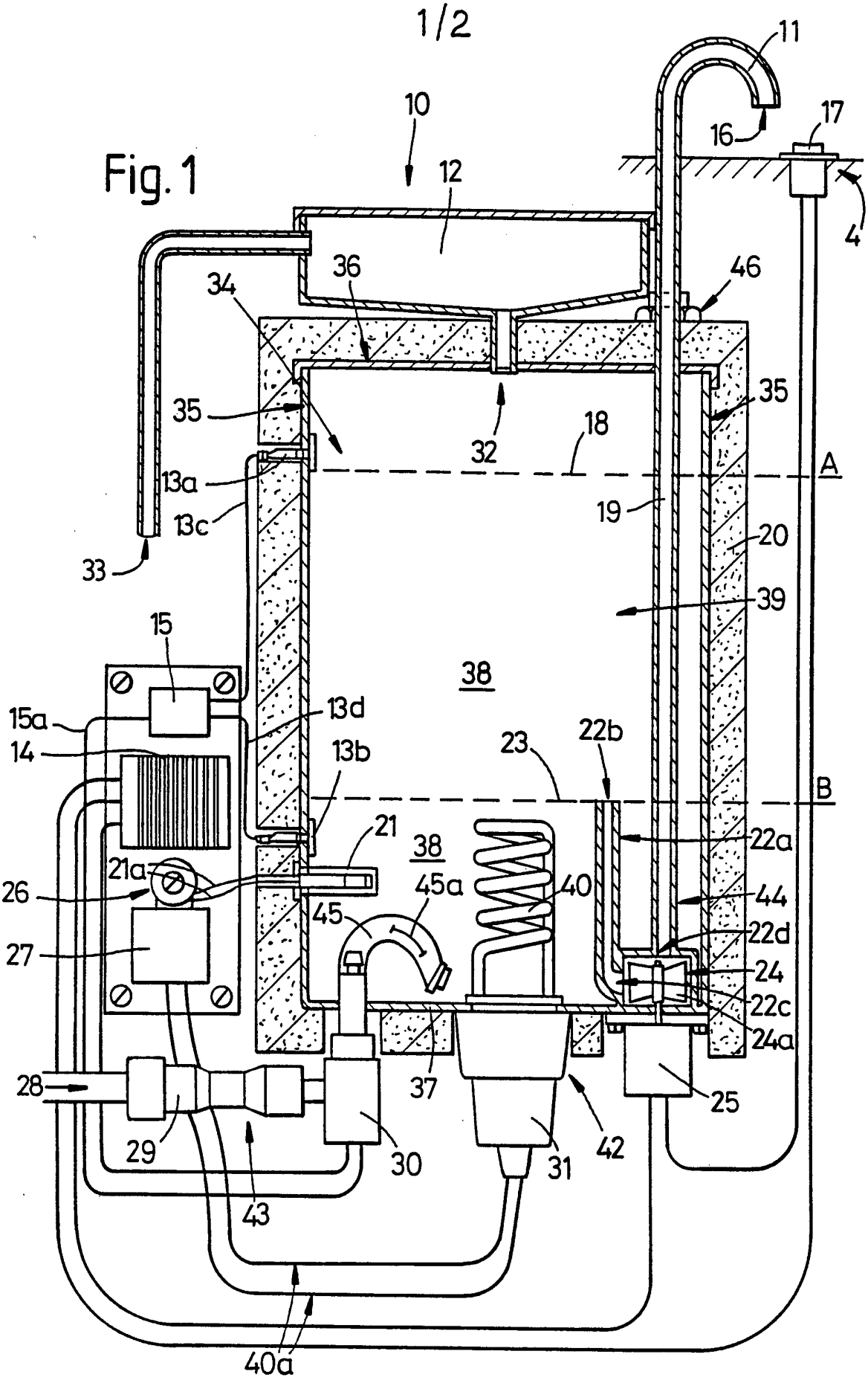
10
11
12
16
17
4
34
36
46
35
35
32
18
A
13a
13c
19
33
20
39
15
38
15a
13d
14
13b
23
22b
B
21
38
22a
21a
45a
40
44
26
45
22d
27
24
22c
24a
28
37
25
29
30
31
42
43
40a

Fig. 2

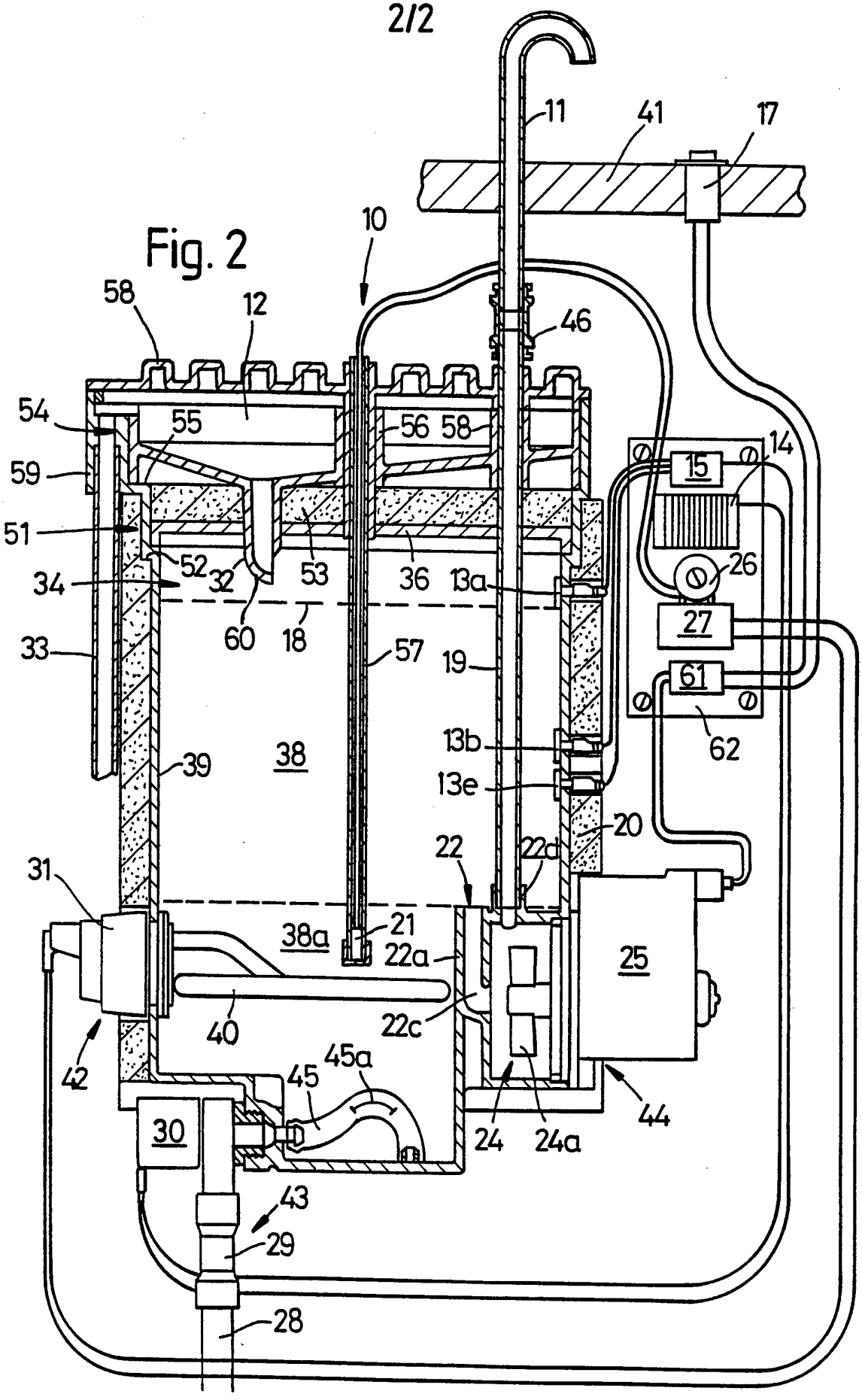
11
41
17
10
58
12
46
54
55
56
58
14
15
59
51
52
32
53
36
13a
26
34
27
60
18
57
19
33
61
62
13b
38
39
13e
20
22
22d
31
21
38a
22a
25
40
22c
42
45a
45
44
30
24
24a
43
29
28

INTERNATIONAL SEARCH REPORT

International Application No PCT/GB 93/01187

I. CLASSIFICATION OF SUBJECT MATTER (if several classification symbols apply, indicate all) [6]

According to International Patent Classification (IPC) or to both National Classification and IPC

IPC[5]: A 41 J 31/00

II. FIELDS SEARCHED

Minimum Documentation Searched [7]

Classification System	Classification Symbols
IPC[5]	A 41 J,F 24 H

Documentation Searched other than Minimum Documentation to the Extent that such Documents are included in the Fields Searched [8]

III. DOCUMENTS CONSIDERED TO BE RELEVANT [9]

Category [10]	Citation of Document, [11] with indication, where appropriate, of the relevant passages [12]	Relevant to Claim No. [13]
A	WO, A1, 90/07 898 (MR. COFFEE, INC.) 26 July 1990 (26.07.90), abstract. --	1
A	EP, A1, 0 279 782 (LÜKON FABRIK) 24 August 1988 (24.08.88), abstract. ----	1

* Special categories of cited documents: [14]

"A" document defining the general state of the art which is not considered to be of particular relevance

"E" earlier document but published on or after the international filing date

"L" document which may throw doubts on priority claim(s) or which is cited to establish the publication date of another citation or other special reason (as specified)

"O" document referring to an oral disclosure, use, exhibition or other means

"P" document published prior to the international filing date but later than the priority date claimed

"T" later document published after the international filing date or priority date and not in conflict with the application but cited to understand the principle or theory underlying the invention

"X" document of particular relevance; the claimed invention cannot be considered novel or cannot be considered to involve an inventive step

"Y" document of particular relevance; the claimed invention cannot be considered to involve an inventive step when the document is combined with one or more other such documents, such combination being obvious to a person skilled in the art.

"&" document member of the same patent family

IV. CERTIFICATION

Date of the Actual Completion of the International Search	Date of Mailing of this International Search Report
09 September 1993	18. 10. 93
International Searching Authority	**Signature of Authorized Officer**
EUROPEAN PATENT OFFICE	REIF e.h.

ANHANG — ANNEX — ANNEXE

zum internationalen Recherchenbericht über die internationale Patentanmeldung Nr.

to the International Search Report to the International Patent Application No.

au rapport de recherche international relatif á la demande de brevet international n°

PCT/GB 93/01187 SAE 74646

In diesem Anhang sind die Mitglieder der Patentfamilien der im obengenannten internationalen Recherchenbericht angeführten Patentdokumente angegeben. Diese Angaben dienen nur zur Unterrichtung und erfolgen ohne Gewähr.

This Annex lists the patent family members relating to the patent documents cited in the above-mentioned international search report. The Office is in no way liable for these particulars which are given merely for the purpose of information.

La présente annexe indique les membres de la famille de brevets relatifs aux documents de brevets cités dans le rapport de recherche international visée ci-dessus. Les reseignements fournis sont donnés á titre indicatif et n'engagent pas la responsibilité de l'Office.

Im Recherchenbericht angeführtes Patentdokument Patent document cited in search report Document de brevet cité dans le rapport de recherche	Datum der Veröffentlichung Publication date Date de publication	Mitglied(er) der Patentfamilie Patent family member(s) Membre(s) de la famille de brevets	Datum der Veröffentlichung Publication date Date de publication
WO A1 9007898	26-07-90	AU A1 50254/90	13-08-90
		AU B2 625112	02-07-92
		CA AA 2007947	17-07-90
		CA C 2007947	06-07-93
		EP A1 454770	06-11-91
		EP A4 454770	15-01-92
		JP T2 4502871	28-05-92
		US A 4882983	28-11-89
EP A1 279782	24-08-88	keine - none - rien	