United States Patent [19]

Marcus et al.

[11] **3,833,872**

[45] **Sept. 3, 1974**

[54] **MICROMINIATURE MONOLITHIC FERROCERAMIC TRANSFORMER**

[76] Inventors: **Ira R. Marcus,** 5004 Jasmine Dr., Rockville, Md. 20053; **William L. Muckelroy,** P.O. Box 9685, Washington, D.C. 20016

[22] Filed: **June 13, 1972**

[21] Appl. No.: **262,406**

[52] **U.S. Cl.** **336/83,** 336/183, 336/200, 336/232

[51] **Int. Cl.** **H01f 17/04**

[58] **Field of Search** ..... 336/83, 180, 200, 183, 336/232, 221; 340/174 CC, 174 JA

[56] **References Cited**

UNITED STATES PATENTS

2,966,704	1/1961	O'Brian et al.	336/221 X
3,040,301	6/1962	Howatt et al.	340/174 CC
3,058,078	10/1962	Hoh	336/83 X
3,185,947	5/1965	Freymodsson	336/200
3,247,573	4/1966	Noack	336/200 X
3,319,207	5/1967	Davis	336/221 X
3,333,334	8/1967	Kuliczkowski et al.	340/174 JA
3,400,455	9/1968	Cosgrove	340/174 CC
3,505,139	4/1970	Wentworth	340/174 JA
3,518,756	7/1970	Bennett et al.	336/200 X
3,543,196	11/1970	Berglund	336/200 X
3,554,797	1/1971	Coerver, Jr. et al.	336/83 X

FOREIGN PATENTS OR APPLICATIONS

993,265	5/1965	Great Britain	336/200

Primary Examiner—Thomas J. Kozma
Attorney, Agent, or Firm—Edward J. Kelly; Herbert Berl; Saul Elbaum

[57] **ABSTRACT**

A monolithic microminiature transformer element comprising at least two separate contiguous windings of conductive metal film, each having an interconnecting magnetically permeable core of refractory material, immersed in a rectangular block of stratified refractory material. The element is a contiguous mass of ceramic material, especially alumina, primary and secondary transformer windings formed by printing or photoetching loops on a rectangular piece of ceramic sheet. A method for making this transformer element wherein paths of conductive material are deposited onto thin unsintered magnetically permeable ceramic sheet with holes for interconnection therein to form windings of said transformer and wherein said holes are aligned and said sheets are laminated such that upon sintering said metal forms a contiguous conductive path and provides a primary or secondary winding for said transformer, and wherein said path is immersed in a contiguous block of ceramic.

11 Claims, 12 Drawing Figures

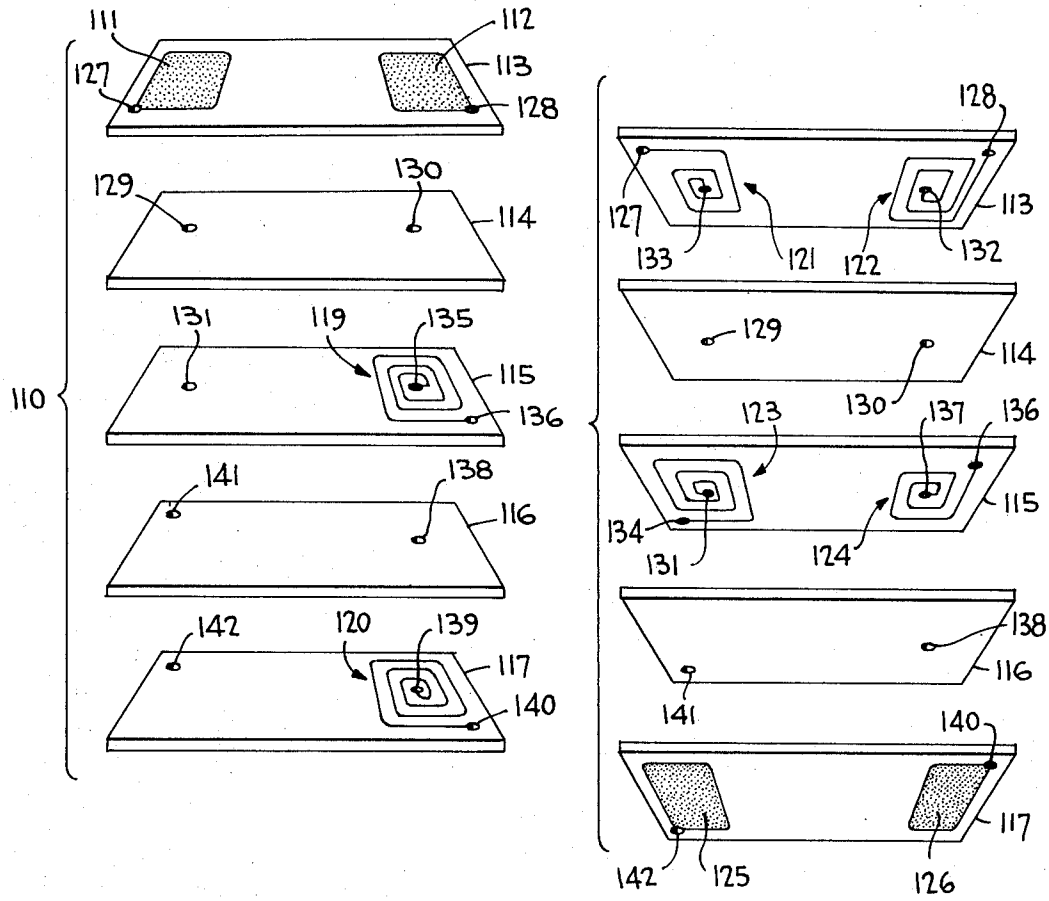

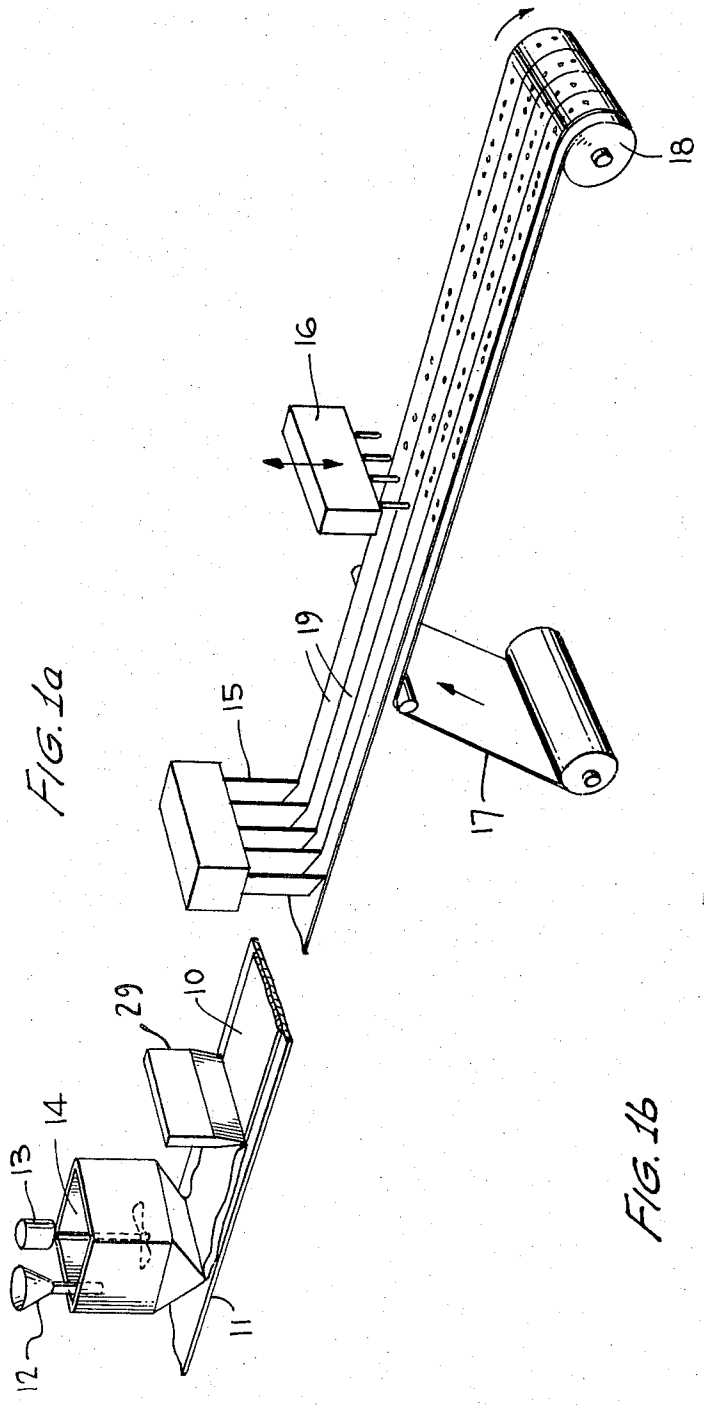
10
11
12
13
14
15
16
17
18
19
29

FIG. 1a

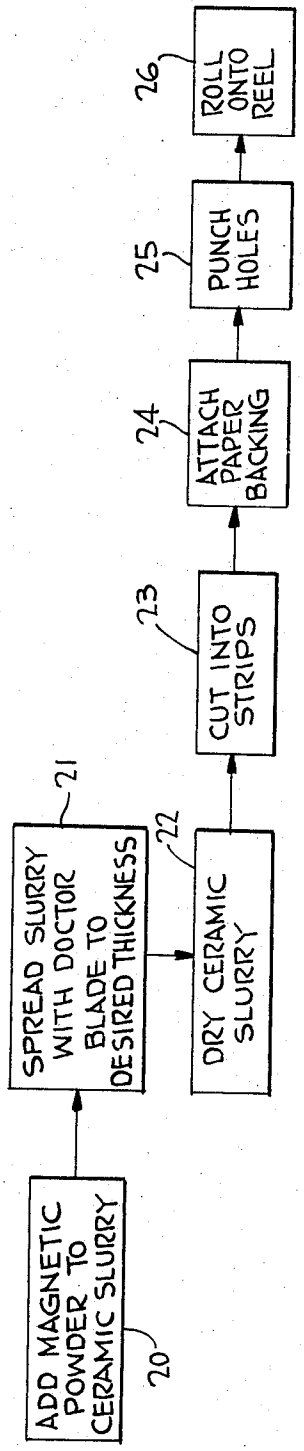
ADD MAGNETIC POWDER TO CERAMIC SLURRY
20
SPREAD SLURRY WITH DOCTOR BLADE TO DESIRED THICKNESS
21
DRY CERAMIC SLURRY
22
CUT INTO STRIPS
23
ATTACH PAPER BACKING
24
PUNCH HOLES
25
ROLL ONTO REEL
26

FIG. 1b

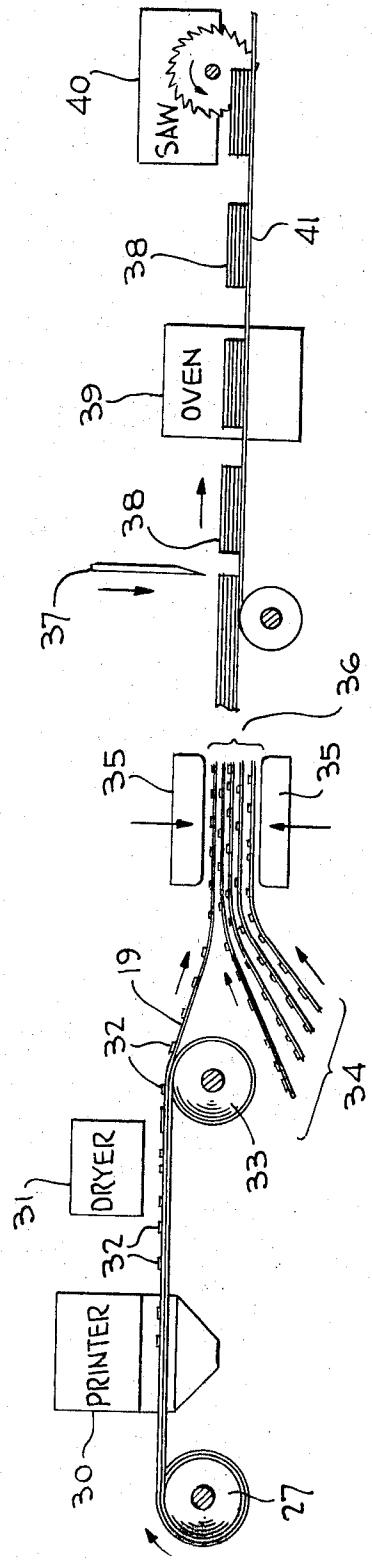
SAW
OVEN
DRYER
PRINTER
27
30
31
32
32
33
34
35
35
36
37
38
38
39
40
41
19

FIG. 2a

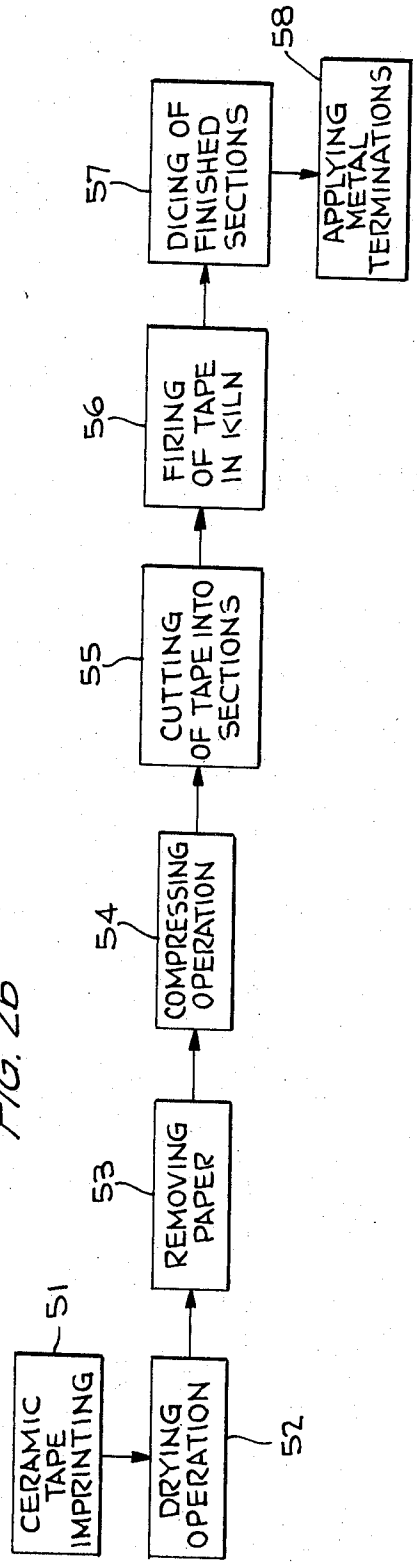
CERAMIC TAPE IMPRINTING
51
DRYING OPERATION
52
REMOVING PAPER
53
COMPRESSING OPERATION
54
CUTTING OF TAPE INTO SECTIONS
55
FIRING OF TAPE IN KILN
56
DICING OF FINISHED SECTIONS
57
APPLYING METAL TERMINATIONS
58

FIG. 2b

FIG. 3

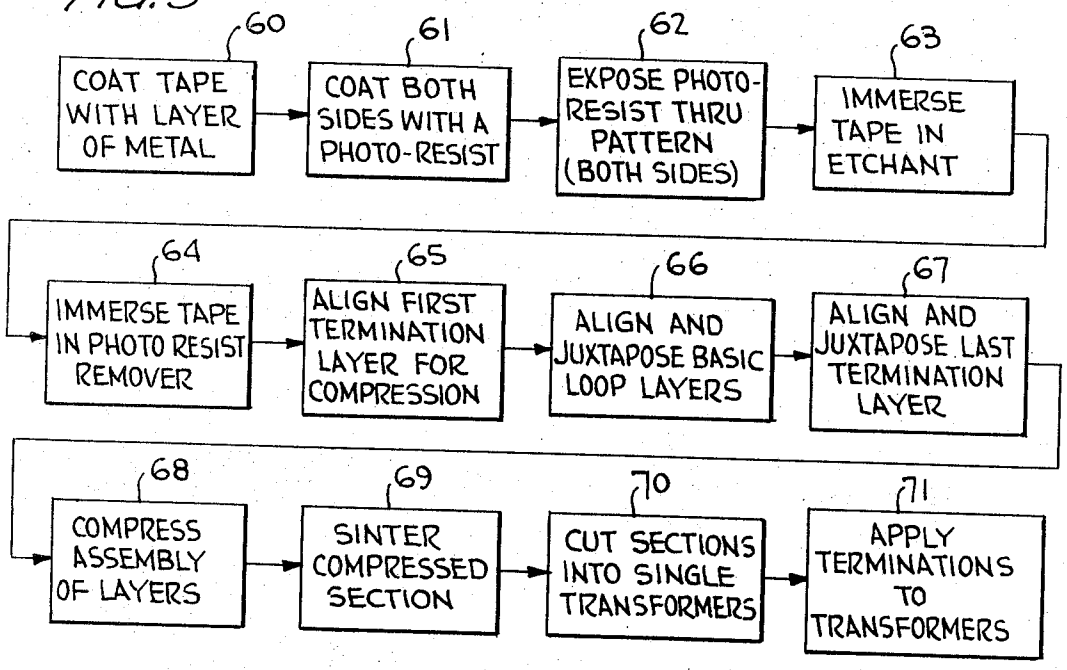
60
COAT TAPE WITH LAYER OF METAL
61
COAT BOTH SIDES WITH A PHOTO-RESIST
62
EXPOSE PHOTO-RESIST THRU PATTERN (BOTH SIDES)
63
IMMERSE TAPE IN ETCHANT
64
IMMERSE TAPE IN PHOTO RESIST REMOVER
65
ALIGN FIRST TERMINATION LAYER FOR COMPRESSION
66
ALIGN AND JUXTAPOSE BASIC LOOP LAYERS
67
ALIGN AND JUXTAPOSE LAST TERMINATION LAYER
68
COMPRESS ASSEMBLY OF LAYERS
69
SINTER COMPRESSED SECTION
70
CUT SECTIONS INTO SINGLE TRANSFORMERS
71
APPLY TERMINATIONS TO TRANSFORMERS

FIG. 6

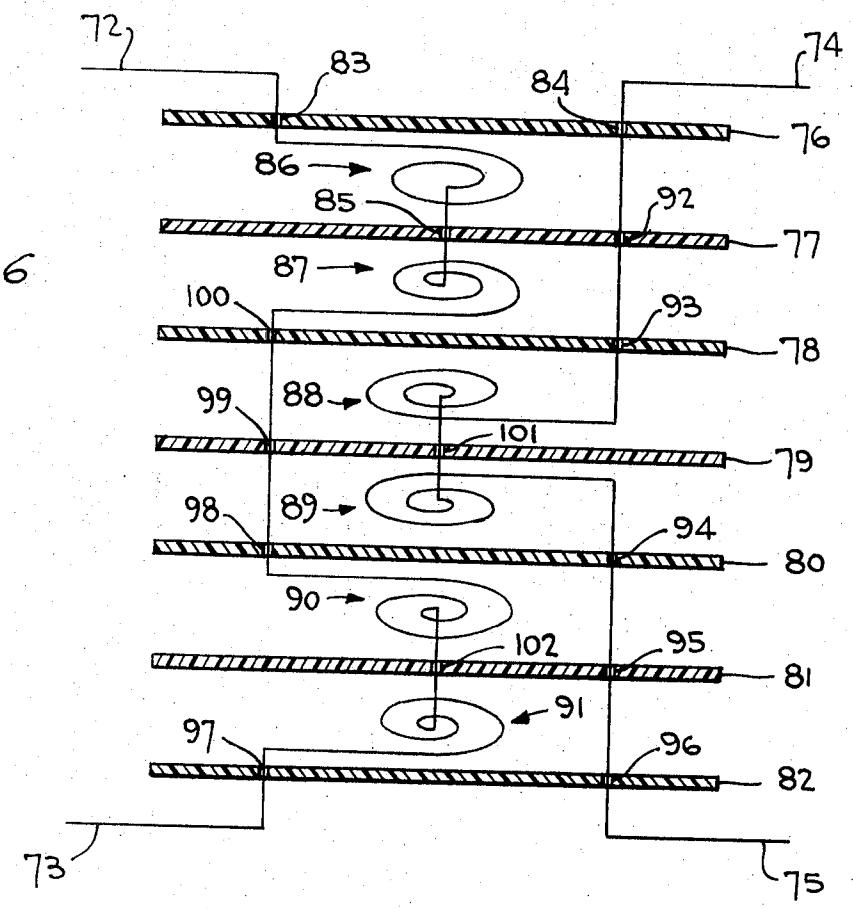
72
83
84
74
76
86
85
92
77
87
100
93
78
99
88
101
79
98
89
94
80
90
102
95
81
91
97
96
82
73
75

FIG. 4a

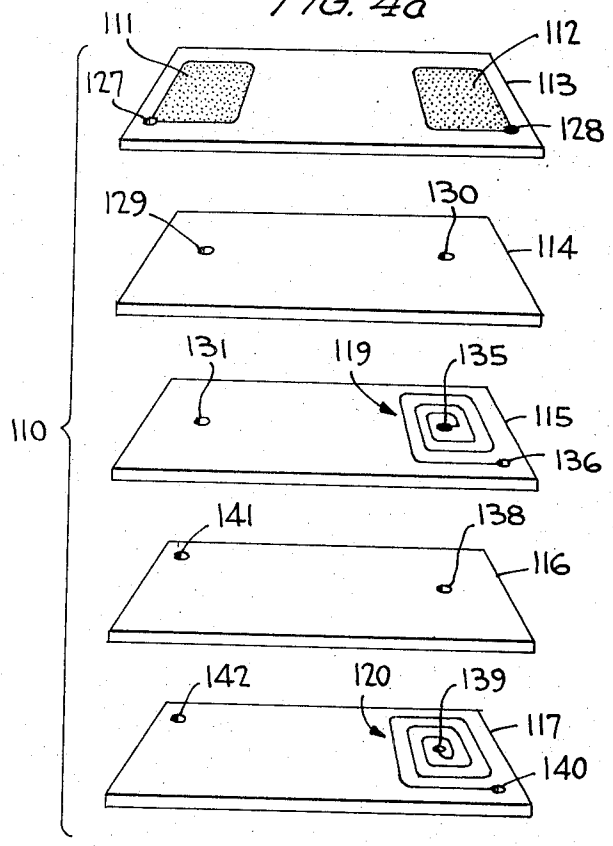

FIG. 4b

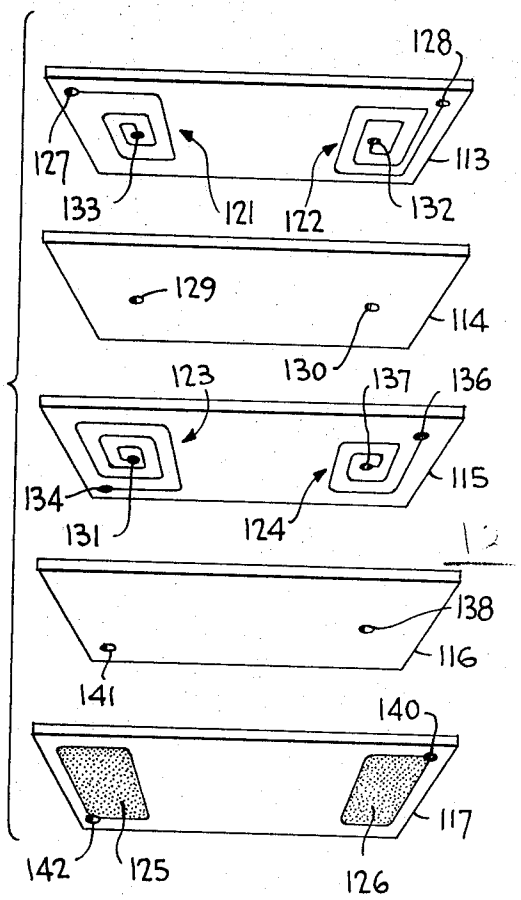

FIG. 5a

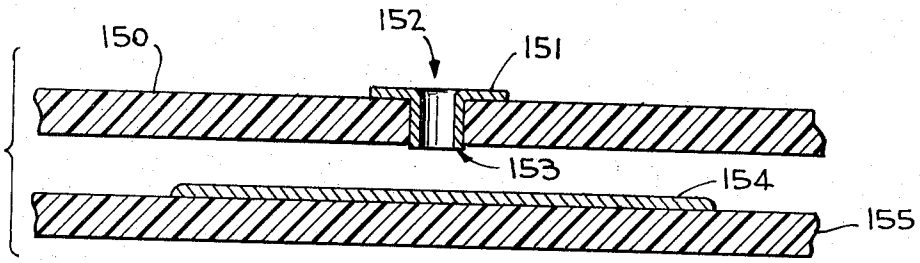

FIG. 5b

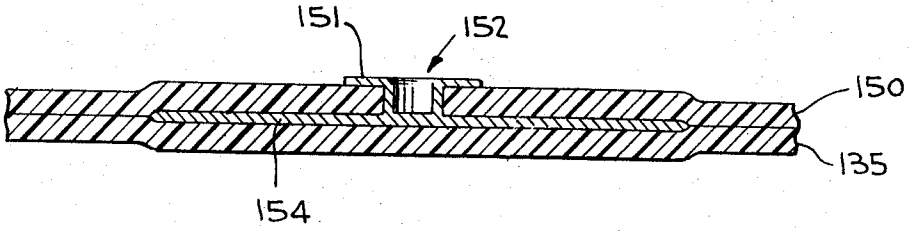

FIG. 7a

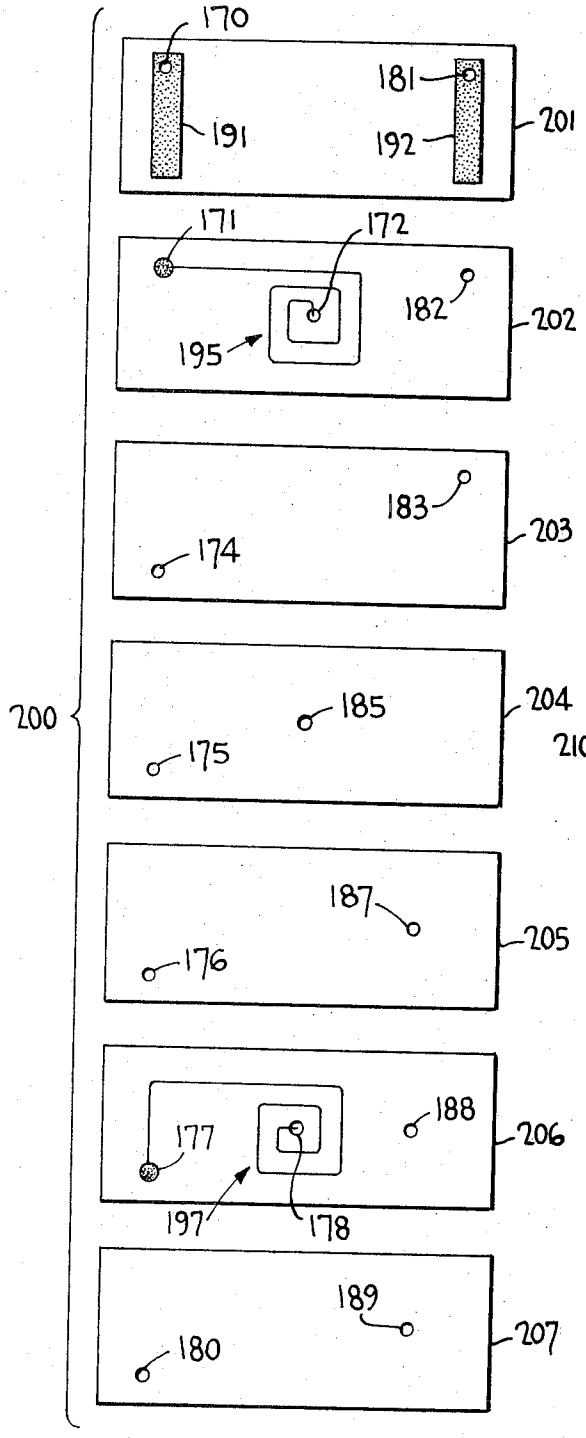
170
181
191
192
201
171
172
182
195
202
183
174
203
185
175
204
200
187
176
205
188
177
206
197
178
189
180
207

FIG. 7b

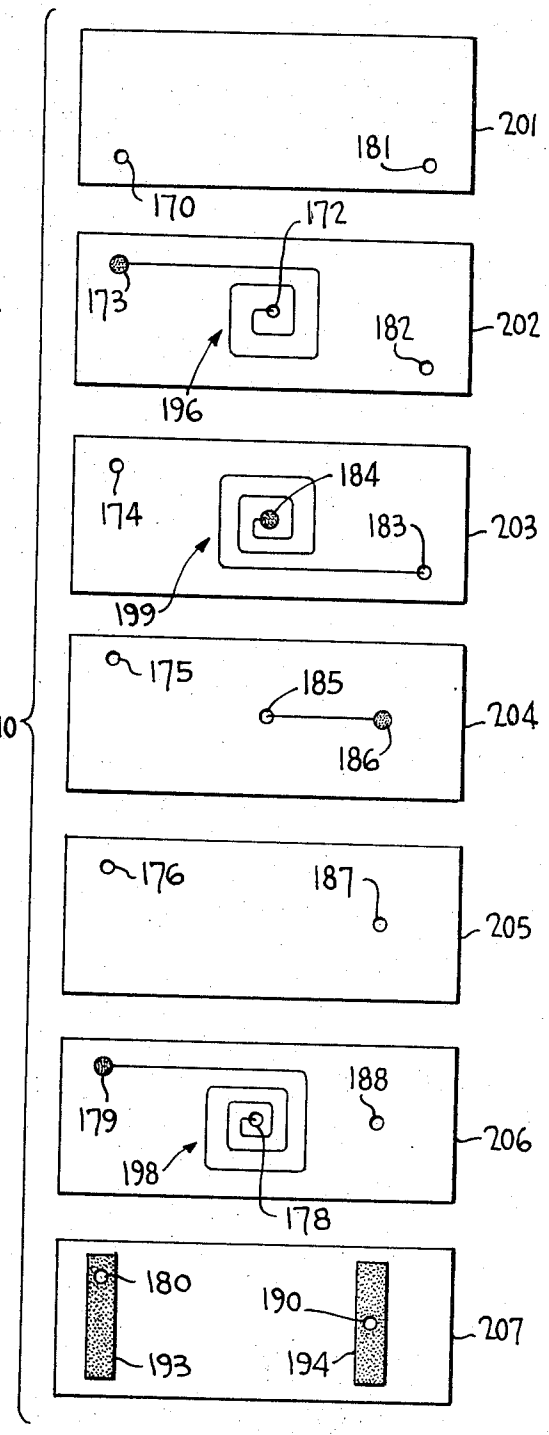
201
181
170
172
173
182
202
196
184
174
183
203
199
175
185
204
186
210
176
187
205
188
179
206
198
178
180
190
207
193
194

MICROMINIATURE MONOLITHIC FERROCERAMIC TRANSFORMER

RIGHTS OF THE GOVERNMENT

The invention described herein may be manufactured, used, and licensed by or for the United States Government for governmental purposes without the payment to the inventor of any royalty thereon.

BACKGROUND OF THE INVENTION

This invention relates generally to monolithic microminiature components for use in the assembly classified microcircuitry using substrates as a basis onto which the various types of components are mounted. Less generally this invention relates to a monolithic microminiature transformer element and a method for making the same. Specifically this invention relates to a microminiature monolithic transformer element with a magnetically permeable core comprising a magnetically loaded ceramic material and a process for making in mass production large quantities of this device at very economical prices. Moreover, it is related to that class of devices classified as transformers which possess primary and secondary windings wound around an inner core having the property of significantly enhancing the magnetic field. Among the classes of microelectronic manufacture to which this invention applies are thick film technology, thin film technology, and hybrid multichip technology. In any case, the invention is to be used where reduction in size is required; a large quantity is to be produced; and cost is an essential factor.

The most closely related device to this particular invention are spiral inductors which are made by the application of thick and thin films and by subtractively etching the inductor. A helical miniature inductor and method related to the invention herein is discussed in copending application, "Ceramic Inductor and Method for Making Same," having Ser. No. 230,247. A number of approaches to making microminiature transformers have evolved. The most advanced approach and the one most related to this particular invention is a monolithic transformer comprising fine wire wound onto iron rods and coated with an epoxy in order to fix the position of the wire to maintain the characteristics of the device. Many problems exist with such a structure, one of which is a possibility of the epoxy breaking down or a particular piece of wire becoming loose due to the various heat processes necessary to attach the particular component into electronic circuitry. Such flaws in this type of device under abnormal physical conditions can cause severe changes in the circuit characteristics. This is especially true in military applications where hardware comprising electronic microminiature circuitry is subjected to large accelerations and shocks.

There are other designs of monolithic microminiature transformers essentially the same as the one previously described. The difference is that these devices are molded into plastic, and naturally, they are the common structures for transformer elements which are not microminiature and which are not monlithic in the sense of this invention in that the various parts of the inductor are not chemically bonded or thermally fuzed to each other. In general, in the past transformers in microminiature form-factors and form-factors easily applicable to hybrid microelectric circuits have been extremely expensive and in relationship to the cost of other functional components to be used in the circuits

and therefore offers a cost factor against the use of such components.

Another inherent disadvantage in the structure of the aforesaid components is the nature of the conductive terminations formed on the device for interconnecting it into the particular circuit for which it is needed. In most cases, such as that of a plastic device is best only to epoxy such a device to the substrate using a conductive epoxy material because of the problems involved in raising the temperature of such a device to that necessary for soldering into the circuit. The difference in thermal coefficient between the plastic and the metal terminations at the ends thereof usually preclude the use of high or even moderate soldering temperatures for interconnecting such devices into the circuit. These differences in thermal coefficience are extremely cumbersome when soldering microminiature devices. In general, in assembling hybrid circuits it is desirable to reflow solder chip components. If it is not possible to reflow solder chip components into circuits, the next feasible alternative is wire bonding for interconnecting the component into the circuit. Either of these methods precludes other sensitive semiconductors from having to be reheated many times. All devices in use today, except twinspiral-type transformers deposited onto substrates, have significant thermal mismatches in materials.

In the case of the twin spiral type transformer when one spiral is coupled to another spiral type winding printed on a substrate such as alumina or mylar the coupling between the two spirals are not significantly enhanced because of the lack of a common closed magnetic circuit. Usually there is free space above the spiral unless some particular type of coating is applied. One problem with spiral coaxial transformers are twinspiral transformers printed onto to very thin sheets of material is a high probability of changes in the Q factor by bending of the substrate. Another problem of the spiral is interconnection. When both terminations of the spiral are on the same side of the substrate one of the terminations must be crossed over the respective turns of that particular spiral to interconnect the spiral to the outside circuitry. This degrades operation of the device. Even if terminations are brought out on opposite sides of the substrate the problem of traversing the respectwve windings is still present.

The term "refractory material" is used herein to mean a substance that will not melt, decompose, or materially change under the processing conditions involved in forming the device herein described. Refractory material is generally classified into four broad groups. The group of utility here includes the polycrystalline materials such as ceramics and includes, for example porcelains, steatites, aluminas, and ferrites. The present invention is described with reference to these ceramics and, more particularly, thin sheets of alumna with ferrites mixed therein. However, it should be understood that tbe present invention is equally applicable to the other ceramic materials. The spirals comprising the secondary and primary windings of the transformer of this particular invention may be formed from a paste of glass, high melting point metal such as platinum and gold, and a decomposable fluid suspending agent, or surfactant, applied to the refractory oxide by any convenient method, for example, by dipping, brushing, or spraying. The relative amount of material within the paste may vary over fairly wide limits. The

main consideration is that the metal content be sufficiently high to insure that the resulting metal film after processing is continuous. The amount of fluid used as a suspending agent depends upon the method of application. If spraying is used, a relatively thin suspension is required. If brushing or "squeegee" screened processes are employed, thicker paste suspension should be such as to insure good conductivity of the deposition.

Magnetic materials usable for this device include 2–81 permalloy and carbonyl iron insulated powders, and ferroxcube III sintered powder.

Generally, a mean-particle size range which is suitable is 0.5 to 25 microns for the paste, with the preferred range being between 0.5 and 15 microns. Smaller particles are equally satisfactory. For the glass flux, a glass which fuzes and bonds to the ceramic at a temperature below the melting point of the metal and resists reduction under the usual processing conditions should be used. Glasses having these properties are readily compounded for mixtures of silica (SiO_2) and various combinations of the oxides of sodium (Na_2O), calcium (CaO), barium (BaO), magnesium (MgO), aluminum (Al_2O_3), boron (B_2O_3), potassium (K_2O) and phosphorus (P_2O_5), among other elements. Table I is illustrative of some suitable glasses which can be conveniently compounded from typical oxides specified as to kind and amount in the table. The table is not intended to be exhaustive of suitable glasses but indicates a general composition of some readily fuzable nonreductible glasses. It is noted that this table encompasses many common types of glasses such as borosilicates, phosphates and silicates.

TABLE I

Melt Ingredient:	Parts by Weight
Li_2O	0–15
Na_2O	0–25
CaO	0–10
BaO	0–20
MgO	0–2
Al_2O_3	0–35
SiO_2	5–80
B_2O_3	0–30
K_2O	0–5
P_2O_5	0–80

In the preparation of the glasses, the ingredients are smelted together in a furnace at a temperature sufficient to melt but not volatilize the constituent oxides, for example, between 1100° centigrade and 1500° centigrade, until a mass of uniform quality has been obtained. The melt is fritted by pouring into cold water, and the resultant frit is ground to the fineness desired. It is desirable for the glass particles to be finally divided, for example, on the order of ½ micron to 25 microns particle size, so that the paste mixture will, under the processing conditions, result in a continuous metal layer adherently bonded to the ceramic.

The glass and metal particles are suspended in a volatile and decomposable fluid suspending agent or surfactant and applied to the refractory oxide by any of the methods aforementioned. The relative amount of metal and glass used may vary over fairly wide limits. The main consideration is that the metal content be sufficiently high to insure that the resulting metal film after processing is continuous. Generally, between five to 50 parts by weight of metal is used by each part by weight of glass.

The fluid suspending medium serves to disperse the paste mixture in the desired pattern on the substrate and to hold the pace in this pattern until processing commences. During processing the suspending medium should volatize leaving no residue. The suspending medium should not react with the metallic or glass components of the coating composition before or during firing. To insure proper dispersion and bonding of the paste, many of the common suspending media contained two components. The first component acts as a dispersing medium for the paste and as a solvent for the second component which insures proper bonding of the pace to the "green ceramic" or refractory oxide until processing commences. Examples of suitable dispersion media which are solvents for the below listed binders are benzene; the esters of fatty acids; alcohols of low molecular weight such as ethyl, butyl, and amyl; acetates including "cellosolve acetate" (ethylene, glycol, monoethyl, ether, acetate), diethylene glycol monoethyl ether acetate; ketones such as acetone and methyl-ethyl-ketone; and higher ethers such as glycol diethyl ether. Suitable binders are, for example, the vinyl or substituted vinyl polymers.

In general, any ceramic which is resistant to the usual processing conditions may be used as a refractory ceramic substrate. The following table is illustrative of various ceramic compositions that have been successfully used. The compositions are expressed in parts by weight.

TABLE II

Composition	Porcelain				Steatite	Alumina	
	A	B	C	D	E	F	G
Feldspar	35	50	30	25			
Ball Clay	15	10	8	10			
Kaolin	30	30	37	40	15		
Talc					60		
Dolomite				2			
$BaCO_3$					17.5		
$MgCO_3$			1		7.5		
SiO_2	20	10	25	22		9–10	2
CaO						1	1
MgO						3–4	1
Na_2O						1–5	½
Al_2O_3						(1)	95.5

[1]Remainder

In order to form a ceramic slurry with good flow properties, the aforementioned thermoplastic organics are used as flow promoting binders for the refractory oxide. The prime step is to coat the fine alumina particles with these thermoplastics. This step is facilitated by intense mixing at high temperatures in the range from 100° centigrade to 400° centigrade. Water emulsions of the organic plastic agents facilitate the initial mixing of the organic with the ceramic particulates, and the initial contact can be made by using an aqueous or nonaqueous slurry and solution. Removal of the volatile constituents provides an intimate mixture of the organic and the "green ceramic."

In a typical process, firing of the laminate is done in a furnace in which both atmosphere and temperature can be controlled. The firing is done in a reducing atmosphere. This firing step is carried out under conditions sufficient to volatilize the fluid suspending media, and to commence formation of a refractory ceramic-to-glass-to-metal bond. The temperature and firing time

are interdependent. The fluid suspending vehicle used and the temperature required commences formation of the refractory ceramic-to-glass-to-metal bond. This temperature is dependent upon the temperature required to sinter the ceramic and to cause wetting of the refractory ceramic and at least part of the metal by the glass in the paste system. Such wetting and sintering temperatures are dependent upon the glass flux used. Temperatures ranging from, for example, 1400° centrigrade to 1600° centrigrade have been successfully used.

The maximum temperature is limited by the melting point of the metal while the minimum temperature is again dependent upon the wetting and the sintering temperature of the glass flux employed and the temperature required to sinter the ceramic wetted by the glass comprising the paste.

The invention described herein overcomes many of the disadvantages of the foregoing constructions. It is therefore the object of this invention to provide a new and novel process for manufacturing monolithic microminiature transformer elements with a magnetically permeable core.

It is yet another object of this invention to provide a new and novel microminiature transformer element with a magnetically permeable core which is monolithic and comprises materials having coherent thermal coefficients.

It is yet an additional object of this invention to provide a new an novel device and process for manufacturing said device which is economical and easily adaptable to high volume manufacturing used in the thick film industry.

It is yet an additional object of this invention to provide a monolithic trnasformer having conductive primary and secondary windings comprising combinations of spiral helical conductive paths emmersed in a magnetically permeable ceramic material with bonding paths thereon suitable for attachment of metal tabs or for wire microbonding the components to the appropriate electronic circuitry.

It is another object of this invention to provide a microminiature monolithic transformer element which has a form factor compatible with that of other components used in hybrid microelectronics.

It is still an additional object of this invention to provide a microminiature monolithic transformer element with a structure made of ceramic and cermet materials.

It is yet another additional object of this invention to provide a transformer having a surface of refractory ceramic material.

It is yet an additional object of this invention to provide a microminiature monolithic transformer with a new and novel core comprising a magnetically permeable alumina ceramic.

It is yet an additional object of this invention to provide a combination helical spiral path winding for a transformer, said path being imbedded in a magnetically permeable alumina ceramic having a rectangular solid form factor.

Yet another additional object of this invention is to provide a new and novel microminiature monolithic transformer element whose electrical paths are formed by metalization paths of thick film and thin films.

Still an additional object of this invention is to provide a new and novel method for making a microminiature monolithic transformer in which the electrical conductive paths are formed onto unfired alumina ceramic tape by a subtractive etching technique.

Still yet an additional object of this invention is to provide a new and novel design of metalization which provides a helical spiral path that provides transformation of voltage and current functions within a compact area.

These and other objects of the present invention will become more fully apparent with reference to the following specifications and numerous drawings which relate to several variations of a preferred embodiment of the invention described herein.

SUMMARY OF THE INVENTION

A monolithic microminiature transformer comprising a combination helical spiral conductive path for the primary and secondary windings, of deposited metal film immersed in a rectangular block of magnetic refractory material. The transformer is either made with a coparallel windings or intermeshed windings. The terminations of the transformer are metallized paths located thereon. A method for making this transformer wherein spirals of conductive metal are deposited onto a thin unsintered magnetically permeable unsintered ceramic sheet with holes therein for interconnection and wherein said holes are aligned and said sheets are laminated such that upon centering said metal forms a spiral helical combination path of contiguous conductive material immersed in a contiguous block of ceramic.

BRIEF DESCRIPTION OF THE DRAWINGS

The specific nature of the invention as well as other objects, aspects, uses, and advantages thereof will clearly appear from the following description and from the accompanying drawings, in which: FIG. 1 (*a*) is an illustration of the process of manufacturing magnetically permeable ceramic tape.

FIG. 1 (*b*) is a flow chart of the method for manufacturing magnetically permeable ceramic tape.

FIG. 2 (*a*) is an illustration of the pattern deposition processed by which conductive paths are formed on the ceramic tape.

FIG. 2 (*b*) is a flow chart of the pattern deposition process.

FIG. 3 is a flow chart of the manufacturing process by substractive etching.

FIG. 4 (*a*) is a top view of the layers of a biaxial embodiment of the microminiature monolithic transformer.

FIG. 4 (*b*) is a bottom view of the layers of a biaxial microminiature monolithic transformer.

FIG. 5 (*a*) is an illustration of two adjacent layers of ceramic tape with conductive patterns thereon for lamination.

FIG. 5 (*b*) is an illustration of two adjacent layers laminated with the interconnection of the conductive metallization from one layer to the next.

FIG. 6 is a graphic illustration of a coaxial microminiature monolithic transformer showing the spatial configuration of the various spirals.

FIG. 7 (*a*) is a top view of the various layers of a coaxial microminiature monolithic transformer.

FIG. 7 (*b*) is a bottom view of the layers of a particular embodiment of a coaxial microminiature monolithic transformer.

These and other objects of the present invention will become more fully apparent with reference to the following specifications and the drawings which relate to several variations of a preferred embodiment of the present invention.

DESCRIPTION OF THE PREFERRED EMBODIMENT

The manufacturing process of the present invention will be easily understood in broad aspects by reference to FIG. **1** (*a*) wherein there is illustrated the basic steps in the manufacture of the magnetically permeable ceramic tape. The construction principle of the multilayer ceramic transformer chip begins with the mixing of a slurry **14** of alumina powder and various binders that can be cast into thin layers **10** on a flat surface **11.** However, before casting, a magnetically permeable powder **12** is added to the slurry of ceramic material **14.** A doctor-blade **29** is normally used to achieve the required thinness and uniformity. Organic binders in the slurry give enough strength and flexibility to the tape **10** after drawing for removal and handling. Strips **19** are cut out of this tape and backed with insulating paper **17** and then holes are punched with the tool **16** and the resulting strips are rolled onto rolls **18.** Stripping or cutting of strips is done with tool **15.** In order that this particular portion of the process may be easily understood it is presented in flow-chart form. In FIG. **1** (*b*) step **20** consists of adding a portion of magnetic powder to the ceramic slurry **14.** The proportion of the magnetic material added to the ceramic material may vary between **5** and **30** percent of the volume of ceramic material. The next step of the process **21** is to spread this slurry material by doctor blade to the desired thickness. After step **21** is accomplished the ceramic sheet material is dried, step **22,** by convection or infrared or other heat transfer means. Once the ceramic sheet material is dry it acquires a plastic and rubber-like characteristic and becomes very flexible, yet not brittle. In step **23,** this tape-like, rubber-like material is cut into long strips **19.** In order to prevent the slurry tapes from sticking together due to temperature changes during rolling, a paper of plastic backing is appositioned, step **24,** to the tape and the tape is then, in step **25,** punched with holes at the required locations. The long strips of tape are next rolled onto reels, step **26.** This completes the process for formation of the tape.

The next phase necessary in the production of these monolithic microminiature transformers with magnetically permeable ceramic cores is a formation of conductive paths by pattern deposition as shown in FIG. **2** (*a*). The reels of ceramic tape **27** are fed through a printer **30** which screens conductive pattern necessary to form the spiral windings of the transformer onto the tape **19.** The tape **19** is then fed through a drying oven or apparatus **31** which removes the highly volatile components from the metallization silk screened onto the substrate **19.** After the metallization is dried the paper is separated from the ceramic tape **19** and rolled onto reels **50** for reuse. The ceramic tape **19** is then fed into a compressor and laminator apparatus **35** along with reels of tape from other lines similar to the one we have just described as illustrated in **34.** Sections of these sheets are aligned and stacked and the stacked structure **36** is compressed and laminated by compression apparatus **35** and the resulting compressed structure is cut from the tape sources and trimmed with cutting apparatus **37.** These large compressed sheets of ceramic tape with metallization thereon contain many transformers. These laminated structures **38** are then carried by belt **41** to a sintering oven **39** which cures the ceramic block of transformers **38** at temperatures up to 1600° centrigrade transforming the laminated structure **38** into a monolithic mass of conductive, ceramic, and magnetically permeable powder immersed and surrounded by the various granules and molecules of alumina ceramic. Once this essential step is completed it is necessary to use a diamond cutter **40.** The above steps are illustrated in flow chart form in FIG. **2** (*b*). Note that the step **58** of FIG. **2** (*b*) indicates that metal terminations are attached to the individual transformers. Step **58** is a final increment in the production of these transformers. Usually metal tabs are attached to the various exit bonding terminations. In particular, FIG. **3** shows the various steps necessary in order to form the proper pattern and to get the proper interconnections between the various layers to compose an interconnected spiral transformer. If we were to take a transformer cut from the laminae **38** which, for instance is comprised of **5** layers of ceramic tape **19** the structure would look as indicated and illustrated in FIGS. **4** (*a*) and **4** (*b*), FIG. **4** (*a*) illustrating the top view and FIG. **4** (*b*) illustrating a bottom view of the printed matter on the layers **19.** Taking one of the dice of laminae **38** and on stacking it such that the top layer **113,** the next layer **114** and so on to the bottom layer **117** are illustrated in FIG. **4** (*a*) and FIG. **4** (*b*). First looking at the top of a particular layer as illustrated in FIG. **4** (*a*) and then looking at the bottom of a particular layer as illustrated in FIG. **4** (*b*) we obtain a view of the interconnections and corresponding parts between various layers of the transformer **110.** One layer **113** of the transformer in FIG. **4** (*a*) is shown metallization pad **111** with hole **127** therein. This hole **127** is formed therein by tool **16** and similarly for holes **128, 129, 130, 131, 136, 141, 138, 142** and **140** as illustrated in FIGS. **4** (*a*) and **4** (*b*). Conductive metallization **111** is connected to the other side of layer **113** via hole **127** which connects **111** to spiral **121** and specifically to metallization pad **133.** Metallization pad **133** is connected to spiral **123** and metallization pad **134** through metallized holes **129** and **131.** Metallized pad **134** of FIG. **4** (*b*) is connected via hole **141** and **142** to terminating bonding pad **125.** The conductive path from pad **111** to pad **125** through layer members **113, 114, 115, 116** and **117** comprises the secondary winding for this particular embodiment of a biaxial microminiature monolithic transformer element **110.** The conduction path from pad **112** to pad **126** through layers **113, 114, 115, 116** and **117** in which spirals **122, 119, 124** and **120** are interconnected comprises the primary winding for the microminiature monolithic transformer **110.**

Turning further to FIGS. **5** (*a*) and **5** (*b*) the intricacy of interconnecting a metallization pad **151** on the surface of one layer **150** to a metallization pad **154** on the surface of another layer **155** is described. FIG. **5** (*a*) shows two layers **150** and **155** of ceramic tape with metallizations **151** and **154** thereon and metallized through-hole **152** therein before lamination and interconnection. Ceramic tape **150** is positioned and aligned on top of ceramic tape **155.** Appositioned onto ceramic tape **150** is a metallization connection path **151.** This metallization connection path **151** is connected to met-

allization connections path **154** through hole **152.** It is noted that hole **152** is metallized throughout. FIG. **5** (*b*) shows two ceramic tape layers appositioned to each other and appropriately compressed. What is shown is ceramic tape **150** on top and juxtaposed to the ceramic tape **155.** Metallized hole **152** is compressed into metallized connection pad **154** forming a continuous conductive path from **151** to pad **154** with the metallization in hole **152** serving as the connecting means.

In FIG. **6** a diagrammatic cross section of a microminiature monolithic transformer having coaxial primary and secondary spiral windings is illustrated. In this embodiment the transformer is comprised of layers **76, 77, 78, 79, 80, 81** and **82.** These layers aforementioned have holes therein to provide a conductive path through the monolithic block interconnecting the leads of the primary and secondary windings. In particular, the primary winding comprises complimentary spirals **86, 87, 90** and **91.** The secondary winding comprises complimentary spirals **88** and **89.** Leads **72** and **73** provide exit terminations for the primary winding and leads **74** and **75** provide exit terminations for the secondary winding. Tracing the primary winding from end termination **72** conductive material passes through hole **83** to conductive spiral **86** through hole **85** to conductive spiral **87** through hole **100** and holes **99** and **98** to conductive spiral **90** and then through hole **102** to complimentary conductive spiral **91** and finally through hole **97** to exit termination **73.** Note that spiral winding **86** may be appositioned either to layer **76** or layer **77.** Similarly for conductive spiral winding **87** which may also be attached to layer **77** or alternately to layer **78.** This also holds for conductive spiral windings **88, 89, 90** and **91** because of the unique way in which the various layers are interconnected due to lamination. Secondary winding for the monolithic transformer comprises end termination **74** which passes through hole **84** and holes **92** and **93** to complimentary spiral **88** and then through holes **101** to complimentary spiral **89,** then to holes **94** and **95** and **96** to termination **75.**

In FIGS. **7** (*a*) and **7** (*b*) are illustrated a top view and a bottom view, respectively, of the coaxial construction of the monolithic transformer as illustrated diagrammatically in FIG. **6.** Tracing the conductive path of the primary winding of the microminiature monolithic transformer illustrated in FIGS. **7** (*a*) and (*b*) we start from conductive pad **191** of transformer **200** which is connected to square spiral **195** through hole **171.** Note that spiral **195** terminates in conductive hole **172.** And, metallized hole **170** is connected to metallized pad **171** terminating spiral **195.** Conductive hole **172** interconnects spiral **195** to complimentary spiral **196,** spiral **196** terminating in conductive pad **173.** Conductive pad **173** interconnects to conductive hole **174,** conductive hole **175** and through conductive hole **176** to conductive pad **177** interconnected to spiral **197** and terminating in conductive hole **178** which is interconnected to complimentary spiral **198** which terminates in conductive pad **179.** Conductive pad **179** is interconnected to terminating pad **193** via conductive hole **180.** The above denotes the path of the primary winding for the transformer **200** illustrated in FIG. **7** (*a*) and **7** (*b*). It is useful to note that kovar strip tabs may be welded to pads **191** and **192** and extended in the same direction. Similar kovar tabs extending in the opposite direction of those attached to pads **191** and **192** may be attached to pads **193** and **194** either by welding, soldering or other metal to metal joining means. Now to trace the secondary winding of the transformer **200** in FIGS. **7** (*a*) and **7** (*b*) we begin with conductive path **192.** Conductive pad **192** is connected to spiral **199** via holes **181** and layer **201,** hole **182** and layer **202** through hole **183** and layer **203** through the conductive spiral **199** to the conductive interconnecting pad **184.** Interconnecting pad **184** is connected to spiral **208** via interconnecting hole **185.** Spiral **208** interconnects interconnection hole **185** to conductive interconnecting pad **186** which in turn is connected to the terminating pad **194** on layer **207** via holes **187, 188** and **189.**

It is to be understood that barium titanate ($BaTiO_3$) may also be used in the slurry to enhance the properties of the refractory ceramic material.

The inventor wishes it to be understood furthermore that he does not desire to be limited to the exact details of construction shown and described herein for obvious modifications will occur to a person skilled in this art.

What is claimed is:

1. A microminiature transformer comprising:

a. a monolithic block comprised of a plurality of appositioned strata thermally fused together, each stratum comprised of sintered refractory ceramic dielectric material;

b. an electrically-insulated magnetically-permeable powder dispersed in said strata;

c. individual conductive metal primary spirals deposited on some of the surfaces of said strata, said primary spirals on each said stratum being coaxially located and enclosed by said block;

d. individual conductive metal secondary spirals deposited on some of the surfaces of said strata, said secondary spirals on each said stratum being coaxially located and enclosed by said block;

e. a first hole in each said stratum for housing a means for interconnecting each primary spiral;

f. a second hole in each said stratum for housing a means for interconnecting each secondary spiral;

g. said means for interconnecting each primary spiral comprising a metal film deposited on the inside cylindrical wall of each of said first hole;

h. said means for interconnecting each secondary spiral comprising a metal film deposited on the inside cylindrical wall of each of said second hole.

2. The microminiature monolithic transformer element of claim **1** wherein said primary spirals comprise a primary transformer winding and wherein said secondary spirals comprise a secondary transformer winding and wherein said dispersed powder provides a magnetically permeable flux link for said windings.

3. The microminiature transformer of claim **2** further comprising at least four deposited metal bonding pads, two of which are located on one face at said block, two more of which are located on the opposite face of said block, whereby one parallel and coaxial pair of said bonding pads form the terminations of the primary winding and another parallel and coaxial pair of said bonding pads form the terminations of the secondary winding.

4. The microminiature transformer of claim **3** wherein said powder is selected from the group consisting of 2–81 permalloy and carbonyl iron.

5. The microminiature transformer of claim 4 wherein said primary and said secondary spirals are coaxially oriented.

6. The microminiature transformer of claim 4 wherein said primary spirals are coaxially arranged about a first axis and wherein said secondary spirals are coaxially arranged about a second axis, said second axis being located a distance away from said first axis greater than the sum of the combined maximum radii of said primary and said secondary spirals.

7. The microminiature transformer of claim 5 wherein said strata are of equal thickness.

8. The microminiature transformer of claim 5 wherein said metal spirals, said metal film, and said metal bonding pads are thermally matched to said strata.

9. The microminiature transformer of claim 6 wherein said strata are of equal thickness.

10. The microminiature transformer of claim 6 wherein said metal spirals, said metal film, and said metal bonding pads are thermally matched to said strata.

11. The microminiature transformer of claim 1 further comprising melted glass frit dispersed in said conductive metal spirals and said metal film, whereby said frit provides a ceramic-to-metal bond.

* * * * *