(No Model.) 3 Sheets—Sheet 1.

F. S. OSBORN & C. E. FOSTER.

FILE BOX.

No. 456,591. Patented July 28, 1891.

Fig. 1.

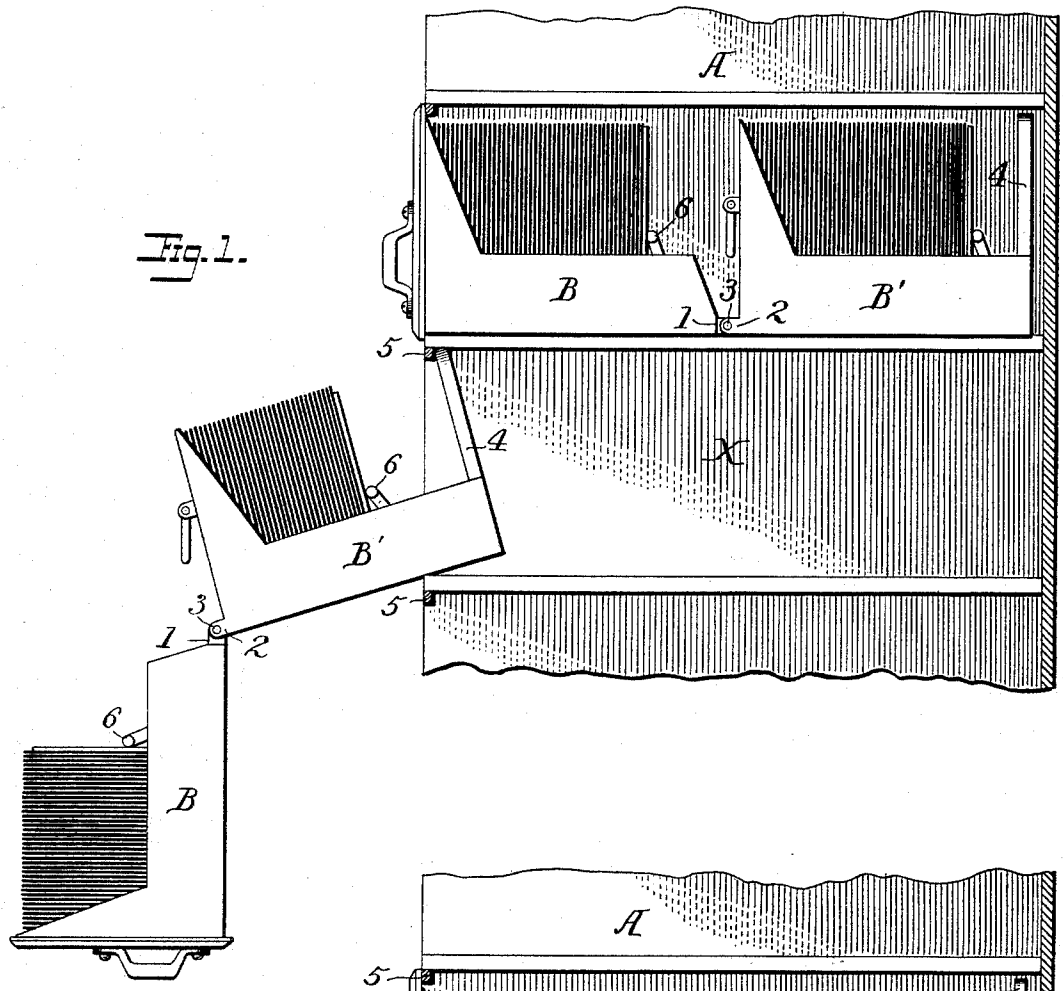

Fig. 2.

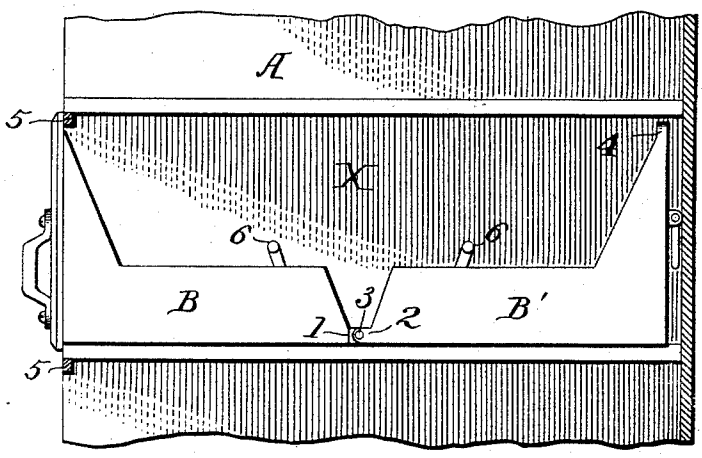

WITNESSES

Jno. G. Hinkel

I. A. Fairgrieve.

INVENTORS:

Frank S. Osborn.

Charles E. Foster.

By Foster & Freeman

Attorneys

THE NORRIS PETERS CO., PHOTO-LITHO., WASHINGTON, D. C.

(No Model.) 3 Sheets—Sheet 2.

F. S. OSBORN & C. E. FOSTER.

FILE BOX.

No. 456,591. Patented July 28, 1891.

Fig. 3.

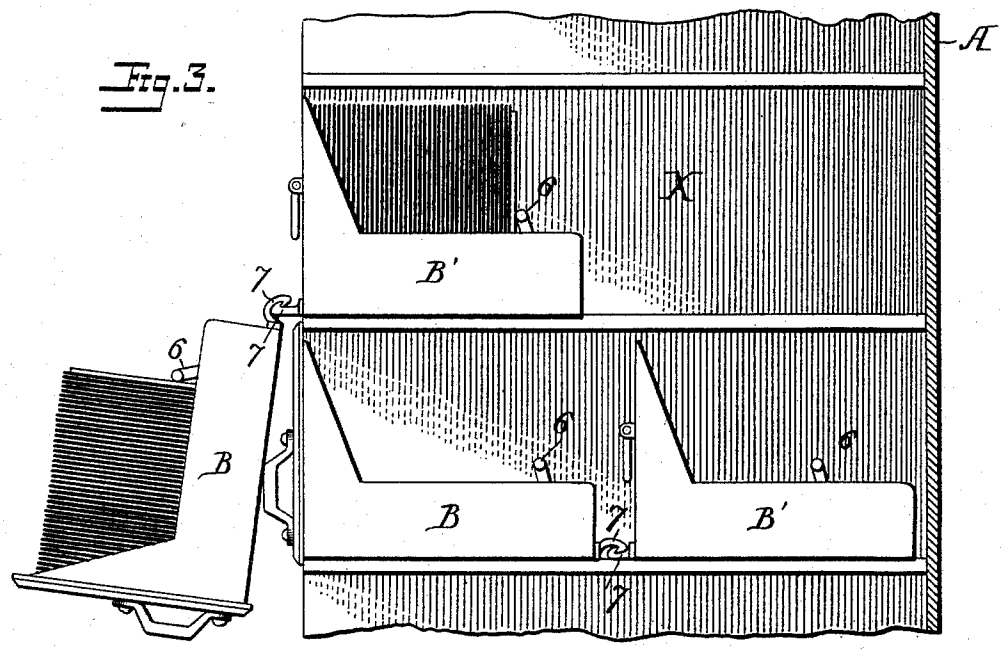

Fig. 4.

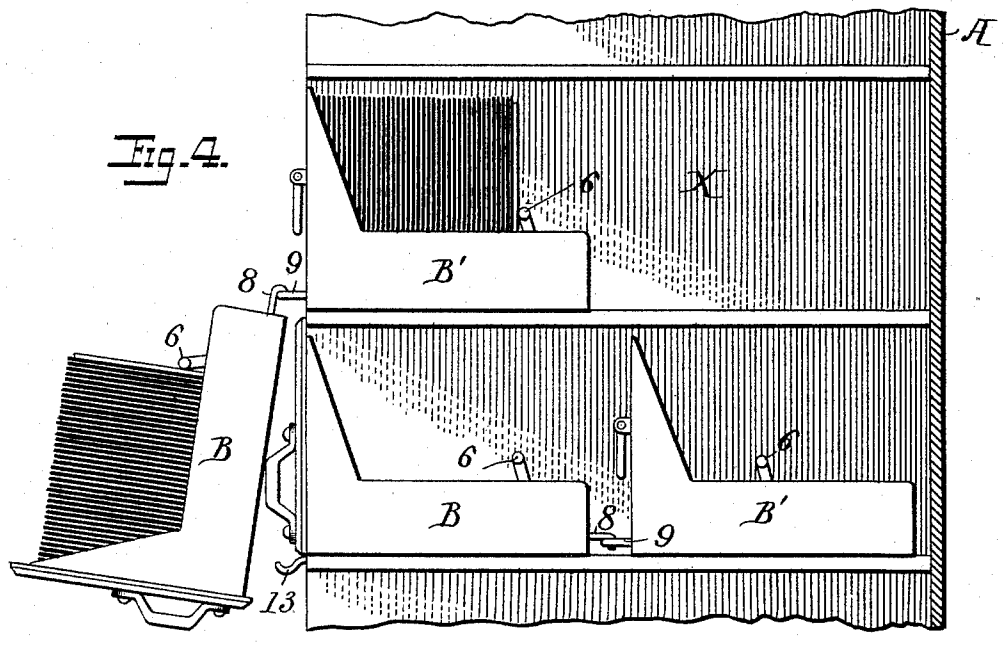

WITNESSES

Jno. G. Hinkel

L. A. Fairgrieve.

INVENTORS:

Frank S. Osborn.

Charles E. Foster.

By Foster & Freeman

Attorneys.

THE NORRIS PETERS CO., PHOTO-LITHO., WASHINGTON, D. C.

(No Model.) 3 Sheets—Sheet 3.

F. S. OSBORN & C. E. FOSTER.

FILE BOX.

No. 456,591. Patented July 28, 1891.

Fig. 5.

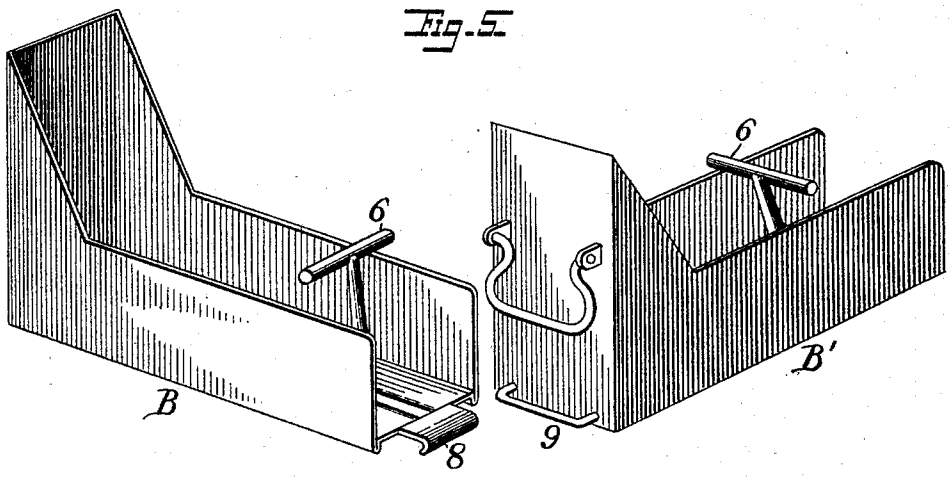

Fig. 7.

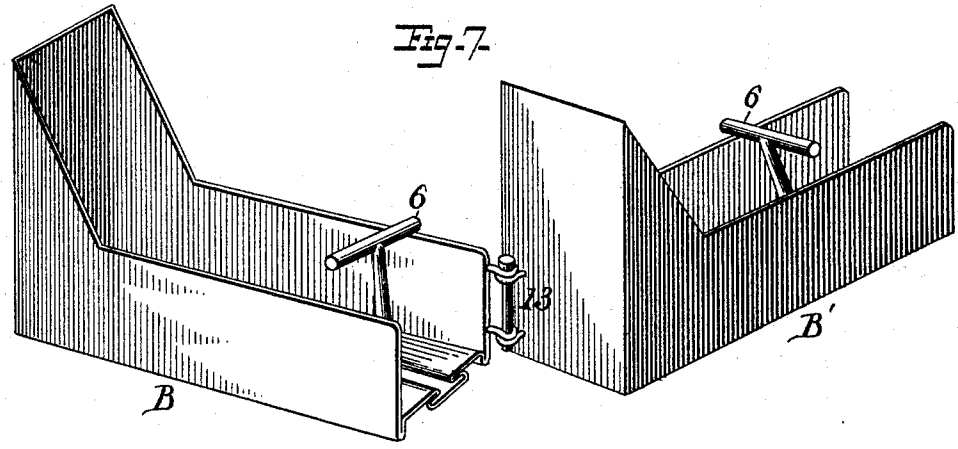

Fig. 6.

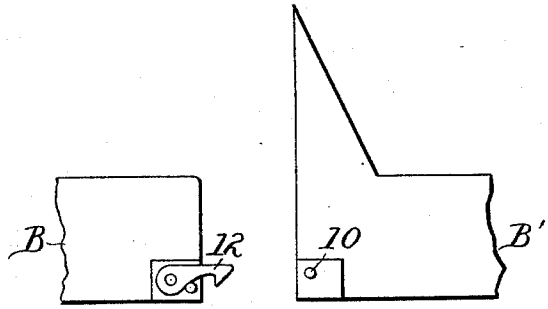

WITNESSES
Jno. G. Hinkel
L. A. Fairgrieve.

INVENTORS:
Frank S. Osborn.
Charles E. Foster.
By Foster & Freeman
Attorneys.

THE NORRIS PETERS CO., PHOTO-LITHO., WASHINGTON, D. C.

UNITED STATES PATENT OFFICE.

FRANK S. OSBORN AND CHARLES E. FOSTER, OF WASHINGTON, DISTRICT OF COLUMBIA, ASSIGNORS TO THE FENTON METALLIC MANUFACTURING COMPANY, OF JAMESTOWN, NEW YORK.

FILE-BOX.

SPECIFICATION forming part of Letters Patent No. 456,591, dated July 28, 1891.

Application filed April 18, 1891. Serial No. 389,493. (No model.)

To all whom it may concern:

Be it known that we, FRANK S. OSBORN and CHARLES E. FOSTER, citizens of the United States, residing at Washington, in the District of Columbia, have invented certain new and useful Improvements in File-Boxes, of which the following is a specification.

Many storage rooms or vaults in which it has become necessary to store papers or files to which reference must more or less frequently be made are only partially available for the purpose in consequence of their limited height and consequent limited wall-surface. Efforts have been made to remedy this difficulty where the floor area will permit the use of deep cases by increasing the length of the file-boxes; but this remedy is only a partial one, as it is not practical to lengthen the said boxes beyond a limited extent without impairing their strength and unduly increasing the weight. Another remedy consists in mounting additional cases upon the floor away from the walls; but this is expensive and often impracticable in consequence of the presence of pillars, radiators, light-openings, &c. In order to obviate these objections, we make use of wall-cases only, but increase the depth and provide each pigeon-hole with a double file-case consisting of two or more parts temporarily or permanently hinged together or otherwise connected, as fully set forth hereinafter, and as illustrated in the accompanying drawings, in which—

Figure 1 is a sectional elevation of part of a case embodying our improvements. Figs. 2, 3, and 4 are sectional elevations showing modifications or different ways of connecting the file-boxes. Fig. 5 is a perspective view of two file-boxes detached. Fig. 6 is a view showing another form of connection. Fig. 7 shows boxes provided with corner connections.

The case A is constructed in any suitable manner and of any suitable material, so as to afford shelves to support the boxes or series of receptacles or pigeon-holes X of the required transverse area; but the case is of such depth from front to rear that each shelf or pigeon-hole can receive two or more file-boxes of ordinary or suitable construction arranged end to end, so that when both are inclosed in the case the rear file-box B′ and the front file-box B will occupy the relative position shown in Fig. 1.

If the file-boxes were unconnected, the removal of the front file-box B would leave the rear file-box B′ in a position where it would be practically inaccessible, and for this reason we connect the two together, so that when the forward box is pulled out the rear box will slide forward with it. Preferably the connection between the two boxes is a hinged connection, and means are adopted in the form of some kind of a stop device to limit the normal forward movement of the rear box. Different hinged connections and different stop devices may be employed. Thus in Figs. 1 and 2 the inner end of the forward box and the forward end of the rear box are provided with overlapping ears 1 2, through which are passed connecting-pins 3, so that when the forward box has been drawn completely out of the case it may be turned down and hang from the front of the rear box, as shown at the lower part of Fig. 1, and in this case the rear box B′ is provided with a bail 4, making contact with a front cross-flange 5, that limits the forward movement of the rear box, holding it in an inclined position, as shown, without preventing it from being withdrawn from the pigeon-hole upon tilting the forward end upward. By this means access may be had to either or both boxes at the front of the case.

The file-boxes may be of any suitable character and material, and are preferably provided with the usual adjustable clamps 6.

In the construction shown in Fig. 2 the position of the rear box is reversed, so that the clamp end is foremost, to present the papers in a more accessible position in some cases.

It is preferable in most cases to make use of a slip or detachable hinge connection between the two boxes, so that both may be drawn out simultaneously until the front box is out of the pigeon-hole, when it can then be detached from the rear box and examined, leaving the latter in the pigeon-hole, but in position to be readily withdrawn, if necessary. Any suitable form of slip connection may be

employed. Thus in Fig. 3 the two boxes are provided with hooks 7 7, having oppositely-inclined ends and shoulders that engage automatically when one box is pushed in against the other. In Fig. 5 the front box has a hook projection 8, that engages with a loop or eye 9 upon the rear box. In Fig. 6 the front box has a pivoted pawl at each side, engaging with a side pin 10 of the rear box. In each case the engagement is automatic when the ends of the two boxes are brought together. Preferably the hook portion of the connection, when there is but one hooked portion, is upon the front box, as this permits the front box to hang from the rear box when the latter is at the front portion of the pigeon-hole, or the front portion could be hooked to a bracket or other support 12 at the front edge of the bottom partition below said pigeon-hole.

By the construction above set forth we are enabled without any other alteration than increasing the depth of the wall-casings and providing the ordinary file-boxes with suitable connections to double, treble, or quadruple the available filing-surface upon the wall of a room that has sufficient floor-surface to permit the proper increase in the depth of the case, for although we have illustrated the files as consisting of two connected boxes three or more may be connected in like manner, especially in filing papers to which only occasional reference is required.

While we have described and prefer a hinged connection that permits the front file-box to swing downward, the connection may be such as to permit the front box to swing to one side, as shown in Fig. 7, in which the hinge-pintle is vertical, with the hinge at one corner of the box.

Without limiting ourselves to the precise construction and arrangement of parts shown and described, we claim—

1. A file-case provided with pigeon-holes or receptacles, with two or more file-boxes arranged end to end in each receptacle and connected together, substantially as set forth.

2. The combination, with the case having pigeon-holes, and two or more file-boxes arranged end to end in each pigeon-hole and hinged together, each provided with an independent clamp, substantially as described.

3. The combination, with a case having pigeon-holes, of two or more file-boxes in each pigeon-hole, hinged together end to end, each provided with a clamp, the clamp end of the rear box being outward, substantially as set forth.

4. The combination, with a file-case having pigeon-holes, of two or more file-boxes in each pigeon-hole, arranged end to end, with connecting devices connecting the contiguous ends of the file-boxes detachably together, substantially as set forth.

5. The combination, with a file-case, of file-boxes arranged one behind the other and hinged together, substantially as described.

6. The combination, with a case, of file-boxes arranged one in front of the other, and connections between the said boxes, the connections on the forward boxes being in the form of hooks, for the purpose set forth.

7. The combination of the case having stops, and file-boxes connected end to end, the rear boxes with devices for making contact with said stops, substantially as described.

In testimony whereof we have signed our names to this specification in the presence of two subscribing witnesses.

FRANK S. OSBORN.
CHARLES E. FOSTER.

Witnesses:
C. S. DOMER,
R. C. JONES.