April 14, 1931. H. L. COWLES 1,800,817

APPARATUS FOR REFUSE INCINERATION AND DISPOSAL

Filed Feb. 28, 1928 2 Sheets-Sheet 1

Fig.1

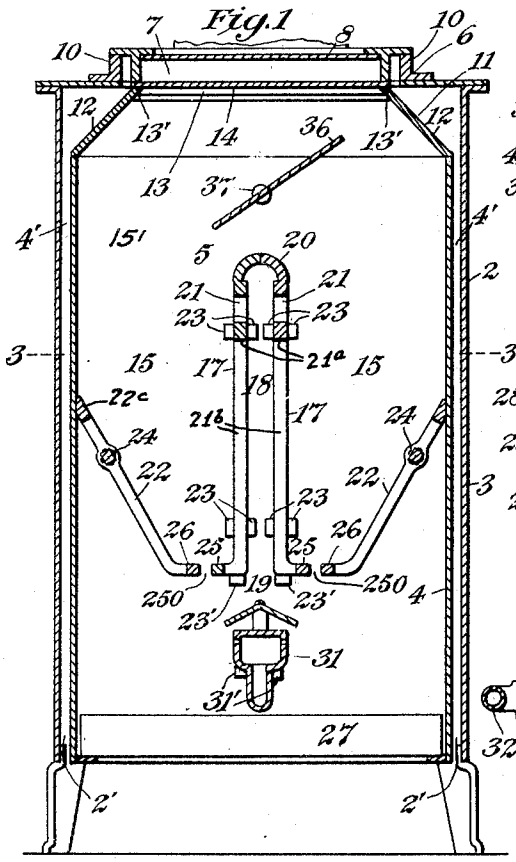

Fig.2

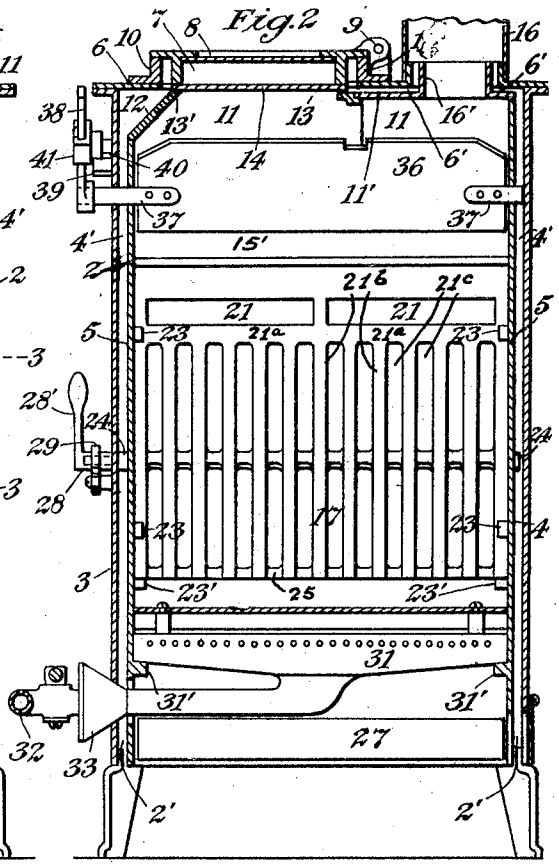

Fig.3

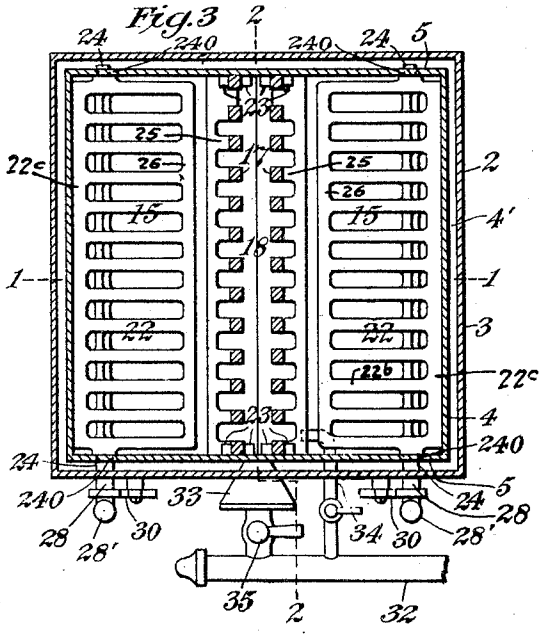

Fig.7.

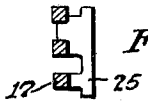

INVENTOR.
Harry L. Cowles
BY
Charles O. King
ATTORNEY.

April 14, 1931. H. L. COWLES 1,800,817

APPARATUS FOR REFUSE INCINERATION AND DISPOSAL

Filed Feb. 28, 1928 2 Sheets-Sheet 2

Fig.6

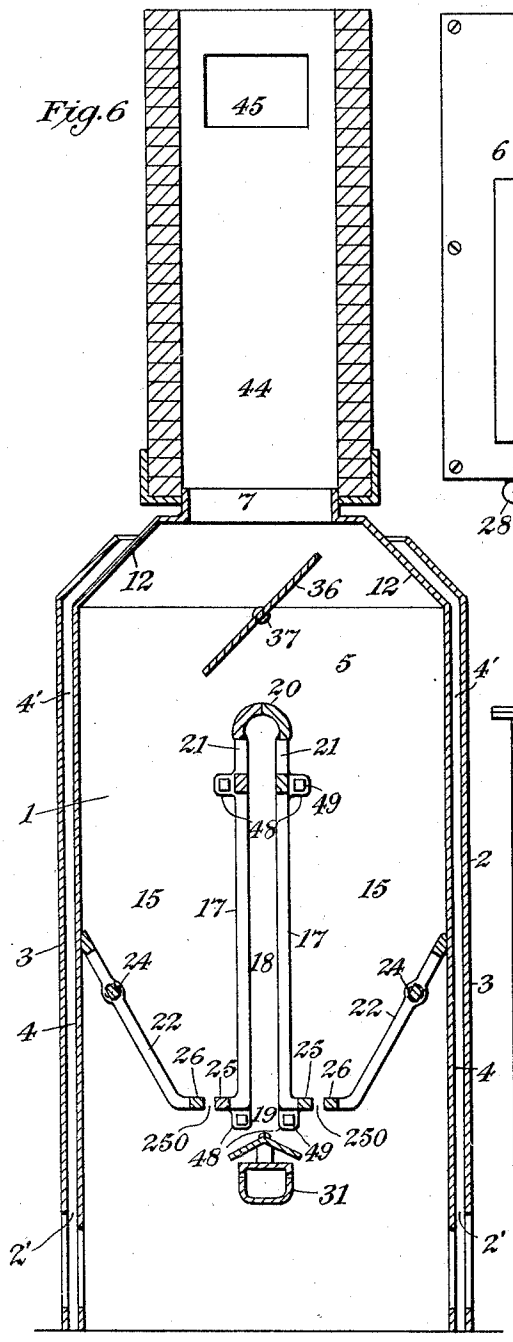

Fig.4

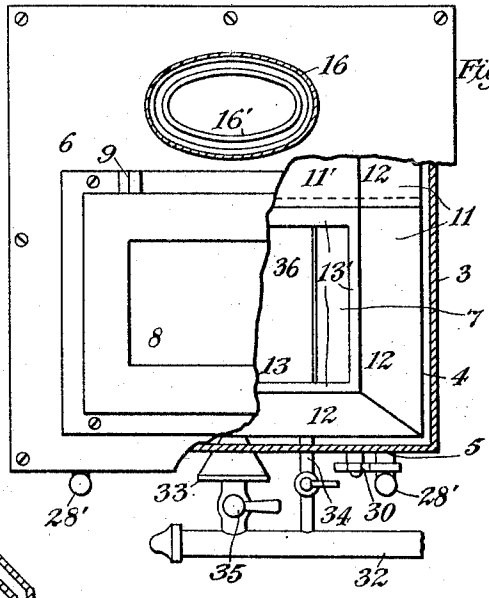

Fig.5

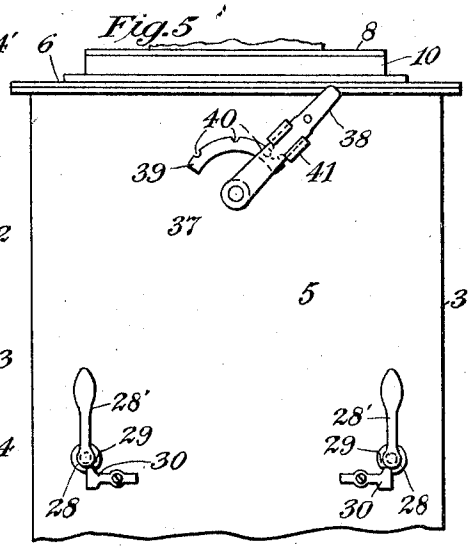

INVENTOR.

BY Harry L. Cowles

Charles O. King

ATTORNEY

Patented Apr. 14, 1931

1,800,817

UNITED STATES PATENT OFFICE

HARRY L. COWLES, OF NEW YORK, N. Y.

APPARATUS FOR REFUSE INCINERATION AND DISPOSAL

Application filed February 28, 1928. Serial No. 257,558.

This invention relates to apparatus for refuse incineration and disposal and particularly to apparatus of this type which is intended for indoor use. The main object of the invention is to provide an improved apparatus for incinerating refuse which is efficient in operation, in which the parts are few and simple, and are also adapted to be economically manufactured.

In carrying out my invention I provide a casing which preferably contains one or more refuse compartments and an upright flue adjacent the compartment or compartments. If two refuse compartments are employed said flue is preferably arranged between the two compartments and adjacent each of them and ordinarily said flue extends across the interior of the incinerator.

My invention is especially adapted to incinerators in which a flue of the above type is formed by upright walls preferably apertured and where the flue wall and compartment wall are arranged as a common wall between the flue and compartment and wherein the apertured walls are in the form of grids. One object of my invention consists in providing means whereby the grid or grids are supported by means of or on the end walls of the casing of the incinerator. Another object of my invention is to provide an inclined wall in each refuse compartment opposite to the wall forming a wall of the flue, and also to provide means whereby said inclined wall or walls are pivoted so that they can be oscillated by means of a lever, levers or other suitable means placed on the outside of the casing so that the ashes from incineration can be dropped into the ash pan. The said inclined walls serve the purposes of floor members of the respective compartments and are preferably formed with elongated apertures arranged upwardly. A further object is to provide an improved crown sheet at the upper part of the casing. And still another object is to provide improved means to control the admission of refuse into the incinerating compartments.

The means I prefer to employ for accomplishing the above objects, together with other advantageous and novel features of my improved refuse incineration and disposal apparatus, are illustrated in the drawings accompanying and forming part of this specification, and in which,—

Figure 1 is a vertical section of one form of my improved incinerator and taken on the line 1—1 as shown in Fig. 3.

Fig. 2 is a vertical section of the apparatus taken on the line 2—2 of Fig. 3 and at right angles to the section of Fig. 1.

Fig. 3 is a horizontal section of the apparatus taken on the line 3—3 of Fig. 1.

Fig. 4 is a top plan of this form of the invention with parts broken away.

Fig. 5 is a front elevation of a portion of the upper part of this form of the invention.

Fig. 6 is a vertical section of a refuse disposal and incineration apparatus also embodying my improvements, and

Fig. 7 is a detail horizontal section of a portion of one end of a flue grid 17.

Like characters of reference refer to like parts in all the figures of the drawings.

Referring first to Figs. 1, 2 and 3 of the drawings, the numeral 2 indicates the casing of the form illustrated in said figures and said casing is preferably rectangular in horizontal section and composed of outer walls 3 and inner walls 4. The casing includes two opposite end walls, preferably inner end walls such as 5, which are particularly employed for a purpose about to be described.

The outer part of the casing in this form of the apparatus has a top portion such as 6 which is preferably provided with an opening for passing in refuse and which is indicated by 7. There is a lid 8 preferably hinged at 9 to the top portion 6. In this form of the invention the outer portions of the top portion 6 are substantially horizontal and preferably there is a raised rim 10 around the opening 7.

The inner casing includes the before mentioned walls 4 and 5 and also a crown sheet such as 11 made preferably in two parts and having inclined walls 12 at the front and sides. The forward part has a charging opening 13 on the edges 13′ of which the depending portion 14 of the lid 8 normally rests. The rearward portion contains the

inner portion 16′ of the smoke outlet 16. There is a space 6′ between the top portion 6 and the flat part 11′ of the crown sheet and said space communicates with the space 4′ surrounding the inner walls of the casing. The space 4′ has an opening 2′ at the base of the casing and air can flow through said opening, up the space 4′ to the space 6′ and thence into the smoke outlet 16. This draft of air cools the outer walls of the casing during operation of the incinerator and also tends to prevent smoke from escaping under the edges of the lid 8.

The casing 2 may contain one or more refuse compartments and in the form herein shown, it contains two such compartments as indicated by 15. In this form the said compartments are oppositely disposed with an upright flue structure between them. The said flue structure preferably consists of two substantially straight walls such as the grids or apertured walls 17 and has an upright flue such as 18 between said walls and up which combustion products can pass.

The said flue structure is therefore a two part structure including the two walls or grids 17, which are held together by means which will presently be described. The said grids or walls are preferably bounded at their ends by the above-mentioned casing end walls. The said casing end walls also bound the ends of the flue thus bounding the ends of the flue structure. The said flue walls or grids also form side walls of the refuse compartments each such grid forming a wall of the compartment adjacent to it.

The flue structure is apertured at the bottom part so that preferably the flue 18 is entirely open as at 19, and there is a horizontally disposed cover portion such as 20, preferably arcuate in cross section. The grids 17 each contain top openings 21 extending horizontally at the upper part but below the cover 20 and across the grid. A horizontal bar 21*a* bounds the lower part of said openings 21, and below said bar are preferably arranged a series of vertical bars 21*b* with vertical apertures 21*c* between them. The said bars 21*b* are joined to a lower horizontal bar 25 which extends towards the interior of the adjacent refuse compartment 15.

In the opposite side of each of said compartments 15 is a wall such as 22, inclined both to the grid 17 and to the horizontal. In the form herein shown the wall 22 is in the form of a grid or apertured wall and has a substantially horizontal lower part 26 which forms part of the floor of its respective compartment 15. Preferably there are upwardly extending bars 22*b* which join a horizontal part 22*c* at the upper part of said grid. As thus formed, I term said members inclined floor grids and I have preferably provided suitable pivoting means whereby said grid or grids can be turned back and forth from outside the casing when desired. For effecting this I have provided trunnions or short shafts 24 one at each end journaled in the end walls of the casing as at 240.

The end walls 5 of the inner casing preferably extend across the interior of the incinerator, and in the form now being described, form the end walls of each of the compartments 15. The apertured walls or grids 17 are supported at each end by means of said casing end walls 5, and this may be accomplished in any suitable way. Preferably I provide projections such as 23 on said end walls and for convenience I place one or more of such projections adjacent the upper part of each such grid, preferably placing two of them spaced apart to support the grid on each side. Also I place one such projection such as 23′ under the end of such grid, on each end wall, and preferably four more projections 23 spaced apart, two each side of the grid end, somewhat above the projection 23′. Thus each grid will be suitably alined and supported at each end and may be assembled by sliding it down between said projections. As shown in the drawings in Figs. 1 and 3 the grids 17 have portions 25 which project inwardly so as to form parts of the floors of the compartments 15. The inclined grid or grids 22 have corresponding portions 26 nearly meeting the portions 25 leaving a space 250 between them for the purpose of clearance as will be needed when operating said grid or grids 22 in the manner now to be described. Each grid 17 is placed in position by sliding it down between an upper pair of the projections 23 and a lower pair of the same, at each end of the incinerator, until it rests on its respective lowermost supporting porjections 23′.

The hereinbefore mentioned inclined walls, or grids 22 being furnished with the trunnions 24 by which they are supported and journaled in the bearings 240 are adapted to be turned when it is desired to dump out the ashes from the compartments 15 into the ash pan 27. The trunnion at the front part of the incinerator engages a sleeve member 28 placed in the casing walls at that part and there is a lever 28′ secured to it outside the casing and by means of it the grid 22 can be turned back and forth when desired. There is a notched projection 29 on said member 28 which is adapted to be engaged by the latch 30 so that the grid 22 can be held in its normal position as shown in Fig. 1.

There is an elongated gas burner 31 placed below the flue 18, supported by means on the casing end walls by lugs 31′, and there is a gas supply pipe 32 connected to the burner together with an air mixer 33. A pilot light 34 is also connected to the gas supply pipe adjacent to the burner 31 for use when lighting the same.

I have also provided improved means to

control and regulate the filling of the compartments 15 with refuse by gravity so as to provide an improved method of drying the refuse and so that gas or other fuel for the incinerator can be economized. The said means are preferably placed below the opening 7 but higher than the compartments 15 in the space 15′ which I term the combustion chamber, and in the forms illustrated said means or a portion of the same are placed over the flue cover 20. The said means preferably include a device to permit one of the compartments to be filled with refuse separate from the other, after which the controlling device is shifted so that the second compartment is filled with refuse. Preferably the first compartment is not lighted until the refuse has remained in it a short time so that the draft of air through the flue will dry the refuse somewhat. If the gas is then lighted the refuse will soon catch fire and the gas can then be turned off in a short time thus resulting in a saving of gas.

The means for controlling the filling of the compartments with refuse consist preferably of a plate such as 36 having trunnions or short shafts 37 by which it is pivoted in the end walls 5 of the casing 2. One of the trunnions 37 extends through to the outside of the casing wall 3 and is furnished with a lever 38 by means of which the device is operated. There is a segment 39 having three notches 40 and there is a slidable member 41 which can be moved into and out of said notches so that the lever 38 and with it the plates 36 can be held in any one of three positions as required. Ordinarily one position is provided for filling the right hand compartment, one for filling the left hand compartment and one intermediate position, where both compartments can be filled at the same time. The plate or deflecting member 36 I sometimes term the refuse gate or controller. The said device may also be used in guiding the flow of gases and combustion products from the flue 18. When the plate 36 is turned vertically, the gases and combustion products can flow freely at both sides of the plate. If the plate is inclined to either side the rate of combustion and the gas flow is retarded according to the angle of the plate.

In the form of the invention shown in Fig. 6, my improved apparatus is illustrated as a built-in type and it is preferably shown below a flue or air-shaft such as 44 in a refuse disposal apparatus, said flue being provided with suitable openings such as 45 at the several floors of an apartment or other building in which it may be placed. The said openings are ordinarily provided with suitable means for closing them when not in use. The incinerator is indicated by 1, its casing by 2, its outer walls by 3, its inner walls by 4 and its inner end walls by 5. The two refuse compartments are denoted by 15, the upright flue between them by 18, the flue grids by 17, the inclined floor grids by 22 and the shafts thereof by 24. The gate or refuse controller is indicated by 36 and the operating lever therefor is not shown in this figure but it will be similar to the form for the type shown in Figs. 1, 2 and 5 together with the notched segment and member on the lever to engage with the segment.

In this form of the apparatus the grids 17 are secured to the end walls 5 of the casing 2 by means of lugs or projections 48 formed on the grids themselves, and there are bolts 49 passing through said projections 48 and screw-threaded into the said end walls 5.

In either form of the invention shown herein, when it is desired to make use of the refuse gate 36 in filling the incinerator with refuse, the lever 38 is turned as shown in Fig. 5 for instance, so that only the left hand refuse compartment 15 will be filled with refuse. When this compartment is filled, the lever 38 is moved on releasing the member 41 and the gate 36 is shifted to the opposite position, and the lever 38 will be on the left hand side with the member 41 engaging the left hand notch of the segment and the refuse will then drop only into the right hand compartment 15. When the refuse in the left hand compartment is dried sufficiently so that it will burn without uneconomical consumption of gas, the burner 31 is lighted by first lighting the pilot light 34 and then turning the cock 35 of the burner 31. The gas is permitted to burn until it is plain that the refuse will continue to burn without gas and the gas is then shut off. The heat from the compartment now operating will assist in drying the refuse collecting in the other compartment and alternate burnings can be made and the amount of gas greatly reduced. When very rapid incineration is desired the gas will be kept burning throughout the operation.

What I claim is:—

1. A refuse incinerator having two refuse compartments and embodying a casing having two end walls, grid supporting and alining means in two sets on each of said end walls, and a flue structure in the casing having two substantially straight upright grids each held by its upper and lower parts respectively at each end by said grid supporting means on said casing end walls, each grid forming a wall of one of said refuse compartments and also said flue between the same, said grid and flue each bounded at its ends by the respective casing end walls.

2. A refuse incinerator having two refuse compartments and embodying a casing having two side and two end walls, a flue structure in said casing having an upright flue and including two upright, straight, apertured walls, said flue walls also forming walls both of the flue and said compartments, and

means on said casing end walls for supporting and alining said apertured flue walls, said flue walls and flue being bounded at their ends respectively by said casing end walls, one of said casing side walls and said casing end walls forming the remaining walls of each of said refuse compartments respectively.

3. A refuse incinerator having two refuse compartments and embodying a casing having two side and two end walls, a two part flue structure in said casing having two upright apertured walls which form walls both of said refuse compartments and of a flue between them up which combustion products can pass, said flue and said apertured walls bounded at their ends by the casing end walls, one of said casing side walls and said casing end walls respectively forming the remaining walls of said compartments, and means on the casing end walls for supporting and alining said flue structure.

4. A refuse incinerator having two refuse compartments and embodying a casing having two end walls, and a two part flue structure extending across the incinerator between the refuse compartments each flue part embodying an upright apertured wall supported and alined on the casing end walls, and an upright flue between said apertured walls and up which combustion products can pass, each of said upright apertured flue walls also forming a wall of one of said compartments.

5. A refuse incinerator having two refuse compartments and embodying a casing having two side and two end walls, a flue structure in said casing between said refuse compartments and having two side walls and a flue between them up which combustion products can pass, parts of the casing end walls forming the flue end walls, the flue side walls being apertured and each respectively forming a side wall of the adjacent refuse compartment, casing side walls and the remaining portions of the casing end walls forming the remaining walls of the refuse compartments, means on the casing end walls for supporting said flue structure, and means below the flue for drying and igniting the contents of said compartments.

6. A refuse incinerator having two refuse compartments and embodying a casing having two end walls, and a two part flue structure extending across the incinerator between said refuse compartments, said flue structure supported and alined by means on said casing end walls, each flue part embodying an upright grid adapted to be slid into place independently of the other flue part.

7. An incinerator having a refuse compartment and embodying a casing having a side wall, an upright apertured wall which forms a wall of the refuse compartment and also of an upright flue extending across the incinerator, said apertured wall having a horizontal lower part extending toward the refuse compartment, and an inclined wall at the lower part of the latter adjacent the casing side wall and having a horizontal part extending toward and adjacent the first-mentioned horizontal part, said horizontal parts forming the lower portion of the floor of said compartment.

8. An apparatus of the class described having a refuse compartment and embodying a casing having a side wall, an upright grid forming one wall of the refuse compartment and also one wall of an upright flue extending across the incinerator adjacent the compartment and up which products of combustion can pass, said grid having a plurality of vertical bars joined to a horizontal lower bar turned towards the interior of the compartment, and an inclined grid adjacent the casing side wall and having a plurality of upwardly extending bars joined to a lower horizontal bar which extends toward and is normally adjacent the horizontal bar of the first-mentioned grid, said two lower bars forming the lower parts of the floor of said compartment.

9. A refuse incinerator having two oppositely disposed refuse compartments and embodying a casing having two side and two end walls, a two part flue structure in the casing between said compartments, each flue part embodying an upright apertured wall, and a flue between them up which combustion products can pass, said flue structure having an elongated aperture at the bottom of the flue and each flue part adapted to be slid into or out of place independently of the other flue part, said apertured walls each forming a side wall of the refuse compartment adjacent to it, a casing side wall and parts of the casing end walls respectively forming the remaining walls of each refuse compartment, and a burner for fluid fuel immediately under said flue structure aperture.

Signed at New York, in the county of New York and State of New York, this 12th day of December, A. D. 1927.

HARRY L. COWLES.