United States Patent [19]

Oyaba

[11] 3,809,827

[45] May 7, 1974

[54] **MULTIPLE CARTRIDGE TAPE RECORDER/REPRODUCER HEAD SHIFTING ASSEMBLY**

[75] Inventor: **Takashi Oyaba,** Yokohama, Japan

[73] Assignee: **Pioneer Electronic Corporation,** Tokyo, Japan

[22] Filed: **Dec. 7, 1971**

[21] Appl. No.: **205,575**

[30] **Foreign Application Priority Data**

Dec. 7, 1970 Japan ..... 45-121011[U]

[52] **U.S. Cl.** ..... **360/106,** 274/4 F; 4 A

[51] **Int. Cl.** **G11b 21/02,** G11b 21/08

[58] **Field of Search** ..... 274/4 A, 4 B, 4 F, 4 G, 274/11 A, 11 B; 179/100.2 CA, 100.2 Z

[56] **References Cited**

UNITED STATES PATENTS

3,584,879	6/1971	Ban	274/4 F
3,183,494	8/1956	Welsh	179/100.2 Z
3,431,367	3/1969	Nickel	274/4 F
3,001,025	9/1961	Gaubert	274/4 F
3,511,940	9/1963	Lemelson	274/4 F

Primary Examiner—Bernard Konick
Assistant Examiner—David K. Moore
Attorney, Agent, or Firm—Sughrue, Rothwell, Mion, Zinn & Macpeak

[57] **ABSTRACT**

A multiple cartridge tape recorder/reproducer supporting a plurality of independent cartridges has a single transducer fixed to a head plate which is mounted to a rotary plate for rotation about the axis of a feed screw passing through the rotary plate and threadably coupled to the head plate for shifting the head plate and thus the transducer head from transducing position and a second rotary shifted head non-transducing position. A friction wheel mounted to the rotary plate moves into contact with a flywheel to drive the feed screw shaft while axially shifting the transducer head from one cartridge to the other subsequent to simultaneous shifting of the pinch roller from the drive capstan for the tapes and movement of the transducer head to non-transducing position. A lock release cam driven through a gear train from the movable friction wheel pivots the lock plate terminating rotation of the feed screw and permitting pivoting of the rotary plate to a first transducing position allowing the pinch roller to contact the capstan and the transducing head to contact the magnetic tape of the new cartridge.

9 Claims, 5 Drawing Figures

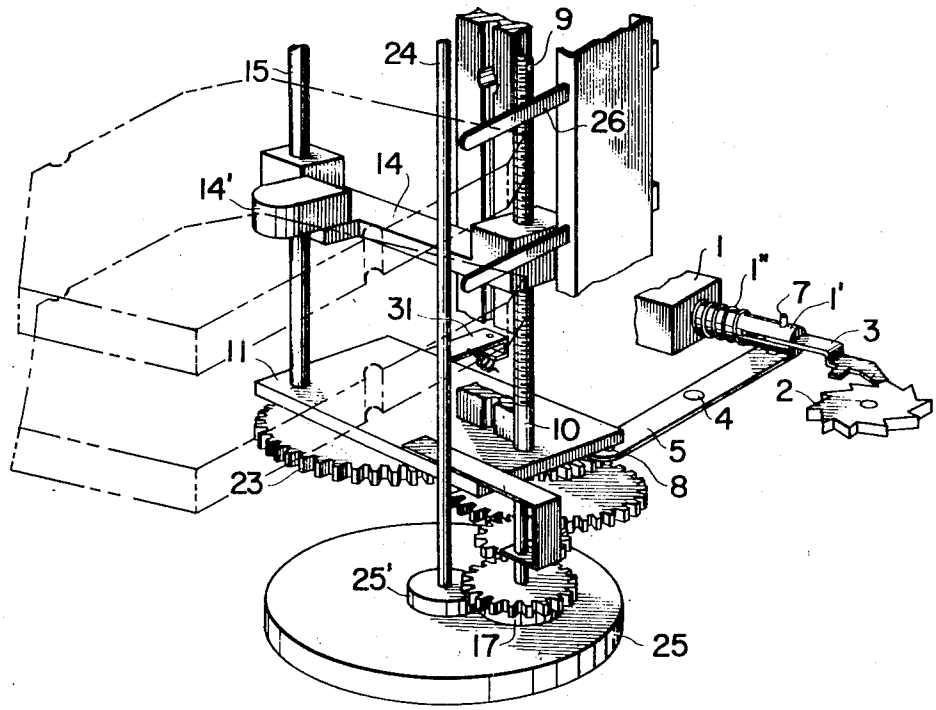

FIG. 1

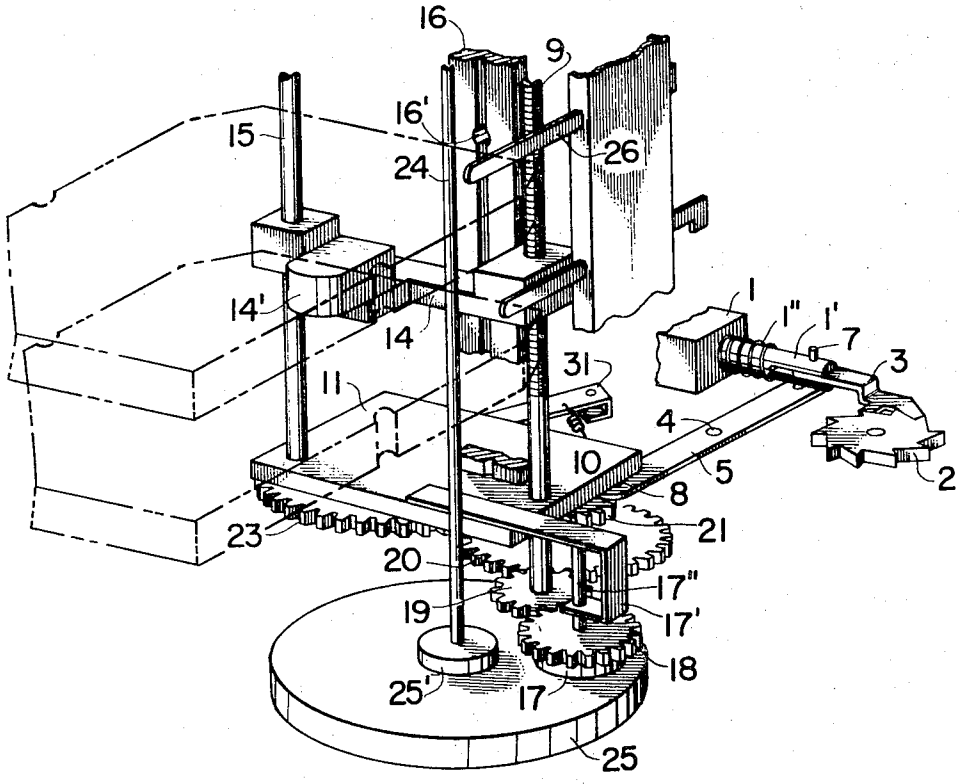
16
9
16'
15
24
26
14'
14
1
1"
1'
7
3
31
11
4
10
5
2
8
23
21
20
17"
19
17'
18
25'
17
25

FIG. 2

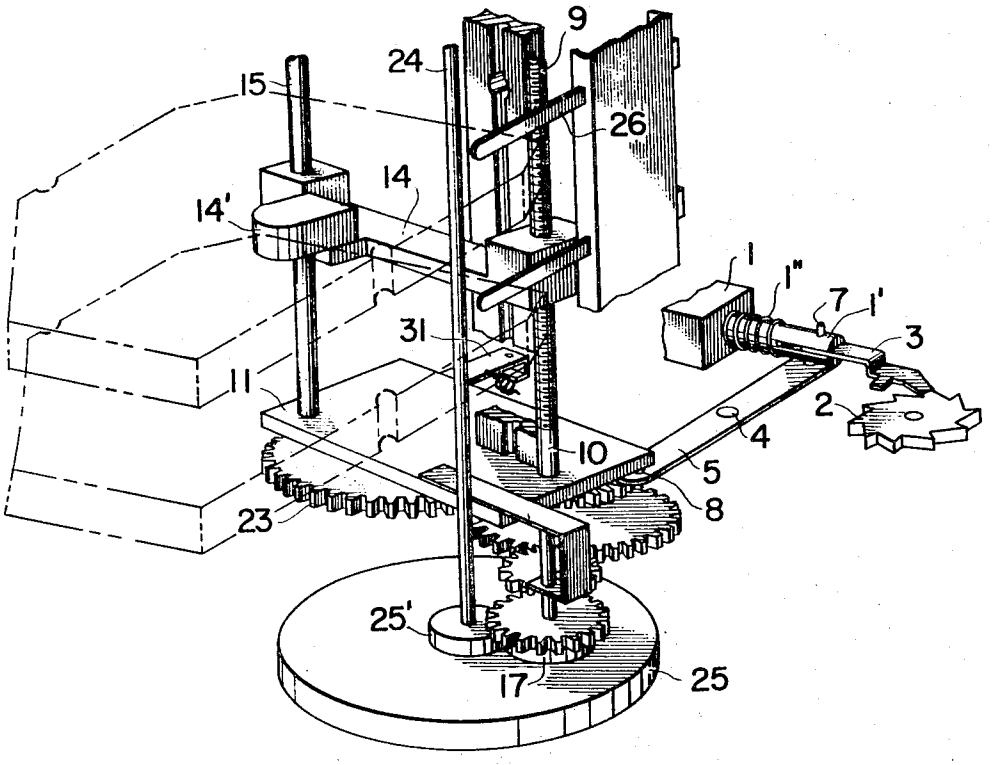

FIG. 3

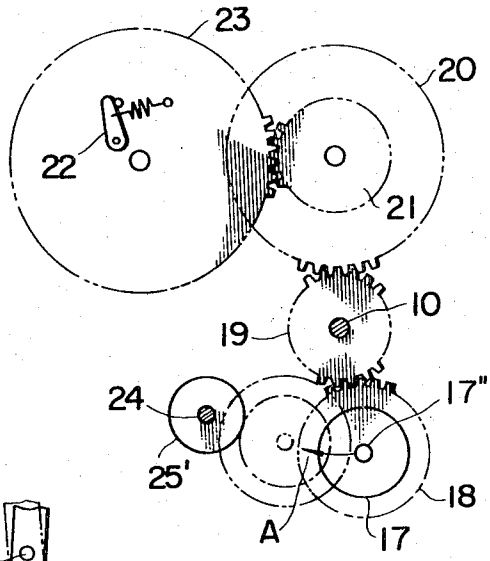

FIG. 4

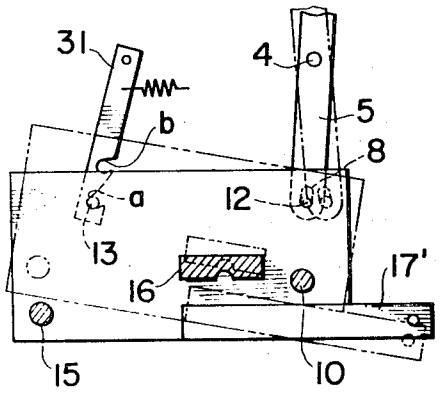

FIG. 5

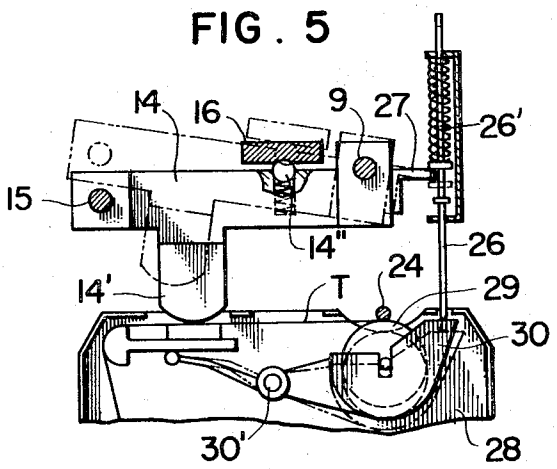

MULTIPLE CARTRIDGE TAPE RECORDER/REPRODUCER HEAD SHIFTING ASSEMBLY

BACKGROUND OF THE INVENTION

FIELD OF THE INVENTION

This invention relates to a multiple cartridge, multi-layer tape recorder/reproducer, and more particularly to a mechanism for shifting the transducer head from cartridge to cartridge in an automatic manner.

SUMMARY OF THE INVENTION

The present invention provides a tape recorder/reproducer having a plurality of cartridges in multi-layer form in which sound is automatically reproduced from the tapes carried by the cartridge by moving the magnetic transducer head in turn from cartridge to cartridge.

According to one aspect of the present invention, there is provided a plurality of independent cartridges in terms of a stacked array which permits recording and reproducing in turn within the multi-layer, multiple cartridge tape recorder/reproducer. The transducer head is fixed to a head plate which in turn threadably engages a feed screw shaft for moving the head plate along the axis of the screw shaft. A rotary plate supports at one end the feed screw shaft and permits the rotary plate and the head plate to rotate together under the operation of a plunger about the axis of the feed screw shaft. A lock plate holds the rotary plate in a first transducing position and in a second non-transducing position. A movable friction wheel which is supported by the rotary plate transmits rotation of the fly wheel to a gear system which in turn is provided with a release cam for releasing the rotary plate from the second non-transducing position for movement to the transducing position. The release cam associated with the gear means is operated under control of the feed screw shaft such that during the time that the movable friction wheel contacts the flywheel and the time the release cam releases the locking plate, the transducing head has shifted axially along the axis of the feed screw from one cartridge to the other and is properly positioned with respect to the new cartridge to reproduce the sound carried thereby. A guide is provided for accurately holding the head plate with respect to the cartridge for proper transducer action. A push rod responsive to rotation of the rotary plate and the head plate from the first position to the second position separates the pinch roller in the cartridge from the capstan at the same time that the transducer head on the head plate moves away from the cartridge when the rotary plate and the head plate are rotated jointly about the axis of the feed screw shaft by a plunger.

Other objects, features and advantages of this invention will become apparent from the following description taken in conjunction with the accompanying drawings.

BRIEF DESCRIPTION OF THE DRAWINGS

FIG. **1** is a perspective view of one embodiment of the multi-layer, multiple cartridge tape recorder/reproducer of the present invention in operating state.

FIG. **2** is a similar perspective view of that portion of the recorder-reproducer illustrated in FIG. **1** under non-transducing operation with the transducer head in retracted position, during axial shifting of the transducer head plate.

FIG. **3** is a schematic plan view of the gear train forming a portion of the apparatus of FIGS. **1** and **2.**

FIG. **4** is a plan view, partially in section, of the plate forming a portion of the apparatus of FIGS. **1** and **2** wherein the dotted line position of the rotary plate illustrates the state where the transducer head is in retracted position.

FIG. **5** is a plan view of the head plate of the apparatus illustrated in FIGS. **1–4,** in conjunction with one of the tape cartridges, the dotted line position being the head retracted position.

DESCRIPTION OF THE PREFERRED EMBODIMENT

Referring to the drawings, one embodiment of a multiple cartridge, multi-layer tape recorder/reproducer incorporating the present invention is illustrated in terms of the components thereof pertinent to the present invention. In FIG. **1,** a pin **7** at the outer end of a movable rod **1'** acts to couple a hook **3** thereto for rotating a rachet **2,** while the same pin **7** is coupled in turn to one end of a lever **5** which rotates about a shaft **4** intermediate of its ends. Plunger **1,** when depressed, causes lever **5** to rotate counterclockwise about pin **4** against the bias of a compression spring **1''.** As shown best in FIG. **4,** a pin **12** which is fixed to the lower surface of rotary plate **11** and depends therefrom, is received within an elongated hole **8** at the opposite end of lever **5** from pin **7.** In turn, the rotary plate **11** is supported by a rotary shaft **10** for pivotable movement about shaft **10,** the shaft **10** being provided with a feed screw portion **9.** The rotary plate **11** is therefore pivoted about the axis of the rotary shaft **10** by movement of lever **5.** As further shown in FIG. **4,** a pin **13** which is also fixed to the lower surface of rotary plate **11** is selectively received within notches a and b of a spring biased pivotable locking plate **31** mounted for pivoting at the end of the lock plate **31** beyond the tension spring, opposite that carrying the notches a and b. A rod **15** acts in conjunction with a block carried by head plate **14** to form a slider guide **15** for elevational movement of head plate **14** in the direction of the axis of shaft **10.** A guide rail **16** fixes the head plate **14** at a predetermined position and an arm **17'** supports a shaft which in turn carries a movable friction wheel **17.** The U-shaped arm **17'** is fixed to the rotary plate **11** and rotates therewith about the axis of shaft **10** so as to cause the friction wheel **17** to contact a driving friction wheel **25'** from which capstan **24** extends and which in turn is coaxial with and fixed to driven flywheel **25.** As illustrated best in FIG. **3,** a gear train includes gear **18** which is integral with the driven friction wheel **17,** gear **18** engaging a gear **19** fixed to the lower portion of feed screw rotary shaft **10,** gear **19** in turn engaging intermediate gear **20,** a small diameter intermediate gear **21** engaging a low speed rotary gear **20** which carries a lock release cam **22** which is spring biased as illustrated. Means not shown are provided for continuously driving the flywheel **25,** the driving friction wheel **25'** and capstan **24.**

As seen in FIG. **5,** a transducer head **14'** is fixed to the head plate **14** which extends between the feed screw portion of shaft **10** and the rod-like guide **15** whose bottom end is fixed to the rotary plate **11.** At the right end of the head plate **14** is provided an abutment

27 which controls the projected position of a spring biased push rod 26 which controls the depression of a spring biased pinch roller holder 30, the pinch roller holder 30 rotatably carrying a pinch roller 29 which acts to press the tape T into contact with the continuously driven capstan 24, thus driving the tape past the transducer head 14' for recording and/or reproduction purposes. A recess 16' within the vertical guide rail 16 permits a spring biased ball 14'' to be partially received thereby to stop the head plate 14 at a correct height after being driven to the same by the rotating shaft 10 and in particular the feed screw portion 9 by the upper end of the same. There is some play in the engagement of the head plate 14 with the feed screw portion 9 of shaft 10; as illustrated in FIG. 5, a cartridge lies opposite to the head 14', the cartridge supporting the pinch roller 29 on the pinch roller holder such that the push rod 26 depresses the holder and thus the pinch roller 29 to the dotted line position when released by the abutment 27 under the spring bias of the compression spring 26'. Otherwise, the pinch roller 29 is urged resiliently towards the capstan to press a tape T against the same.

In operation, when the plunger 1 is depressed, the ratchet wheel 2 is operated by hook 3 so that movement of the head is indicated by means (not shown) and at the same time the lever 5 rotates counterclockwise about shaft 4 to rotate rotary plate 11 clockwise about shaft 10 by means of pin 12 in such a manner that pin 13 is removed from notch a of the lock plate 31 permitting rotation of the rotary plate 11 to the dotted line position, FIG. 4, with pin 13 moving into notch b of the lock plate 31 and to terminate further rotation of the rotary plate 11. When the rotary plate 11 is rotated clockwise to the dotted line position as shown in FIG. 5, the transducer head 14' fixed to the head plate 14, is separated from the tape T and moved away from the cartridge as indicated in the dotted line position, while at the same time the abutment 27 moves forward in conjunction with the pivot axis defined by rotary shaft 10 (toward the bottom of the drawing), FIG. 5, so as to urge the end of the pinch roller holder 30 to the dotted line position, thus separating the pinch roller 29 from the capstan 24. Further, shaft 17'' which supports the movable friction wheel 17 on the end of arm 17' shifts due to rotation of rotary plate 11 in the direction designated by arrow A, FIG. 3, by clockwise rotation of rotary plate 11 to the point where the friction wheel 17 moves into contact with the driving friction wheel 25' integral with flywheel 25. Friction wheel 17 in turn receives the rotary effort of the flywheel such that the gear 19 fixed to the bottom of shaft 10 rotates to rotate the feed screw portion 9 defining the upper portion of shaft 10 and to thereby raise, that is, axially shift head plate 14 to elevate the transducer head 14'. The gear 19 through intermediate gears 20 and 21 rotates the low speed rotary gear 23 to cause the lock release cam 22 to contact the end of lock plate 31 to release the pin 13 from notch *b* and allow it to move to notch *a*, the rotary plate 11 rotating counterclockwise due to the pressure of compression coil spring 1'', pin 13 engaging notch a to stop the rotation of the rotary plate 11 in the full line position, FIG. 4. During counterclockwise rotation of plate 11, the movable friction wheel 17 separates from the driving friction wheel 25' to terminate rotation of the feed screw portion 9 and to thus terminate the elevation of the head plate 14. However, the spring biased ball 14'' of the head plate 14 engages recess 16' of the rail and thus stops the head plate 14 at a new position directly opposite the next cartridge so that the magnetic transducer head 14' is correctly disposed at a height which corresponds to the magnetic tape of the new cartridge. The play between the feed screw portion 9 and the head plate insures proper engagement of ball 14'' with recess 16'. The low speed rotary gear 23 rotates one full revolution while the head plate 14 is raised one cartridge position. Simultaneously, during rotation of the rotary plate 11 counterclockwise, head 14' is advanced towards the next cartridge 28 to contact the tape T while at the same time the push rod 26 of the next cartridge is retracted so that the pinch roller 29 interleaves the tape T between the roller 29 and the capstan 24 to permit the playing of the tape of the new cartridge. After all of the multi-layer cartridges, that is, the complete stacked array, are played in turn, from the lowest one to the uppermost one, the plunger 1 is operated so that the head 14' is separated from the last plate cartridge, the flywheel 25 is then inversely rotated so that the head 14' is lowered to the lowermost cartridge. The lock release cam 22 on the surface of the pivotable arm carried by the rotary gear 23 is drawn to such a position by the tension spring as indicated in FIG. 3 as to be located against a stop with the result that when it inversely contacts the lock plate 31 it does not act as a cam in the earlier sense, and lock plate 31 is not adversely affected during this inverse operation of the apparatus, that is, during return of the transducer head to its lowest position.

From the above description and according to the present invention, it is obvious that the cartridges are, in turn, played by axially shifting the magnetic head without the necessity of moving any of the cartridges and a number of cartridges are automatically played in turn in the order in which they are mounted within the recorder/reproducer.

What is claimed is:

1. In a magnetic tape recorder/reproducer having a stacked array of independent cartridges for magnetic recording and reproducing, in turn, the improvement comprising:

a rotary plate,

a feed screw passing through said rotary plate and defining a pivot axis for the same,

a head plate fixedly supporting a transducer head and mounted on said rotary plate for common rotation therewith about said feed screw shaft axis, said feed screw shaft being threadedly coupled to said head plate for effecting axial shifting of said head plate to raise and lower said transducer head relative to said stacked array of cartridges,

a lock plate for holding said rotary plate in a first head transducing position and a second head non-transducing position rotated therefrom,

means responsive to rotation of said rotary plate to said second position for driving said feed screw to an extent resulting in axial shifting on said head plate from alignment with one cartridge to alignment with the next, and

means automatically responsive to such axial shifting of said head plate to release said lock plate permitting said rotary plate to move from said second position to said first position, placing said transducing head in operative position relative to said new cartridge.

2. The recorder/reproducer as claimed in claim 1, further comprising: a constantly rotating capstan extending the length of the stacked array of cartridges and wherein each cartridge includes a movable pinch roller, and said recorder/reproducer further includes means responsive to rotation of said rotary plate to said second position to pivot said pinch rollers to non-capstan contact position.

3. The recorder/reproducer as claimed in claim 2, further comprising:

a rotary drive friction wheel supporting said capstan and rotating with the same,

a driven friction wheel, mounted for rotation about its axis and supported on said rotary plate for movement therewith about the axis of said rotary shaft, so as to contact said driving friction wheel when said rotary plate is in said second non-transducing position,

a gear train coupling said driven friction wheel to said feed screw for raising and lowering said head plate, said gear train further including a low speed driven gear having a lock release cam thereon, said lock release cam being operatively positioned with respect to said lock plate to pivot said lock plate to release said rotary plate from said second non-transducing position for rotation to said first head transducing position upon axial shifting of said transducer head from vertical operative alignment with one cartridge to vertical operative alignment with the next adjacent cartridge.

4. The recorder/reproducer as claimed in claim 2, further comprising:

a spring biased plunger,

a pivotable lever, and

means coupling one end of said lever to said plunger and said other end of said lever to said rotary plate,

whereby depression of said plunger against the bias of said spring pivots said rotary plate from said first head transducing position to said second non-transducing position.

5. The recorder/reproducer as claimed in claim 4, further comprising:

a rotary drive friction wheel supporting said capstan and rotating with the same,

a driven friction wheel, mounted for rotation about its axis and supported on said rotary plate for movement therewith about the axis of said rotary shaft, so as to contact said driving friction wheel when said rotary plate is in said second non-transducing position,

a gear train coupling said driven friction wheel to said feed screw for raising and lowering said head plate, said gear train further including a low speed driven gear having a lock release cam thereon, said lock release cam being operatively positioned with respect to said lock plate to pivot said lock plate to release said rotary plate from said second non-transducing position for rotation to said first head transducing position upon axial shifting of said transducer head from vertical operative alignment with one cartridge to vertical operative alignment with the next adjacent cartridge.

6. The recorder/reproducer as claimed in claim 2, wherein said means for pivoting said pinch roller to non-capstan contact position comprises a spring biased push rod, said pinch roller is supported by a spring biased, pivotable pinch roller holder, said head plate including an abutment, said push rod tends to move said pinch roller holder to non-capstan contact position, and said abutment contacts said push rod to move the push rod away from said pinch roller holder during pivoting of said head and to transducing position.

7. The recorder/reproducer as claimed in claim 6, further comprising:

a rotary drive friction wheel supporting said capstan and rotating with the same,

a driven friction wheel, mounted for rotation about its axis and supported on said rotary plate for movement therewith about the axis of said rotary shaft, so as to contact said driving friction wheel when said rotary plate is in said second non-transducing position,

a gear train coupling said driven friction wheel to said feed screw for raising and lowering said head plate, said gear train further including a low speed driven gear having a lock release cam thereon, said lock release cam being operatively positioned with respect to said lock plate to pivot said lock plate to release said rotary plate from said second non-transducing position for rotation to said first head transducing position upon axial shifting of said transducer head from vertical operative alignment with one cartridge to vertical operative alignment with the next adjacent cartridge.

8. The recorder/reproducer as claimed in claim 6, further comprising:

a spring biased plunger,

a pivotable lever, and

means coupling one end of said lever to said plunger and said other end of said lever to said rotary plate,

whereby depression of said plunger against the bias of said spring pivots said rotary plate from said first head transducing position to said second non-transducing position.

9. The recorder/reproducer as claimed in claim 8, further comprising:

a rotary drive friction wheel supporting said capstan and rotating with the same,

a driven friction wheel, mounted for rotation about its axis and supported on said rotary plate for movement therewith about the axis of said rotary shaft, so as to contact said driving friction wheel when said rotary plate is in said second non-transducing position,

a gear train, coupling said driven friction wheel to said feed screw for raising and lowering said head plate, said gear train further including a low speed driven gear having a lock release cam thereon, said lock release cam being operatively positioned with respect to said lock plate to pivot said lock plate to release said rotary plate from said second non-transducing position for rotation to said first head transducing position upon axial shifting of said transducer head from vertical operative alignment with one cartridge to vertical operative alignment with the next adjacent cartridge.

* * * * *