PCT WORLD INTELLECTUAL PROPERTY ORGANIZATION
International Bureau

INTERNATIONAL APPLICATION PUBLISHED UNDER THE PATENT COOPERATION TREATY (PCT)

(51) International Patent Classification 5 : A61B 17/00 — A1

(11) International Publication Number: WO 94/16629

(43) International Publication Date: 4 August 1994 (04.08.94)

(21) International Application Number: PCT/US94/00994

(22) International Filing Date: 27 January 1994 (27.01.94)

(30) Priority Data:
08/009,470 27 January 1993 (27.01.93) US

(71) Applicant: INSTENT INC. [US/US]; 6271 Bury Drive, Eden Prairie, MN 55346 (US).

(72) Inventors: BEYAR, Mordechay; 196 C Arlozorov Street, 64 923 Tel Aviv (IL). GLOBERMAN, Oren; Yericho 14, 58 543 Holon (IL). BEYAR, Rafael; 8 Watson Street, 34 751 Haifa (IL).

(74) Agent: DIPPERT, William, H.; Cowan, Liebowitz & Latman, 605 Third Avenue, New York, NY 10158 (US).

(81) Designated States: AU, CA, JP, European patent (AT, BE, CH, DE, DK, ES, FR, GB, GR, IE, IT, LU, MC, NL, PT, SE).

Published
With international search report.

(54) Title: VASCULAR AND CORONARY STENTS

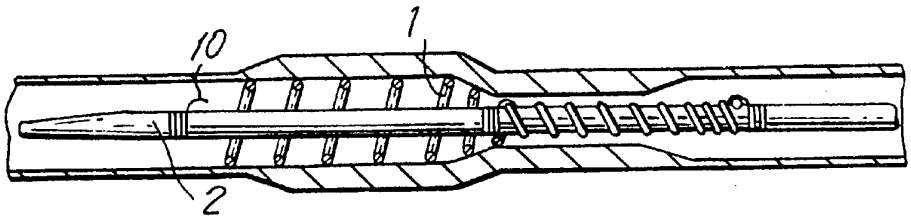

(57) Abstract

This invention is directed to a stent delivery system for implanting a flexible, generally cylindrical, expandable, coiled stent. The system comprises a catheter defining at least one lumen and having at least two longitudinally displaced openings or sets of openings, a flexible, self-expandable coiled stent (20) having discrete proximal (25) and distal end sections (24), said stent being wound circumferentially around said catheter and coils of the stent being more closely wound at the proximal and/or distal end sections, and one or two release wire (26) cooperating with restraining means (51) so that as the release wire or wires are withdrawn proximally, the proximal and distal end sections of stent are released in such a manner that coils of the stent unwind and the length of the unwound stent is not substantially less than the length of the portion of the unreleased stent that is not more closely wound.

FOR THE PURPOSES OF INFORMATION ONLY

Codes used to identify States party to the PCT on the front pages of pamphlets publishing international applications under the PCT.

AT	Austria	**GB**	United Kingdom	**MR**	Mauritania
AU	Australia	**GE**	Georgia	**MW**	Malawi
BB	Barbados	**GN**	Guinea	**NE**	Niger
BE	Belgium	**GR**	Greece	**NL**	Netherlands
BF	Burkina Faso	**HU**	Hungary	**NO**	Norway
BG	Bulgaria	**IE**	Ireland	**NZ**	New Zealand
BJ	Benin	**IT**	Italy	**PL**	Poland
BR	Brazil	**JP**	Japan	**PT**	Portugal
BY	Belarus	**KE**	Kenya	**RO**	Romania
CA	Canada	**KG**	Kyrgystan	**RU**	Russian Federation
CF	Central African Republic	**KP**	Democratic People's Republic of Korea	**SD**	Sudan
CG	Congo			**SE**	Sweden
CH	Switzerland	**KR**	Republic of Korea	**SI**	Slovenia
CI	Côte d'Ivoire	**KZ**	Kazakhstan	**SK**	Slovakia
CM	Cameroon	**LI**	Liechtenstein	**SN**	Senegal
CN	China	**LK**	Sri Lanka	**TD**	Chad
CS	Czechoslovakia	**LU**	Luxembourg	**TG**	Togo
CZ	Czech Republic	**LV**	Latvia	**TJ**	Tajikistan
DE	Germany	**MC**	Monaco	**TT**	Trinidad and Tobago
DK	Denmark	**MD**	Republic of Moldova	**UA**	Ukraine
ES	Spain	**MG**	Madagascar	**US**	United States of America
FI	Finland	**ML**	Mali	**UZ**	Uzbekistan
FR	France	**MN**	Mongolia	**VN**	Viet Nam
GA	Gabon				

VASCULAR AND CORONARY STENTS

FIELD OF THE INVENTION

This invention is directed to a device for the treatment of constricted ducts in human bodies. More particularly, this invention is directed to a vascular or coronary stent and a system for inserting or implanting it.

BACKGROUND OF THE INVENTION

Numerous stents are known to be useful for insertion into the body. Known stents include balloon expandable stents, as represented, for example, by U.S. Patents Nos. 5,108,416, 4,735,665, and 4,739,762, as well as self-expandable stents formed from coiled material. See, for example, U.S. Patents Nos. 4,913,141, 4,768,507, and 4,580,568. With regard to any of these stents, particularly the coiled stents, expansion normally causes the length of the stents to decrease during insertion or implantation. This can be a distinct disadvantage with regard to precise positioning of such stents. There is a definite need for stents that either shorten only a minimal amount or shorten in a predictable manner, to facilitate more precise positioning within the body.

OBJECTS OF THE INVENTION

It is an object of this invention to provide a stent for treating constricted ducts.

It is also an object of this invention to provide a vascular or coronary stent and a system for deploying same.

It is a further object of this invention to provide a wound coil stent which does not significantly shorten along its length during deployment of the stent, or shortens in a predictable manner.

These and other objects of the invention will become more apparent in the discussion below.

BRIEF DESCRIPTION OF THE DRAWINGS

Figs. 1 to 5 represent partially cross-sectional views of an embodiment of the invention shown in successive stages of release;

Figs. 6 to 9 represent partially cross-sectional views of another embodiment of the invention shown in successive stages of release;

Figs. 10 and 12 represent oblique, partially cross-sectional views of a fixation point;

Fig. 11 represents a cross-sectional view of a band portion;

Figs. 13, 14, 15, and 16 each represent a view of a release mechanism;

Figs. 16A, 16B, and 16C represent cross-sectional views of portions of the release member of Fig. 16;

Figs. 17 and 18 represent cross-sectional views of catheters useful according to the invention; and

Figs. 19 and 20 represent oblique, partially cross-sectional views of a fixation point.

DETAILED DESCRIPTION OF THE INVENTION

This invention is directed to a stent and stent delivery system that overcomes the disadvantages of prior art stents and stent delivery systems in that the stent does not appreciably shorten in its length relative to its pre-mounted length, or shortens in a predictable manner, during deployment of the stent. Also, the center of the stent either stays in the same place it was before release from the catheter or is predictably relocated. The stent delivery system comprises a coiled stent removably fixed to a delivery catheter. The stent is affixed to the delivery catheter at three separate points, that is, at the middle of the stent and at the distal and proximal ends of the stent, or at two separate points, the proximal and distal ends of the stent. At one or both of the ends where the stent is affixed to the catheter, the stent is more tightly wound, i.e., has more pitch per unit length. The stent is preferably released by sequential release of the stent at its distal end, at its proximal end, and, optionally, then at its middle. It is also possible to release first its proximal end, then its distal end, and finally its middle. When the stent is more tightly wound only at one end, the stent is only held at two points. Then, the center of the stent relocates in predictable fashion as the stent unwinds after release.

The stent and stent delivery system of the invention intended for vascular or coronary application can perhaps be more appreciated by making reference to the drawings. In Fig. 1, the stent delivery system, preferably for vascular application, is in its pre-release condition where the coiled stent 1 is affixed to delivery catheter 2 at distal fixation point 3, middle fixation point 4,

and proximal fixation point 5. Stent 1 is more tightly wound at distal section 6 and proximal section 7.

The stent 1 can be releasably affixed to catheter 2 by use of several different methods known in the art. Preferably the affixation consists of a loop locking mechanism 10 that extends over a respective portion, that is, one or more coils, of catheter 1 through an opening in the outer surface of catheter 2 to be restrained by one or more restraining means or wires 11 within one or more lumens within catheter 2. Such restraining means are discussed in more detail below.

It is also within the scope of the invention that other locking or restraining means could be employed to affix stent 1 to catheter 2. For example, a system such as is shown in U.S. Patent No. 4,913,141, or in co-pending, commonly assigned U.S. patent applications Ser. No. 07/781,174, filed December 11, 1991, Serial No. 07/805,737, filed December 10, 1991, and Serial No. 07/827,031, filed January, 24, 1992, all of which are incorporated herein by reference, could be employed as well.

To take full advantage of the stent delivery system described herein, stent 1 should be sequentially released from catheter 2, as shown in Figs. 2 to 4. Preferably the distal section 6 of stent 1 is released, the proximal section 7 is released, and then the middle section 8 of stent 1 is released at fixation point 4. After release of the distal end of the stent 1, stent 1 starts to open, i.e., unwind, from the distal side towards the middle. Contact of the stent wire with the inner wall 12 of blood vessel 13 forms an indentation or groove in vessel wall 12 with a pitch corresponding to that of the tightly wound stent. However, because the rotating stent increases in diameter, its length decreases slightly in

the direction of the middle, and the tight winding of the end of the stent disappears. The middle section 8 of released stent 1 will be positioned at, or substantially identically at, the same place as before stent 1 was released, i.e., at fixation point 4. Following release at all three fixation points, catheter 2 is withdrawn, as shown in Fig. 5.

The unwound, released stent 1 shown in Fig. 5 has a longitudinal length substantially identical to the premounted length of the stent. This length is also equal to approximately 55 to 110%, preferably from about 60 to 100%, of the total length of the wound, pre-release stent shown in Fig. 1. This relationship will vary dependent upon many factors, such as the tightness of the coils, the stent material, the body tube diameter prior to the stent deployment, and the stent diameter. The middle of the released stent will be positioned at substantially the same location as the coiled stent prior to release, assuming the catheter itself hasn't moved as the stent releases.

The winding of stent 1 is configured so that the stent is more closely wound at fixation points 3 and 5, although stent 1 as released expands to uniform winding, as shown in Fig. 5. For example, if the winding of released stent 1 might consist of 15 coils per inch of length, the compressed winding at points 3 and 5 could consist of 20 to 45 coils per inch. It is within the scope of the invention that the tightness, i.e., the distance between the coils, of the coils as well as the length of the closely wound coil sections could be adjusted dependent upon the particular application intended. By the appropriate combination of wound and more tightly wound coils, one skilled in the art should be able to easily achieve situations wherein the released

stent 1 will have substantially the same length as pre-mounted coil 1.

Another embodiment of the invention, preferably intended for coronary use, is shown in Figs. 6 to 9. In Fig. 6, the stent delivery system is shown in its pre-release condition where the coiled stent 20 is affixed to delivery catheter 21 at distal fixation point 22 and proximal fixation point 23. Stent 20 is more tightly wound at distal section 24, and stent 20 is releasably affixed to catheter 21 by the methods discussed above and below. The differences in winding between distal section 24 and the remainder of stent 20 is similar to the differences described above for stent 1. It is within the scope of the invention that stent 20 may instead be more tightly wound only at proximal section 25 or at both distal section 24 and proximal section 25; however, preferably stent 20 is more tightly wound at distal section 24.

Stent 20 is released from catheter 21 by sequential release of distal section 24 of stent 20 and then proximal section 25. When distal section 24 is released, stent 20 begins to unwind and expand radially, starting from the distal end, and the individual coil expansion moves in the proximal direction, as shown in Figs. 7 and 8. Once proximal section 25 is released (Fig. 9), stent 20 is substantially expanded throughout its length. The longitudinal length of released stent 20 is substantially the same as the length of the pre-released stent, or the less dense portion of the mounted stent, which is, in turn, from about 55 to 110%, preferably from about 60 to 95%, of the total length of wound, pre-release stent 20. Optionally, if proximal section 25 was more tightly wound, proximal section 25 could be released first,

whereby the coil unwinding would move in the distal direction, and then distal section 24 would be released.

When the stent 20 is affixed to the delivery catheter 21 at only two points, the release sequence preferably depends upon which end or ends of the stent are more tightly wound. One of sections 24 and 25 can be more tightly wound, and then that end of the stent is released first. Regardless of which closely wound end is released first, the middle of released stent 20 should be positioned in substantially the same place, if not the identical place, as the middle portion of the less tightly wound section of the unreleased stent, assuming that the catheter doesn't move during the stent release. At the very least with this configuration it will be possible to reliably predict where the middle of the released stent will be located.

The stent delivery system shown in Figs. 6 to 9 may comprise one or two release wires 26. When one release wire is used, first distal section 24 and then proximal section 25 are released. However, if it is desired (1) to release both sections 24 and 25 simultaneously or more closely together than would be possible if only one release wire were used or (2) to release proximal section 25 before distal section 24, then two release wires 26 would be used. Also, as noted above, in another embodiment of the invention proximal section 25 may be more closely wound than the remainder of stent 20, including distal section 24. Preferably proximal section 25 would then be released at the same time as or before distal section 24.

The catheter itself could be comprised of any polymeric material suitable for such catheters. Useful materials include polyethylene, polyurethane, polypropylene, and co-polymers therewith. Preferably catheter

2 or 21 has a decreased diameter in the area of the catheter where stent 1 or 20 is mounted, to enable the delivery system to have a lower profile at that point, comparable to the diameter of the remainder of the catheter 2 or 21. Also, catheter 2 or 21 preferably has grooves on its outer surface that correspond to the coils of wound stent 1 or 20.

Likewise, the release wires useful herein can be comprised of any physiologically acceptable polymer or metal suitable for such purpose. Stainless steel wires are especially useful in this regard.

In the aspect of the invention set forth in Fig. 10, the respective distal and proximal ends and the middle of a stent 50 are restrained by a restraining means 51 comprising a band 52 and a fixation member 53. Band 52 and fixation member 53 are comprised of a continuous flexible fiber that extends through opening 58 and is looped around release wire 54, and is then intertwined to form fixation member 53, which passes over the external surface of stent 50, which has ball 59. Respective sections of the flexible fiber are wound around catheter 57 in opposite directions one or more times to form band 52 and are half-knotted when the sections intersect, such as at intersection points 59. The ends of the flexible fiber are secured together with glue, preferably at a point closure 60 opposite to opening 58. A cross-sectional view of this arrangement is shown in Fig. 11.

In Fig. 12 a continuous flexible fiber extends through opening 62 and is looped around release wire 63. Sections of the flexible fibers are intertwined to form a fixation member 64 that passes over the external surface of stent 65 and then into opening 66, where the intertwined sections loop under release wire 63. As the flexible fiber sections extend radially after looping

around the release wire 63, they are half-knotted directly above release wire 63 and then separated to be independently and oppositely wound around catheter 67. The respective sections are half-knotted when they meet at intersection point 68, and the ends are fixed together with glue as in Fig. 11.

In operation either there is an additional lumen for another release wire or lumen 55 is large enough to contain two release wires that are operated independent of one another. One release wire would release the proximal and distal ends of stent 1, and the other release wire would release the middle section of stent 1, or one release wire will release the distal and middle sections and the other release wire will release the proximal section.

Another restraining mechanism 71 is shown somewhat more clearly in Fig. 13. Preferably fixation member 72 has a weld, solder, or glue member 73 that decreases the size of the opening 74 within fixation member 72, to ensure that a ball 59 at the end of the stent 50 does not become caught in said opening after stent deployment within the body duct.

It would be appreciated by one skilled in the art that loop 72 and band 75 could have various functional equivalents, such as, for example, the embodiments shown in Figs. 14 and 15. In Fig. 14, a continuous closed piece of metal or polymer wire 80 has a weld 81 that defines loop 82 with opening 83 and effective band member 84. Such a material could be comprised of any physiological acceptable or medically acceptable wire of appropriate flexibility, preferably having a diameter of from about 0.05 to 0.4 mm.

In the band or restraining mechanism shown in Fig. 15, a flexible strand of material has been arranged to

define loop 85, with opening 87, and band 86. Such a strand could be comprised of any suitable flexible material such as silk, string, an appropriate polymer, or even small diameter solid or braided wire.

An additional embodiment of a restraining mechanism is shown in Fig. 16, wherein the restraining mechanism 90 comprises band 91, connector 92, and loop 93. Loop 93 defines opening 94. Preferably, band 91 and loop 93 have circular or oval cross-sections and connector 92 has a rectangular cross-section. Restraining mechanism 90 is preferably comprised of a suitable polymer or co-polymer selected from the group consisting of nylon, polyethylene, polypropylene, polyvinylchloride, and co-polymers of one or more of these polymers. It is within the scope of the invention that restraining mechanism 90 could be comprised of two separate polymers; for example, band 91 would be made of a rigid polyethylene/polypropylene co-polymer whereas connector 92 and loop 93 would be made from a more flexible polymer such as polyethylene.

The catheters useful according to the invention must have at least one lumen suitable for release means, which lumen has two or more openings or sets of openings extending to the exterior surface of the catheter to permit interaction with fixation members. At each fixation point there may be 1 or 2 openings, dependent upon the release means employed. (Compare Figs. 11 and 13.) The catheter may comprise a single, concentric, longitudinally extending lumen, or it may comprise one or more eccentric, longitudinally extending lumens.

In the cross-sectional view of Fig. 12, catheter 57 comprises main lumen 56 and side lumen 55, which contains release wire 54. Catheter 57 could instead comprise a single lumen 55, which could be eccentric or concentric

within catheter 57. Also, the release wire-containing lumen could contain more than one release wire 54, possibly two or even three release wires if desired.

Additional cross-sectional views of catheters are shown in Figures 17 and 18. Catheter 100 comprises main lumen 101 and side lumens 102, the latter of which each may contain a release wire 103. Similarly, catheter 105 comprises main lumen 106 and side lumen 107, which latter lumen contains one to three release wires 108.

In some embodiments of the invention, especially a biliary stent, a middle restraining means is advantageous. However, because this stent can be closely wound even at its maximum, released diameter, the above-described arrangements are not necessarily as effective as desired. It has been found that a novel arrangement employing a bioabsorbable (or biosorbable) wire straining member is quite effective, particularly because the loops of the stent press the middle restraining means and prevent it from "jumping up," that is, away from the catheter surface. According to the embodiment of the invention set forth in Figs. 19 and 20, a release wire 120 extends through side lumen 121 where it intersects biosorbable restraining member 122, which cooperates with release wire 120 to restrain stent member 123. Loop member 122 can be configured in two different ways: As shown in Fig. 19, restraining member 122 encompasses stent member 123, so that when release wire 120 is withdrawn proximally to release restraining member 122 and stent member 123, restraining member remains with stent member 123 or, if stent member 123 were a distal or proximal portion of stent 124, loop member 122 may disengage from stent 124. Alternatively, as shown in Fig. 20, restraining member 125 is configured so that the respective ends 126 of restraining member 125 are engaged

by release wire 120. Therefore, when release wire 120 is pulled proximally, the ends 126 of restraining member 125 are disengaged from release wire 120, such that stent member 127 is also disengaged and stent 128 unwinds. Restraining member 125 may then dissociate from stent 128.

Restraining member 122 or 125 comprises a non-toxic, physiologically acceptable material that is preferably biosorbable. Therefore, whether the arrangement of Fig. 19 or Fig. 20 is employed, restraining member 122 or 125 will be absorbed by or passed through the body, and it will not matter if restraining member 122 or 125 remains engaged by the stent or not. Suitable materials are well known to those skilled in the art and would include other materials presently useful for other medical applications, including, but not limited to, the materials used in absorbable sutures such as homo- and copolymers of glycolic acid. See, for example, the materials disclosed in Kirk-Othmer, Encyclopedia of Chemical Technology, 2d Ed., Vol. 22, pages 433 et seq., incorporated herein by reference. Examples of such materials are DEXON™ PLUS and DEXON™ "S", available from David + Beck, Inc. of Puerto Rico.

The stent delivery systems described herein are intended to be useful for the stents shown as well as other expandable stents. A preferred stent, such as that shown here, is described in detail in co-pending, commonly assigned U.S. patent applications Serial No. 07/781,174, filed December 11, 1991, and Serial No. 07/827,031, filed January 24, 1992, both of which are incorporated herein by reference.

More specifically, the preferred stent comprises a spatial spiral (helix) wound of wire of a material tolerated by the human body and which, furthermore, is

not corroded or otherwise attacked by body fluids. Such a material, also known as a physiologically or medically acceptable material, could be one or more of several materials known for this purpose. Especially useful here are metals such as stainless steel, gold-plated medical grade stainless steel, stainless steel coated with silicone, bicarbon, or polytetrafluoroethylene, such as TEFLON®, tantalum, titanium, superelastic alloy such as nickel-titanium (Ni-Ti) alloys (commercially available as Nitinol or Tinel), a shape memory polymer, such as are described in U.S. Patent No. 5,163,952, incorporated herein by reference, or bioabsorbable polymer material such as a saccharide or other biocompatible, non-toxic polymer taught by U.S. Patent No. 5,141,516, incorporated herein by reference. The wire typically is circular in cross-section with a diameter of from about 0.1 to 1.0 mm, preferably from about 0.15 to 0.60 mm. Also, a wire cross-section of ellipsoidal, rectangular, rectangular with step, or S-shape geometry is suitable for stent production.

The preferred stent useful herein has thickened regions at the distal and proximal ends of the stent. In the text above reference is made to "ball 59"; however, each ball 59 can be spherical or non-spherical, so long as the "ball" functions as described. For example, in the embodiment shown in Figs. 11 and 13, the "ball 59" could merely be a non-spherical thickened area, such as an egg, cone, or tear-drop shape, or a functionally equivalent loop, hole, or hook, that would cooperate with loop 53 to restrain an end of the stent. The ball 59 may be flattened on its inner and/or outer surface to facilitate the stent being in better contact with the outer surface of the catheter, to enable the mounted stent profile to be narrower.

The outer diameter and length of the stent will vary according to the intended use. For vascular or coronary use, the outer diameter of the wound stent will typically be from about 5 to 30 French (from about 1.7 to 10.0 mm), and the length of the stent can vary from about 2 to 15 cm, preferably from about 4 to 12 cm. It is also within the scope of the invention that the stent may comprise two spirals connected by a wire, the spirals and wire preferably being a continuous wire, or welding at respective distal and proximal ends.

A special property of nickel-titanium alloy (Nitinol) can be used for the production of the stent. Nickel-titanium alloy can have superelasticity at temperatures in the neighborhood of body temperature (37°C). The term "superelasticity" is used to describe the property of certain alloys to return to their original shape upon unloading after substantial deformation. Superelastic alloys can be strained up to eight times more than ordinary spring materials without being plastically deformed. Such superelasticity would enable one to compress the stent to a very small diameter over the delivery catheter.

The preceding specific embodiments are illustrative of the practice of the invention. It is to be understood, however, that other expedients known to those skilled in the art or disclosed herein, may be employed without departing from the spirit of the invention or the scope of the appended claims.

WE CLAIM:

1. A stent delivery system for implanting a flexible, generally cylindrical, self-expandable stent, comprising:

a catheter having distal and proximal ends, said catheter defining at least one lumen extending therethrough and having at least two longitudinally displaced openings or sets of openings extending from a lumen to the surface of the catheter,

a flexible, self-expandable coiled stent having discrete proximal and distal end sections, said stent being wound circumferen-tially around said catheter and coils of the stent being more closely wound at the proximal and/or distal end sections, and having restraining means holding each of the proximal and distal end sections of the stent to the catheter, and

one or two release wires positioned in and extending longitudinally through at least one lumen, said release wires cooperating with the restraining means so that as the release wire or wires are withdrawn proximally, the proximal and distal end sections of the stent are released in such a manner that coils of the stent unwind and the length of the unwound stent is not substantially less than the length of the portion of the unreleased stent that was not tightly wound.

2. The system of Claim 1, wherein there are at least three longitudinally displaced openings or sets of openings extending from a lumen to the exterior surface of the catheter and the middle section is held to the catheter by a restraining means.

3. The system of Claim 1, wherein the catheter defines a central lumen and one or more side lumens having the longitudinally displaced openings or sets of openings extending to the exterior surface of the catheter.

4. The system of Claim 1, wherein each restraining means comprises a loop member having an opening therein.

5. The system of Claim 4, wherein each loop member is positioned across the external surface of the stent.

6. The system of Claim 4, wherein each loop member is positioned around a release wire on each side of a stent coil section.

7. The system of Claim 4, wherein when the release wire or wires are pulled proximally, each loop member disengages from the release wire or wires to release the stent, and the stent uncoils.

8. The system of Claim 1, wherein the stent is comprised of superelastic shape memory alloy, a shape memory polymer, or a bioabsorbable polymer.

9. The system of Claim 1, wherein the catheter has a section of reduced external diameter substantially coextensive with the unreleased stent.

10. The system of Claim 1, wherein the middle section of the released stent is in substantially the same position as the middle section of the unreleased stent.

11. The system of Claim 1, wherein both the proximal and distal end sections of the stent are more closely wound.

12. The system of Claim 1, wherein the distal end section of the stent is more closely wound.

13. A stent delivery system for implanting a flexible, generally cylindrical, self-expandable vascular stent, comprising:

a catheter having distal and proximal ends, said catheter defining at least one lumen extending therethrough and having three longitudinally displaced openings or sets of openings extending from a lumen to the surface of the catheter,

a flexible, self-expandable coiled vascular stent having discrete proximal and distal end sections and a middle section, said stent being wound circumferentially around said catheter and coils of the stent being more closely wound at the proximal and distal end sections, and having restraining means holding to the catheter each of the proximal and distal end sections and the middle section, and

one or two release wires positioned in and extending longitudinally through at least one lumen, said release wires cooperating with the restraining means so that as the release wire or wires are withdrawn proximally, the proximal and distal end sections of the stent are released in such a manner that coils of the stent unwind and the length of the unwound stent is not substantially less than the length of the portion of the unreleased stent that is not closely wound.

14. The system of Claim 13, wherein each restraining means comprises a loop member having an opening therein.

15. The system of Claim 13, wherein the stent is comprised of superelastic shape memory alloy or a bioabsorbable polymer.

16. The system of Claim 13, where the middle section of the stent is in essentially the same position after release as it was before release.

17. A stent delivery system for implanting a flexible generally cylindrical, self-expandable coronary stent, comprising:

a catheter having distal and proximal ends, said catheter defining one or more lumens extending therethrough and having at least two longitudinally displaced openings or sets of openings each extending from a lumen to the surface of the catheter,

a flexible, self-expandable, coiled coronary stent having discrete proximal and distal end sections, said stent being wound circumferentially around said catheter and the coils of the distal end section of the stent being more tightly wound, and having two restraining means holding the proximal and distal end sections of the stent, respectively, to the catheter,

one or two release wires positioned in and extending longitudinally through at least one side lumen, and said restraining means extending through at least one of said openings to hold one or both

ends of the stent and thus to hold the stent in position, such that when the release wire or wires are pulled proximally, one or both of the ends of the stent are released from the restraining means to permit the stent to unwind and the length of the unwound stent is not substantially less than that of the portion of the un-released stent that is not more tightly wound.

18. The system of Claim 17, wherein each restraining means comprises a loop member having an opening therein.

19. The system of Claim 17, wherein the stent is comprised of superelastic shape memory alloy or a bioabsorbable polymer.

20. In a stent delivery system for implanting a flexible, generally cylindrical, self-expandable stent, which comprises a catheter having one or more lumens and two or more openings or sets of openings, at least one release wire extending through a lumen, and a flexible, self-expandable stent,

the improvement wherein one or more restraining loops extend from the stent to the release wire to hold the stent to the outer surface of the catheter, such that when the release wire or wires are pulled proximally the restraining loops disengage from the release wire or wires and the stent unwinds.

21. The system of Claim 20, wherein the restraining loops are bioabsorbable.

22. The system of Claim 20, wherein one or more restraining loops are still engaged with the stent after it unwinds.

23. The system of Claim 20, wherein one or more restraining loops disengage from the stent.

24. The system of Claim 20, wherein a restraining loop in the middle of the stent remains engaged with the stent and restraining loops at the proximal and distal ends of the stent disengage from the stent.

FIG.1

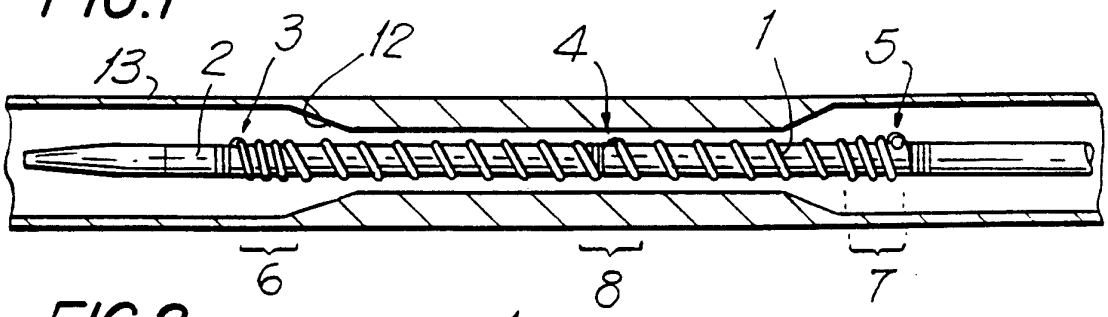

FIG.2

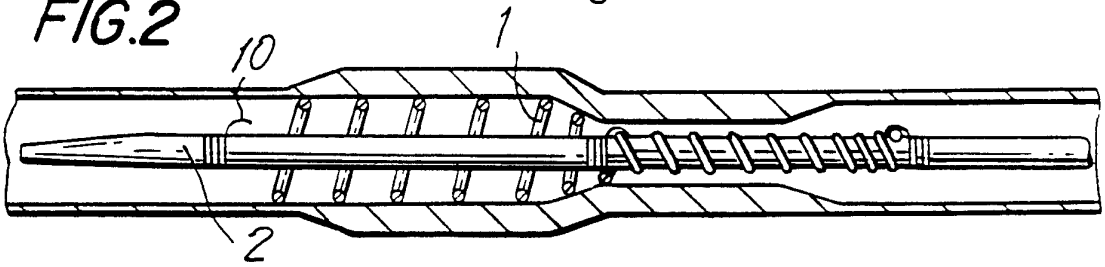

FIG.3

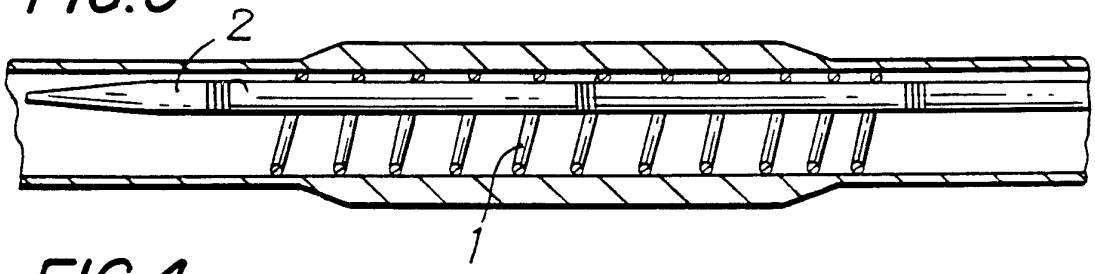

FIG.4

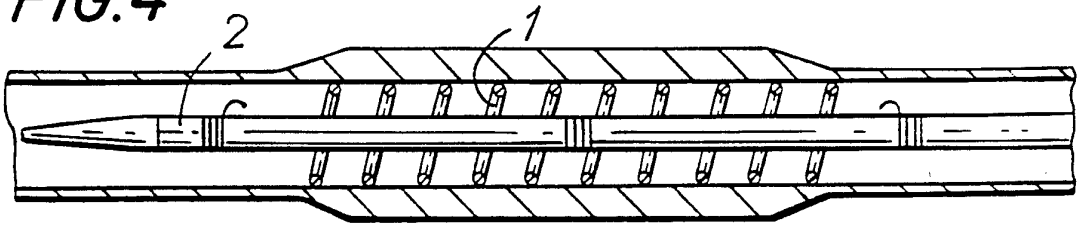

FIG.5

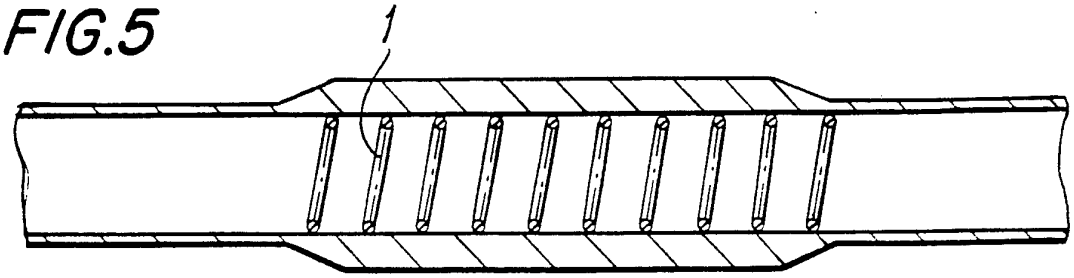

FIG.6

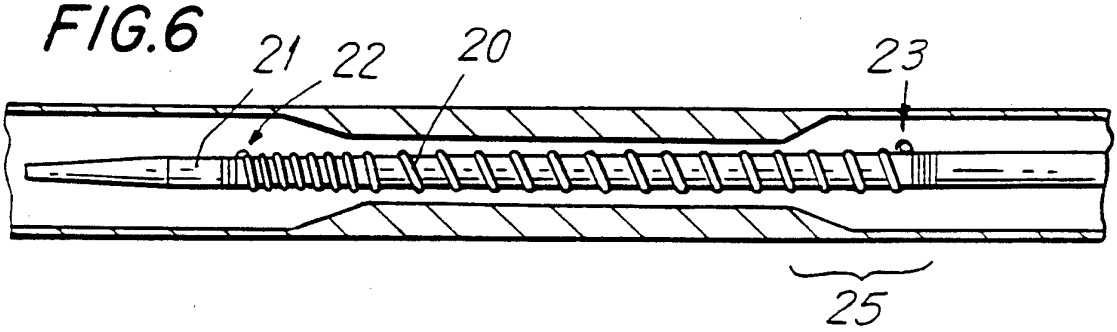

FIG.7

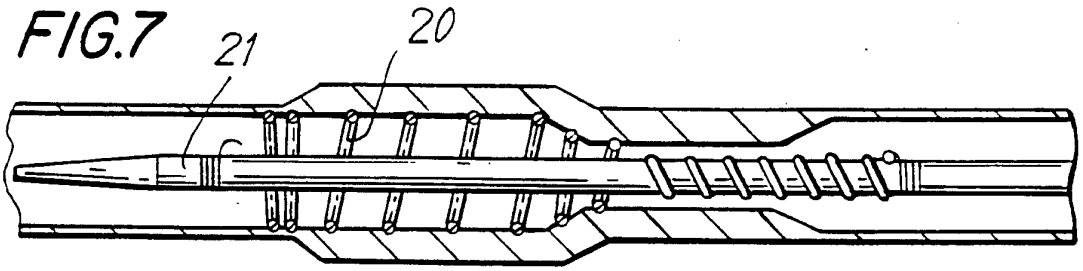

FIG.8

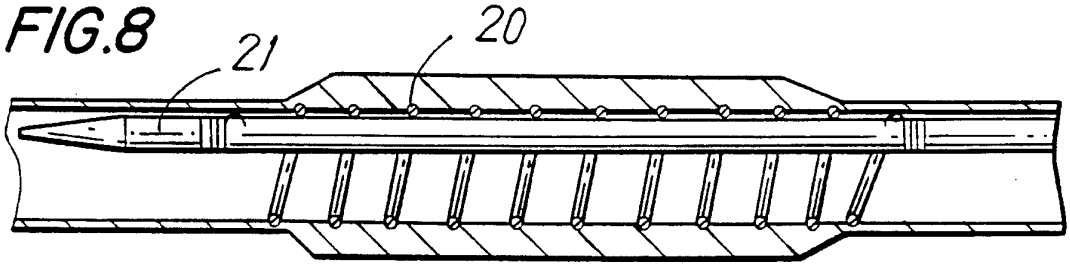

FIG.9

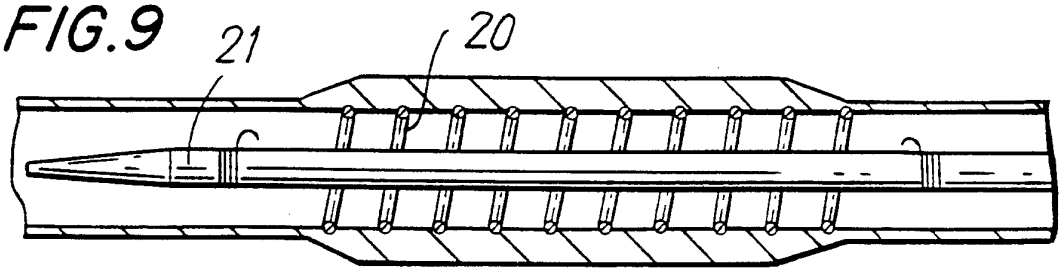

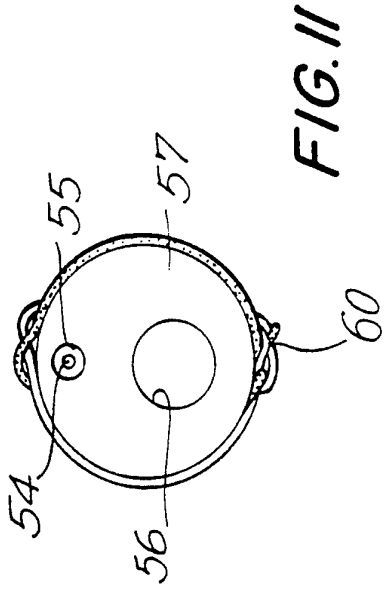

FIG. 11

FIG. 10

FIG. 12

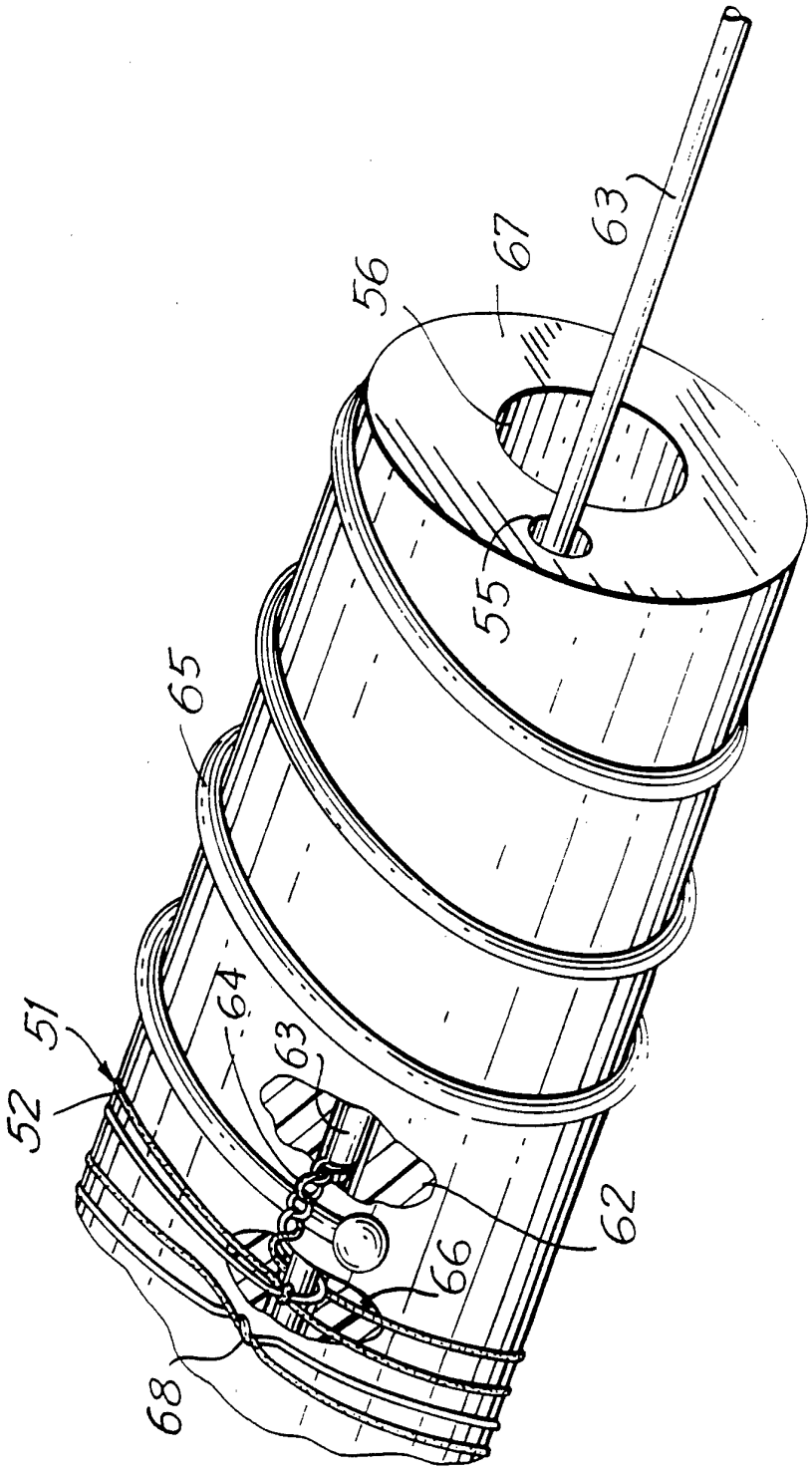

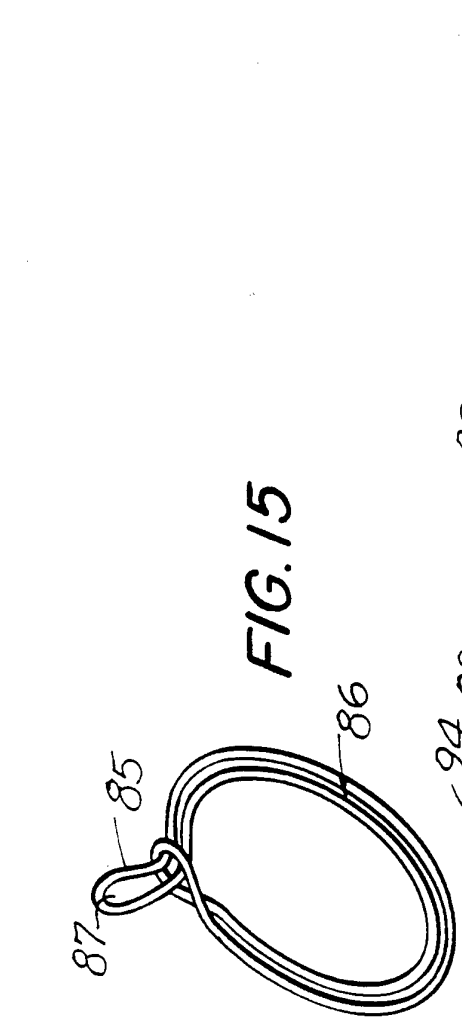

FIG. 13

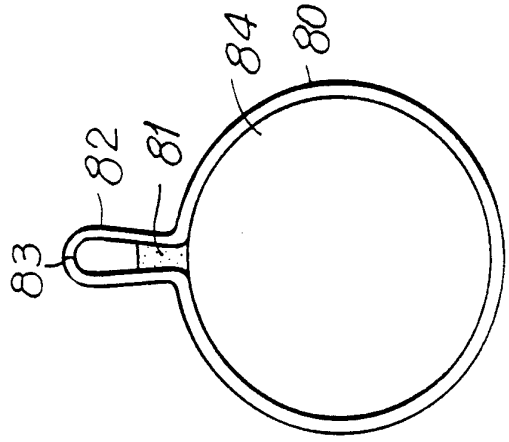

FIG. 14

FIG. 15

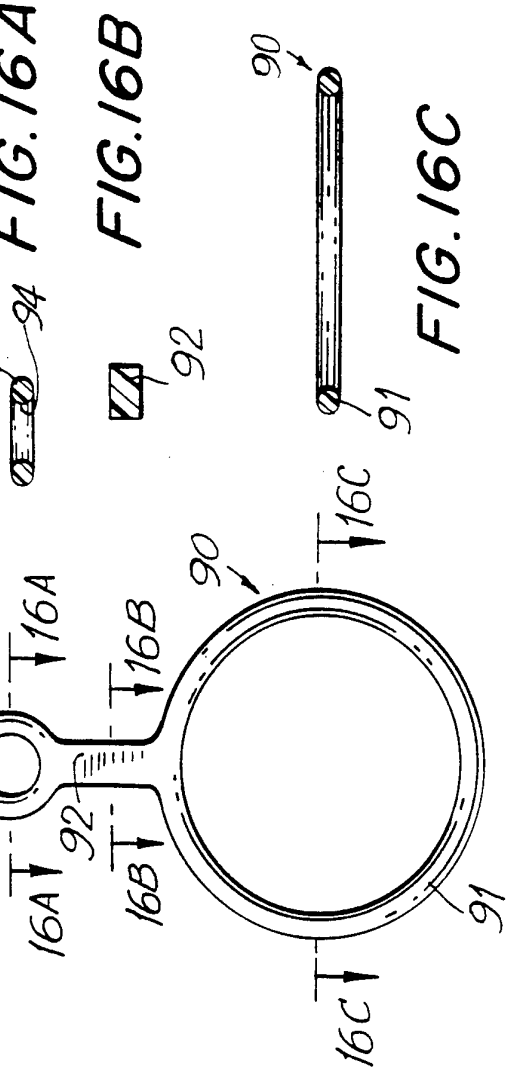

FIG. 16

FIG. 16A

FIG. 16B

FIG. 16C

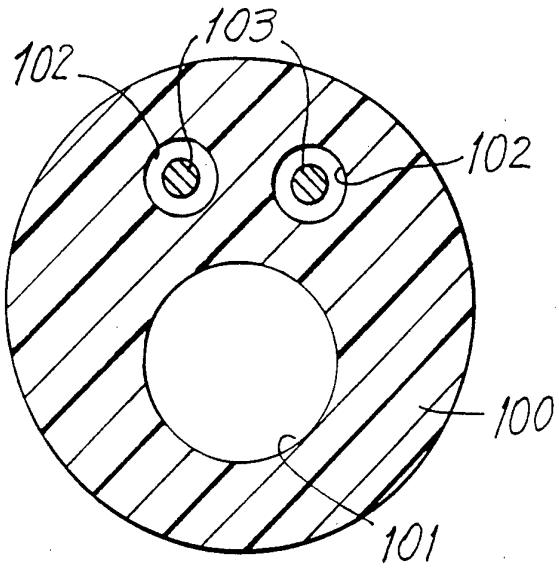

FIG. 17

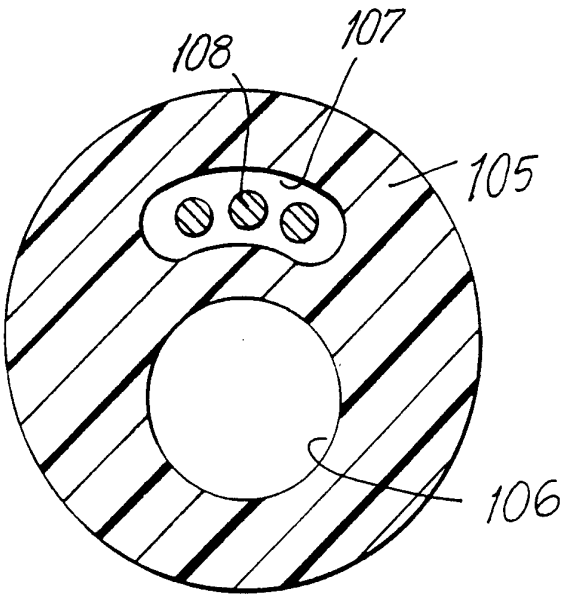

FIG 18

FIG. 19

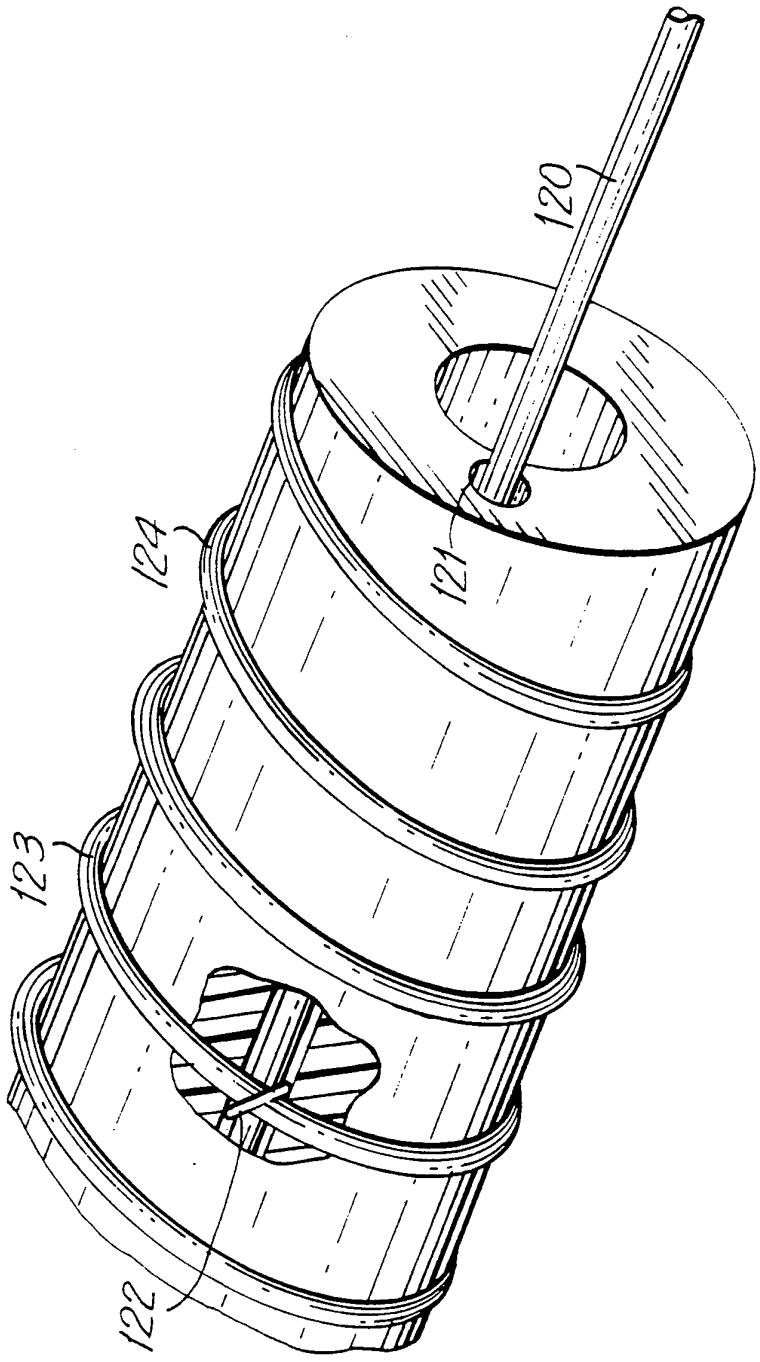

FIG. 20

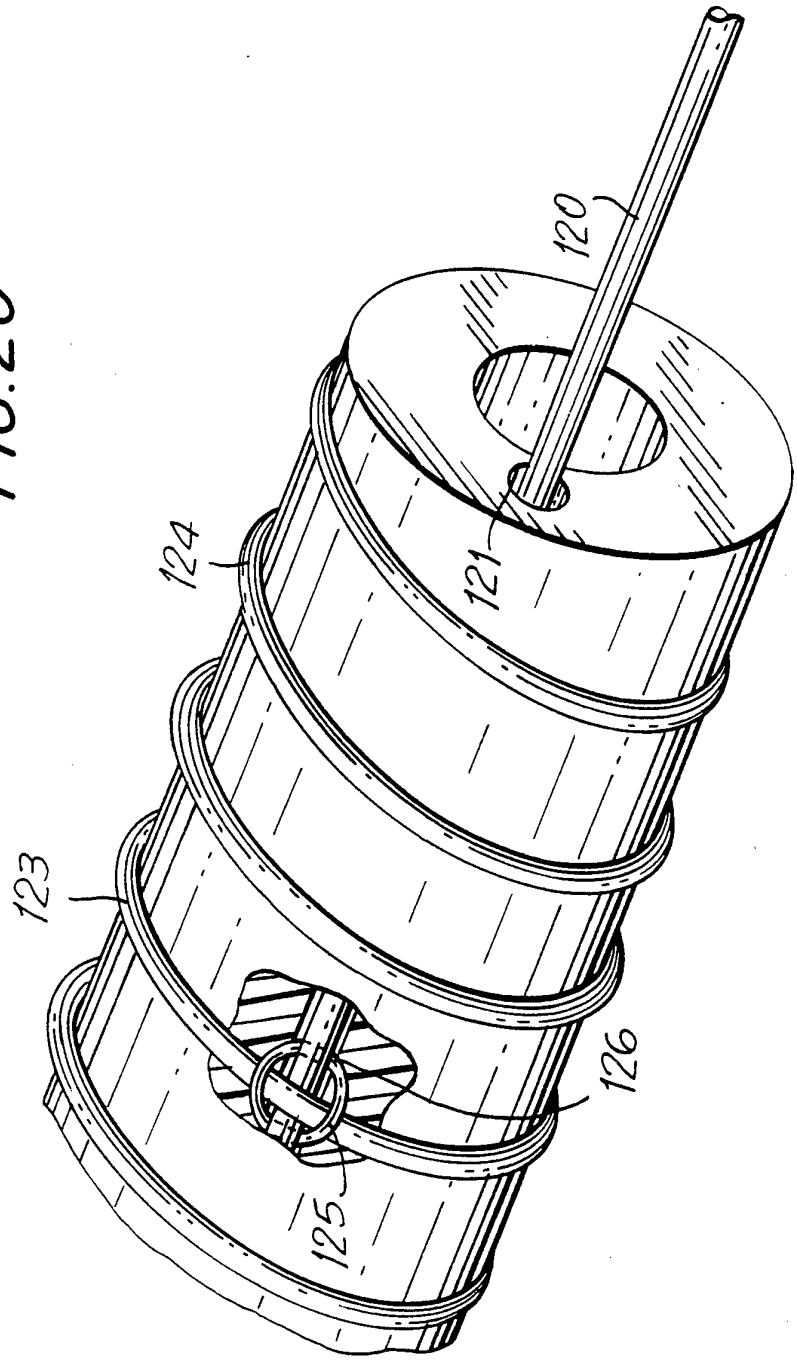

INTERNATIONAL SEARCH REPORT

International application No.
PCT/US94/00994

A. CLASSIFICATION OF SUBJECT MATTER

IPC(5) :A61B 17/00
US CL :606/108
According to International Patent Classification (IPC) or to both national classification and IPC

B. FIELDS SEARCHED

Minimum documentation searched (classification system followed by classification symbols)

U.S. : 606/108; 623/1, 12

Documentation searched other than minimum documentation to the extent that such documents are included in the fields searched

None

Electronic data base consulted during the international search (name of data base and, where practicable, search terms used)

None

C. DOCUMENTS CONSIDERED TO BE RELEVANT

Category*	Citation of document, with indication, where appropriate, of the relevant passages	Relevant to claim No.
X	US, A, 4,878,906, (LINDEMANN et al.), 07 November 1989. See entire document.	1-24
A	US, A, 4,913,141, (HILLSTEAD), 03 April 1990. See entire document	None

☐ Further documents are listed in the continuation of Box C. ☐ See patent family annex.

* Special categories of cited documents:	"T" later document published after the international filing date or priority date and not in conflict with the application but cited to understand the principle or theory underlying the invention
"A" document defining the general state of the art which is not considered to be part of particular relevance	"X" document of particular relevance; the claimed invention cannot be considered novel or cannot be considered to involve an inventive step when the document is taken alone
"E" earlier document published on or after the international filing date	"Y" document of particular relevance; the claimed invention cannot be considered to involve an inventive step when the document is combined with one or more other such documents, such combination being obvious to a person skilled in the art
"L" document which may throw doubts on priority claim(s) or which is cited to establish the publication date of another citation or other special reason (as specified)	"&" document member of the same patent family
"O" document referring to an oral disclosure, use, exhibition or other means	
"P" document published prior to the international filing date but later than the priority date claimed	

Date of the actual completion of the international search 05 APRIL 1994	Date of mailing of the international search report 04 MAY 1994
Name and mailing address of the ISA/US Commissioner of Patents and Trademarks Box PCT Washington, D.C. 20231 Facsimile No. (703) 305-3230	Authorized officer MICHAEL THALER Telephone No. (703) 308-2981

Form PCT/ISA/210 (second sheet)(July 1992)★